LI-OV7251M-FF
SPECIFICATION

Rev 1.0
Leopard Imaging Inc.

Downloaded from Arrow.com.

Contents

Version History 3

Key Information 4

Pin Assignment 5

Electrical Characteristics 6

1. Absolute Maximum Ratings 6

2. Functional temperature 6

3. DC Characteristics 7

4. Timing Characteristics 8

5. SCCB Timing 8

6. Format and Frame rate 9

7. Power Up Sequence 10

8. Power Down Sequence 12

Mechanical Drawing 16

Downloaded from Arrow.com.

Version History

Version	Description	Release Date
1.0	First Release	12. NOV. 2015

Downloaded from Arrow.com.

Key Information

Module Part#		LI-OV7251M-FF
Module Size		60.25 mm (L) x 6 mm (W) x 4.3 mm(H)
Sensor Type		OV7251
Array Size		640 x 480
Power Supply	core	1.5V
	analog	2.8V
	I/O	1.8V
Lens Size		1/7.5"
Focus(F.NO)		2.8
FOV (D)		39°
Focal Length		2.66 mm
Focusing Range		8 cm to 15 cm
TV Distortion		< 1 %
Sensitivity		7190 mV/ (uW.cm^{-2}.sec) @ 850nm; 2800 mV/ Lux-sec @ 530nm
Pixel size		3 um x 3 um
IR Cutter		No filter
Sensor Temperature Range	Operating	-30 ℃ to +70 ℃
	Stable Image	0 ℃ to +50 ℃
Output Formats		10-bit RAW or BW
Maximum Image Transfer Rate		640 x 480: 100fps
Dynamic Range		69.6 dB @ 8x gain
Max S/N ratio		39 dB
Scan mode		Progressive
Power Requirement	Active	117 mW @ 100 fps, VGA output
	Standby	15 uA for AVDD, 40 uA DOVDD without input clock, 700 uA for DOVDD with input clock
	XSHUTDOWN	5 uA for AVDD, 5uA for DOVDD
Interface		MIPI
Color / Mono		Monochrome

Downloaded from Arrow.com.

Pin Assignment

No.	Name	Pin type	Description
1	SDA	I/O	SCCB data
2	SCL	Input	SCCB input clock
3	DOVDD1.8V	Power	Power for I/O circuit
4	MCP	Output	MIPI clock positive output
5	MCN	Output	MIPI clock negative output
6	GND	Ground	
7	MDP	Output	MIPI data positive output
8	MDN	Output	MIPI data negative output
9	GND	Ground	
10	STROBE	I/O	Strobe output
11	ULPM	Output	ULPM open-drain output
12	GND	Ground	
13	PWM	I/O	PWM output
14	NC		
15	GND	Ground	
16	FSIN	I/O	FSIN input
17	NC		
18	DVDD1.5V	Power	Power for digital core
19	XCLK	Input	System input clock
20	NC		
21	RESET	Input	Reset (active low with internal pull-up resistor)
22	AVDD2.8V	Power	Analog power
23	NC		
24	GND	Ground	

Downloaded from Arrow.com.

Electrical Characteristics

1. Absolute Maximum Ratings

parameter		absolute maximum rating[a]
ambient storage temperature		-40°C to +125°C
supply voltage (with respect to ground)	V_{DD-A}	4.5V
	V_{DD-D}	3V
	V_{DD-IO}	4.5V
electro-static discharge (ESD)	human body model	2000V
	machine model	200V
all input/output voltages (with respect to ground)		-0.3V to V_{DD-IO} + 1V
I/O current on any input or output pin		± 200 mA
peak solder temperature (10 second dwell time)		245°C

a. exceeding the absolute maximum ratings shown above invalidates all AC and DC electrical specifications and may result in permanent damage to the device. Exposure to absolute maximum rated conditions for extended periods may affect device reliability.

2. Functional temperature

parameter	range
operating temperature[a]	-30°C to +70°C junction temperature
stable image temperature[b]	0°C to +50°C junction temperature

a. sensor functions but image quality may be noticeably different at temperatures outside of stable image range

b. image quality remains stable throughout this temperature range

Downloaded from Arrow.com.

3. DC Characteristics (T_A < 23 ℃ +/- 2 ℃)

symbol	parameter	min	typ	max	unit
supply					
V_{DD-A}	supply voltage (analog)	2.6	2.8	3.0	V
V_{DD-IO}	supply voltage (digital I/O)	1.7	1.8	3.0	V
I_{DD-A}	active (operating) current[a]	12	16	20	mA
I_{DD-IO}		28	40	55	mA
$I_{DDS-SCCB}$[b]	standby current	0.50	1.2	1.5	mA
$I_{DDS-SCCB}$		20	50	100	µA
$I_{DDS-XSHUTDOWN}$		2	10	30	µA
digital inputs (typical conditions: AVDD = 2.8V, DVDD = 1.5V, DOVDD = 1.8V)					
V_{IL}	input voltage LOW			0.54	V
V_{IH}	input voltage HIGH	1.26			V
C_{IN}	input capacitor			10	pF
digital outputs (standard loading 25 pF)					
V_{OH}	output voltage HIGH	1.62			V
V_{OL}	output voltage LOW			0.18	V
serial interface inputs					
V_{IL}[c]	SIOC and SIOD	-0.5	0	0.54	V
V_{IH}	SIOC and SIOD	1.28	1.8	3.0	V

a. 640x480 @ 100fps

b. with XVCLK

c. based on DOVDD = 1.8V

Downloaded from Arrow.com.

4. Timing Characteristics

symbol	parameter	min	typ	max	unit
oscillator and clock input					
f_{osc}	frequency (EXTCLK)	6	24	27	MHz
t_r, t_f	clock input rise/fall time			5 (10[a])	ns

a. if using internal PLL

5. SCCB timing

a. SCCB interface timing

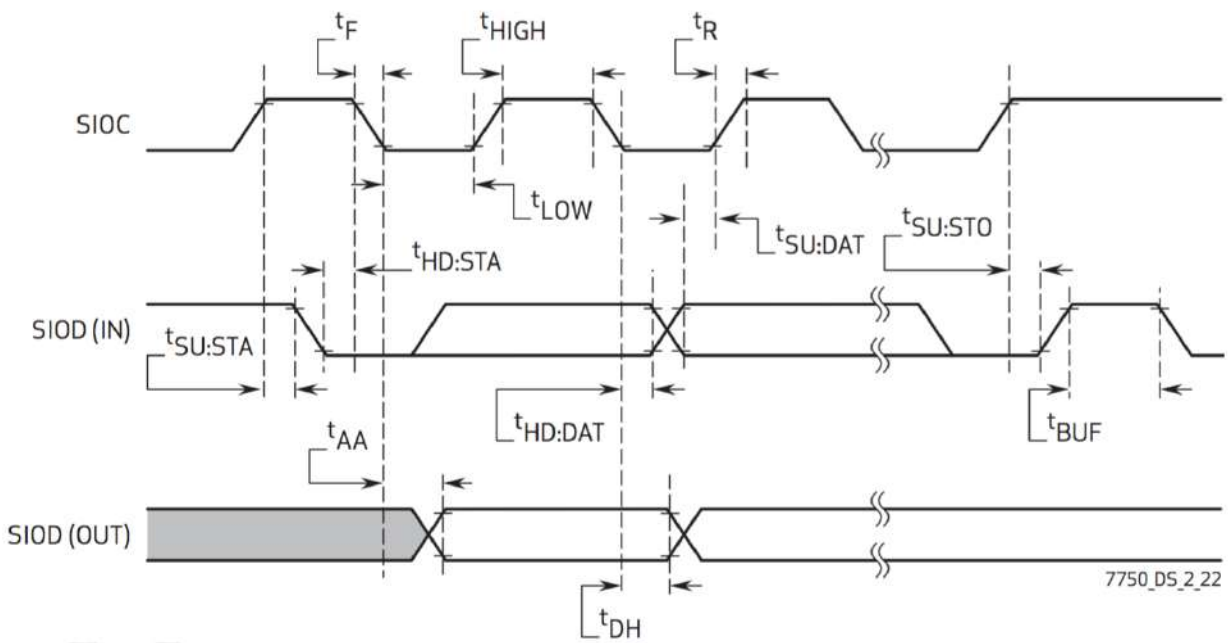

Downloaded from Arrow.com.

b. SCCB interface timing Specification[ab]

symbol	parameter	min	typ	max	unit
f_{SIOC}	clock frequency			400	kHz
t_{LOW}	clock low period	1.3			µs
t_{HIGH}	clock high period	0.6			µs
t_{AA}	SIOC low to data out valid	0.1		0.9	µs
t_{BUF}	bus free time before new start	1.3			µs
$t_{HD:STA}$	start condition hold time	0.6			µs
$t_{SU:STA}$	start condition setup time	0.6			µs
$t_{HD:DAT}$	data in hold time	0			µs
$t_{SU:DAT}$	data in setup time	0.1			µs
$t_{SU:STO}$	stop condition setup time	0.6			µs
t_R, t_F	SCCB rise/fall times			0.3	µs
t_{DH}	data out hold time	0.05			µs

a. SCCB timing is based on 400kHz mode

b. timing measurement shown at the beginning of the rising edge or the end of the falling edge signifies 30%, timing measurement shown in the middle of the rising/falling edge signifies 50%, timing measurement shown at the beginning of the falling edge or the end of the rising edge signifies 70%

6. Format and frame rate

format[a]	resolution	max frame rate	methodology	typical MIPI data rate
full resolution	640x480	100 fps	full	1-lane @ 800Mbps
320x240	320x240	180 fps	2x2 binning, 2:1 sub-sampling	1-lane @ 800Mbps
160x120	160x120	360 fps	4:1 sub-sampling	1-lane @ 800Mbps

a. all formats with minimum 4 dummy lines and 4 dummy pixels

Downloaded from Arrow.com.

7. Power Up Sequence

case	DVDD	XSHUTDOWN	power up sequence requirement
1	internal	GPIO	Refer to **figure 2-7** 1. AVDD rising can occur before or after DOVDD rising as long as they are rising before XSHUTDOWN rising 2. XSHUTDOWN is pulled up after AVDD and DOVDD are stable
2	external	GPIO	Refer to **figure 2-8** 1. AVDD rising can occur before or after DOVDD rising as long as they are rising before XSHUTDOWN rising 2. XSHUTDOWN is pulled up after AVDD and DOVDD are stable 3. DVDD rises after DOVDD, but before XSHUTDOWN is pulled high

a. Power Up Sequence (case 1)

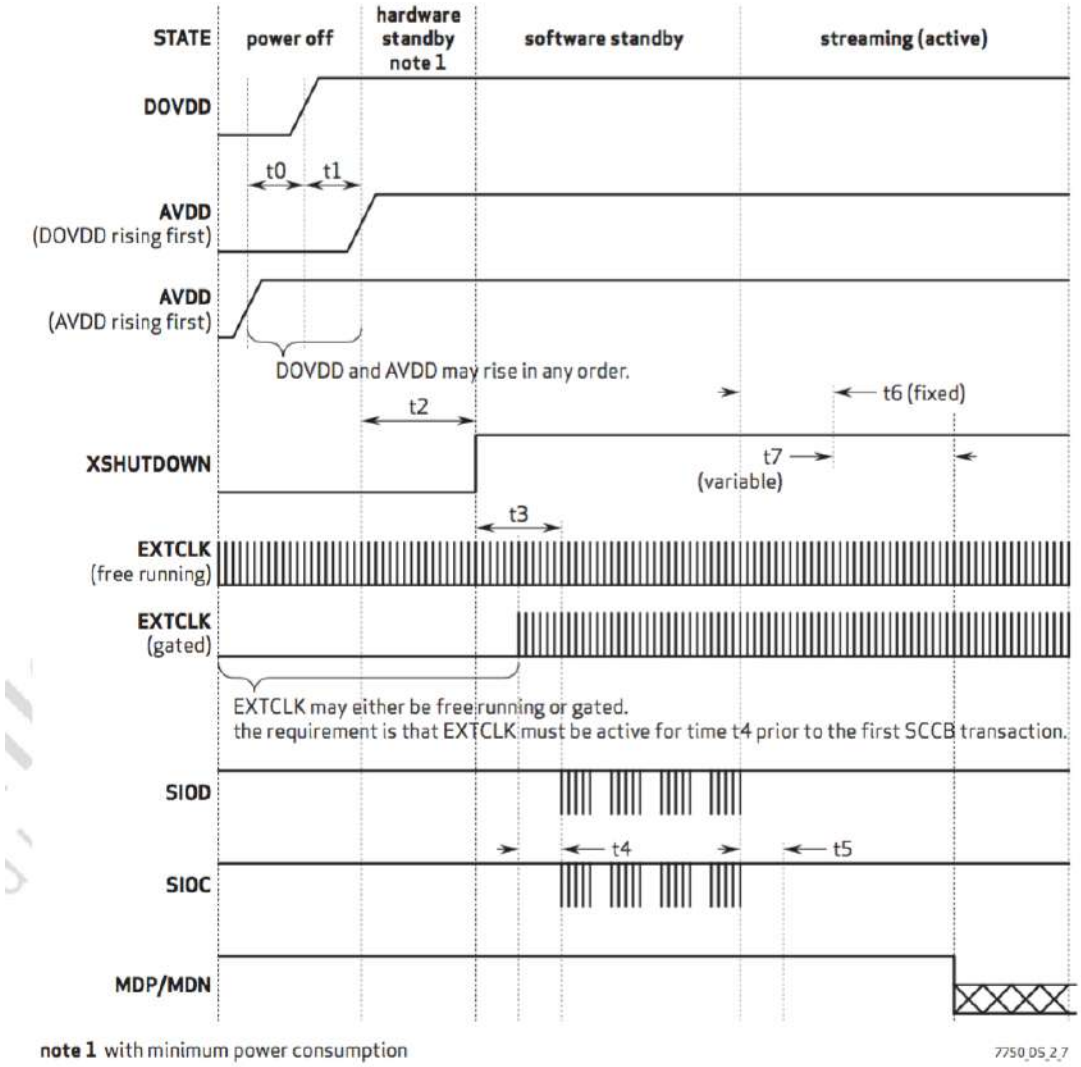

Figure 2-7

Downloaded from Arrow.com.

b. Power Up Sequence (case 2)

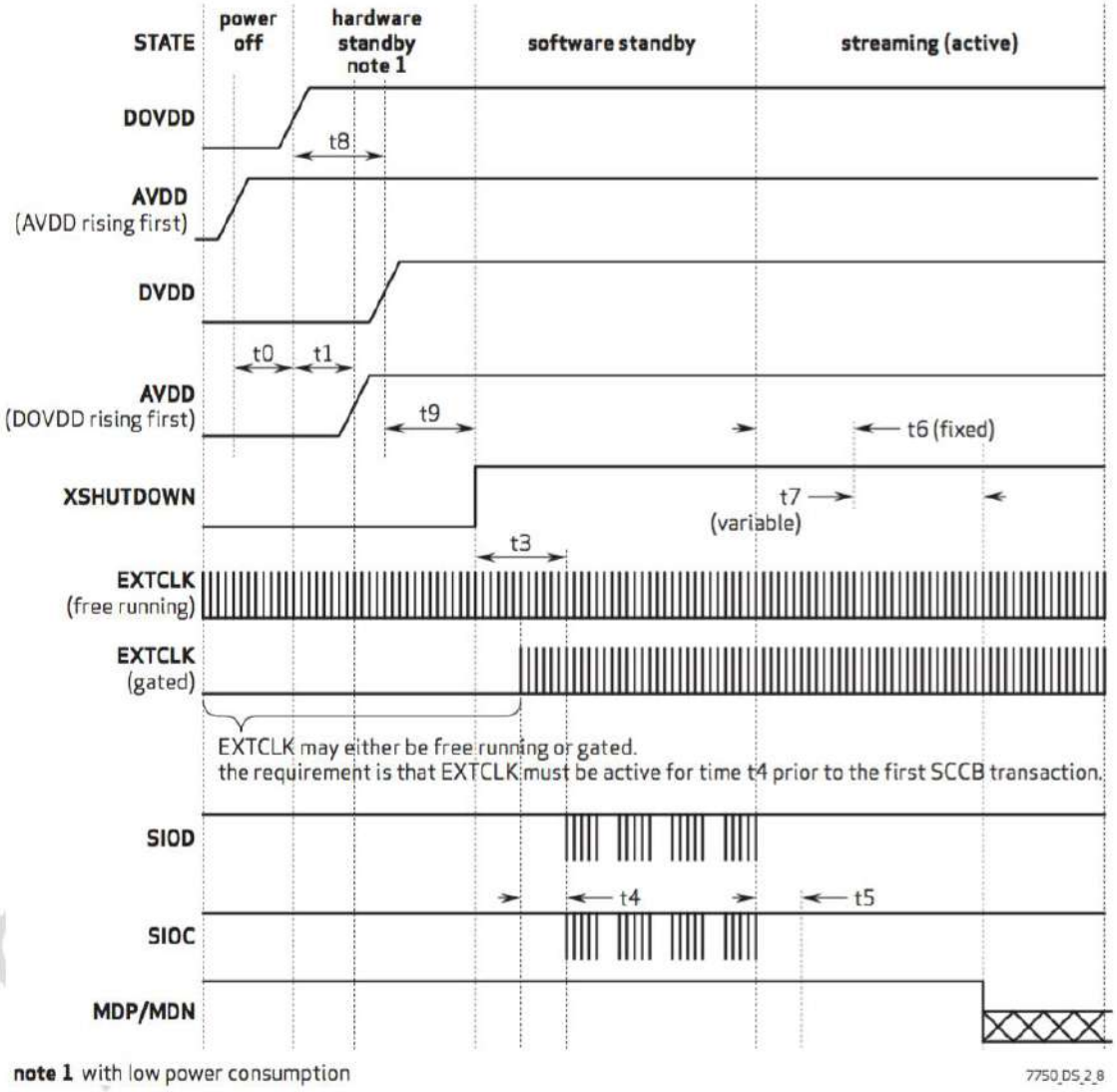

Figure 2-8

Downloaded from Arrow.com.

c. Power Up Sequence Timing Constraints

constraint	label	min	max	unit
AVDD rising – DOVDD rising	t0	0	∞	ms
DOVDD rising – AVDD rising	t1			ms
AVDD or DOVDD rising, whichever is last – XSHUTDOWN rising	t2	1		ms
XSHUTDOWN rising – first SCCB transaction	t3	8192		EXTCLK cycles
minimum number of EXTCLK cycles prior to the first SCCB transaction	t4	8192		EXTCLK cycles
PLL start up/lock time	t5		0.2	ms
entering streaming mode – first frame start sequence (fixed part)	t6		10	ms
entering streaming mode – first frame start sequence (variable part)	t7	delay is the exposure time value		lines
DOVDD to external DVD rising	t8	0		ms
DOVDD rising to XSHUTDOWN rising	t9	0		ms

8. Power Down Sequence

case	DVDD	XSHUTDOWN	power down sequence requirement
1	internal	GPIO	Refer to **figure 2-9** 1. software standby recommended 2. pull XSHUTDOWN low for minimum power consumption 3. AVDD and DOVDD may fall in any order
2	external	GPIO	Refer to **figure 2-10** 1. software standby recommended 2. pull XSHUTDOWN low for minimum power consumption 3. pull DVDD low 4. AVDD and DOVDD may fall in any order

Downloaded from Arrow.com.

a. Power Down Sequence (case 1)

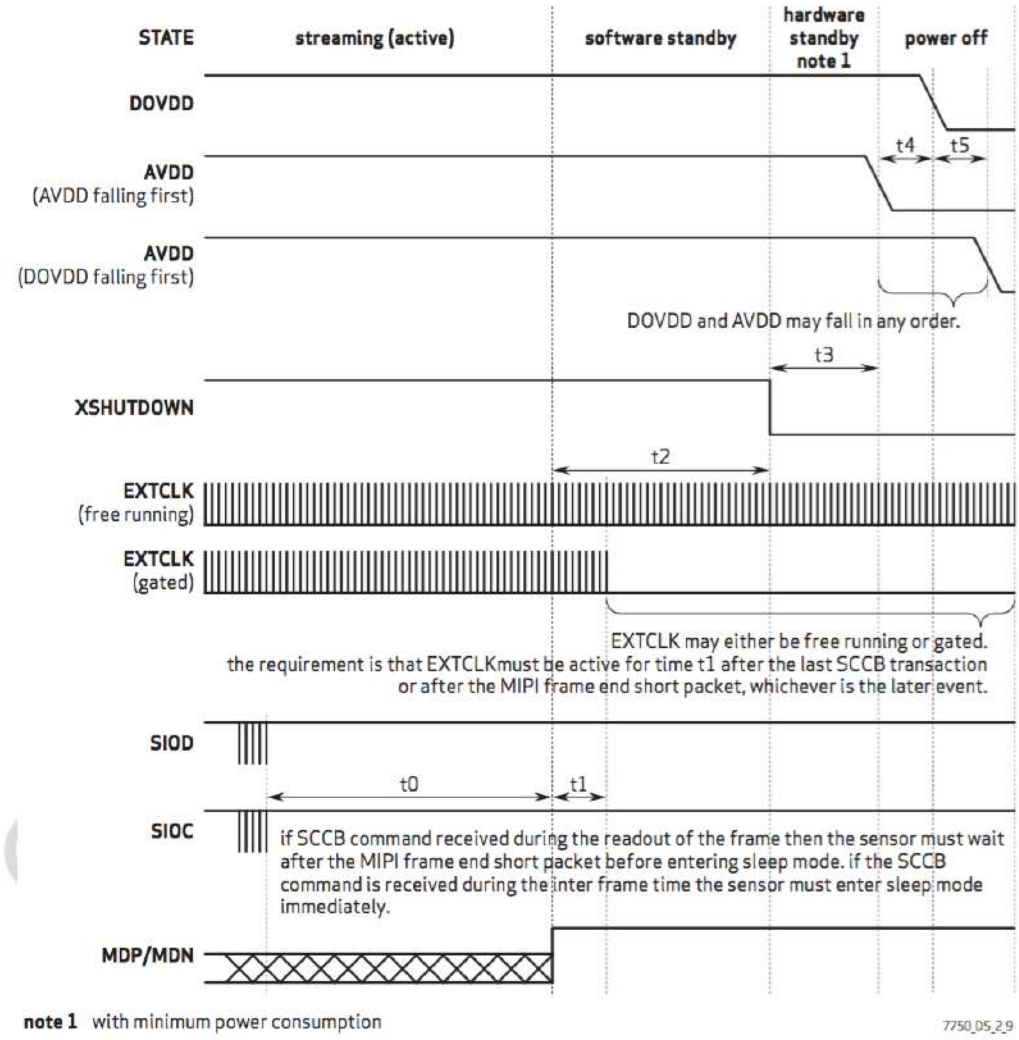

Figure 2-9

Downloaded from Arrow.com.

b. Power Down Sequence (case 2)

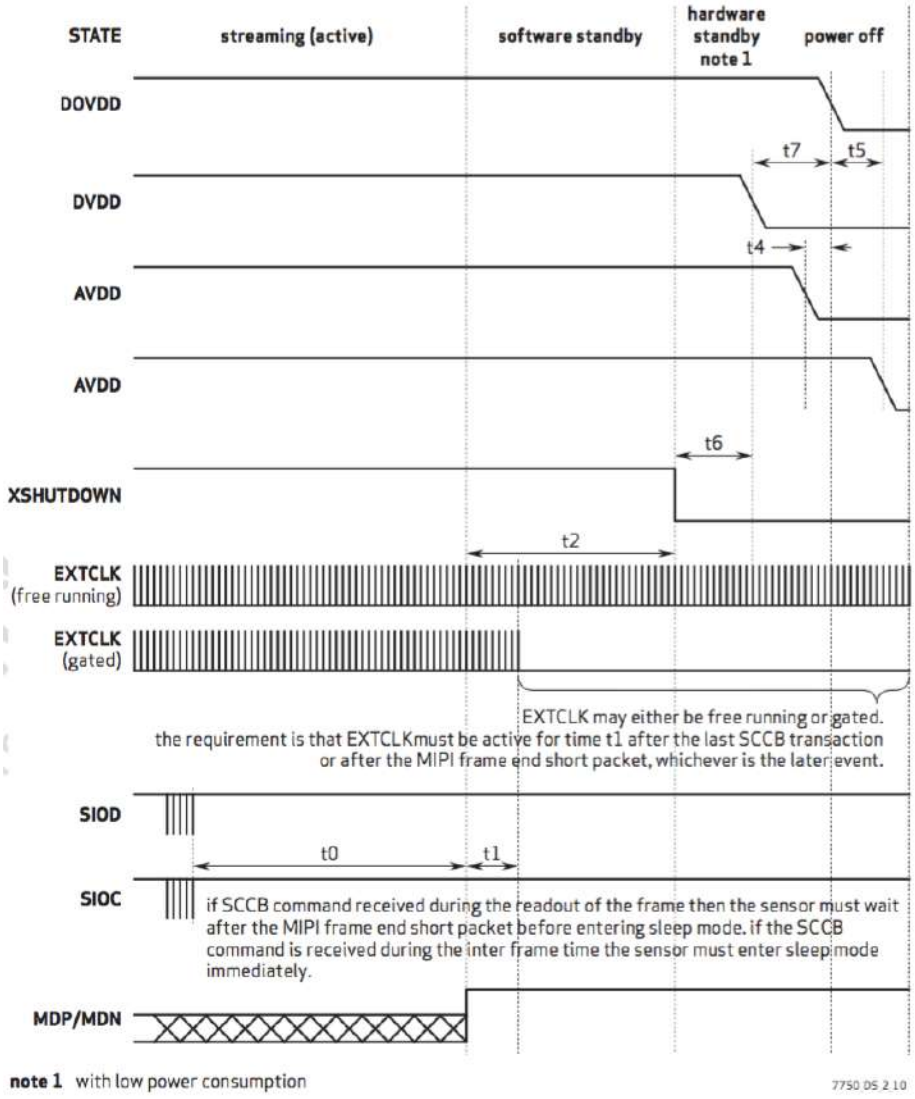

Figure 2-10

Downloaded from Arrow.com.

c. Power Down Sequence Timing Constraints

constraint	label	min	max	unit
enter software standby SCCB command device in software standby mode	t0	when a frame of MIPI data is output, wait for the MIPI end code before entering the software for standby; otherwise, enter the software standby mode immediately		
minimum of EXTCLK cycles after the last SCCB transaction or MIPI frame end	t1	512		EXTCLK cycles
last SCCB transaction or MIPI frame end, XSHUTDOWN falling	t2	512		EXTCLK cycles
XSHUTDOWN falling - AVDD falling or DOVDD falling whichever is first	t3	0.0		ms
AVDD falling - DOVDD falling	t4	AVDD and DOVDD may fall in any order, the falling separation can vary from 0 ns to infinity		ms
DOVDD falling - AVDD falling	t5			ms
XSHUTDOWN falling - DVDD falling	t6	0		ms
DVDD falling to DOVDD falling	t7	0		ms

Downloaded from Arrow.com.

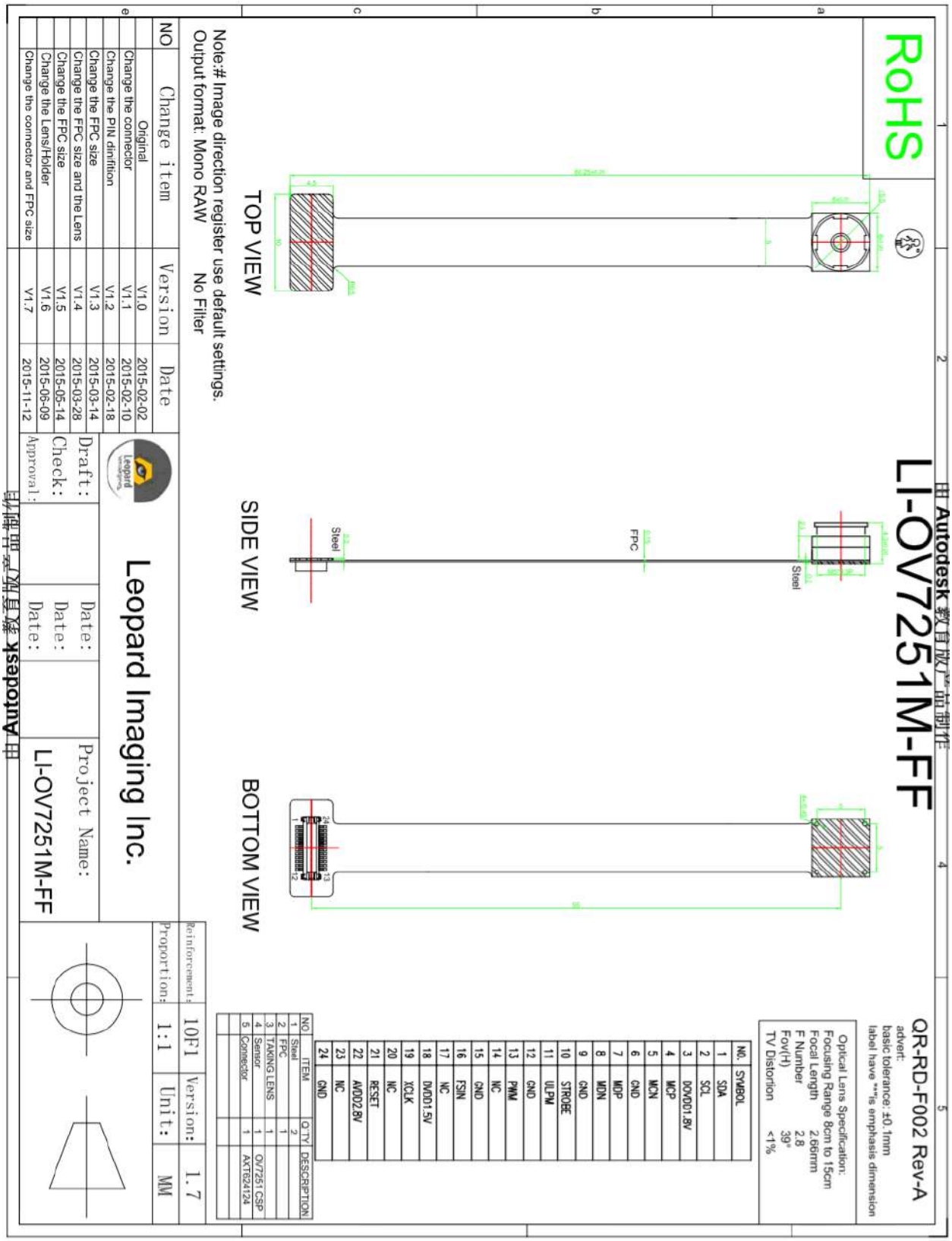

Downloaded from Arrow.com.