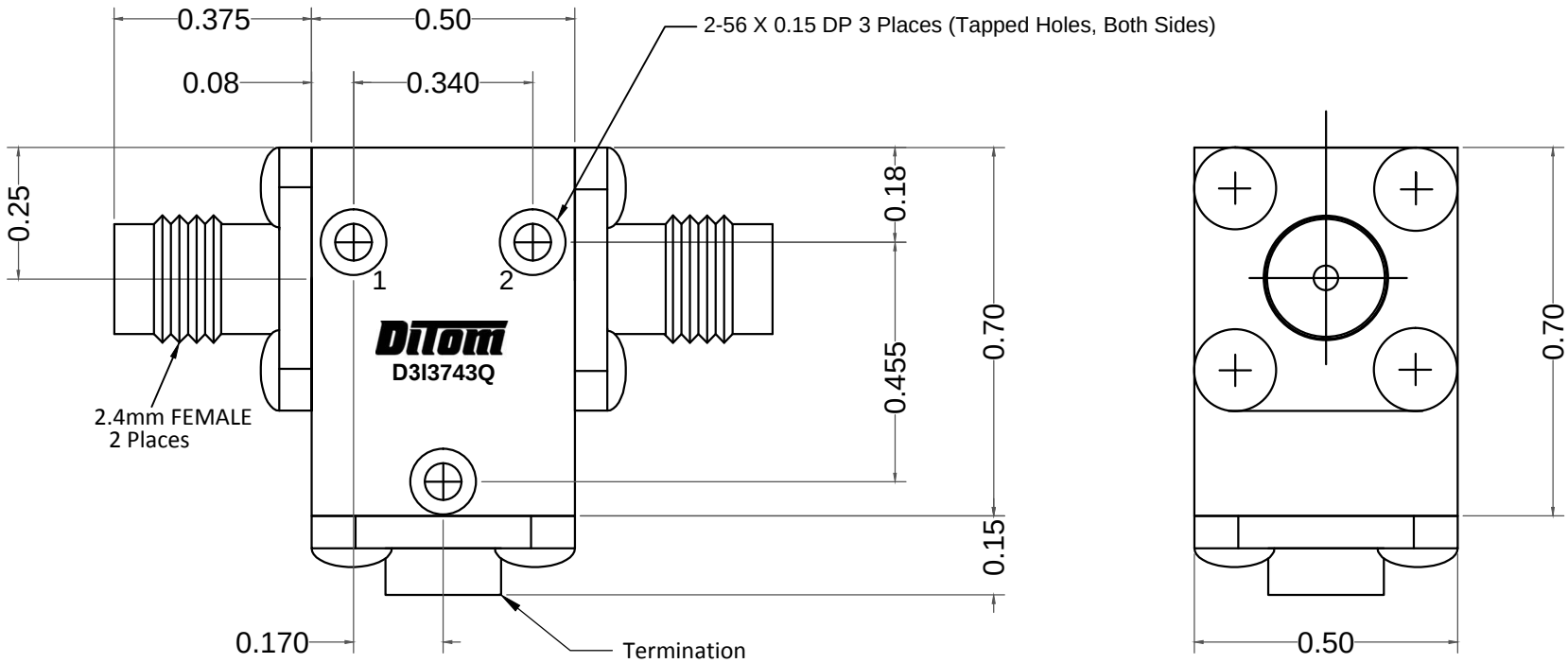

ELECTRICAL SPECIFICATIONS

FREQUENCY RANGE (GHz):	37.00 - 43.00	
ISOLATION (dB):	14	MIN
INSERTION LOSS (dB):	1.2	MAX
VSWR:	1.35	MAX
POWER: AVG (PORT 1 TO 2):	5W	
REFLECTIVE POWER (TERM):	2W	
PEAK:	30W	

MECHANICAL SPECIFICATIONS

CONNECTORS:	2.4mm FEMALE, PASSIVATED STAINLESS STEEL
CONTACT PINS:	BERYLLIUM COPPER, GOLD PLATE
OPERATING TEMPERATURE:	-20° to +65°C
WEIGHT (APPROX):	0.90 OUNCES

DIMENSIONS IN INCHES, UNLESS OTHERWISE SPECIFIED	DiTom MICROWAVE INC. Fresno, California, USA
TOLERANCE XX±0.03 XXX±0.010	TITLE 37.00 - 43.00 GHz 2.4mm Isolator
SCALE 6:1	MODEL NO D3I3743Q REV

Downloaded from Arrow.com.