THIS DRAWING IS UNPUBLISHED. RELEASED FOR PUBLICATION - ,- .
© COPYRIGHT - BY TYCO ELECTRONICS CORPORATION. ALL RIGHTS RESERVED.

LOC	DIST
GP	00

REVISIONS

P	LTR	DESCRIPTION	DATE	DWN	APVD
	B	REVISED PER ECO-08-007327	09APR08	BM	WM

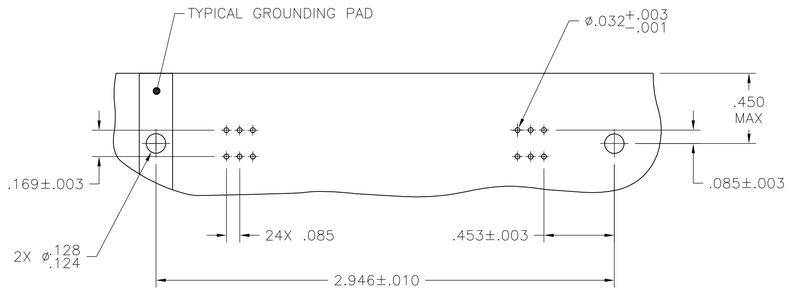

SUGGESTED PRINTED CIRCUIT BOARD MOUNTING DIIMENSIONS

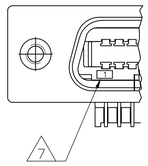

DETAIL B 5
REVERSE ORIENTATION

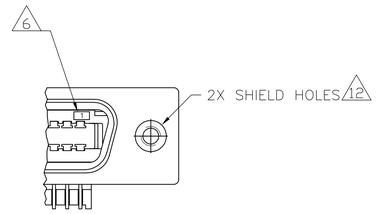

DETAIL A 5
STANDARD ORIENTATION

1. MATERIAL:
HOUSING, BRACKET, ADAPTER COMB AND TERMINAL SUPPORT PLATE: POLYESTER.
MOLDING COMPOUND: UL94V-0 RATING, BLACK.
SHIELD: BRIGHT NICKEL OVER COPPER, PLATED DIE CASTING,
TERMINALS – HIGH STRENGTH COPPER ALLOY PLATED WITH EITHER .000030 MIN GOLD PLATE OR GOLD FLASH OVER PALLADIUM NICKEL PLATE, .000030 MIN TOTAL ON MATING SURFACE. .000120 MIN TIN PLATE ON TAILS. ALL OVER .000050 MIN NICKEL UNDERPLATE OVER ENTIRE TERMINAL.

2. THE CONTACT SURFACES OF THE TERMINALS ARE COATED WITH LUBRICANT.

3. CENTER-TO-CENTER SPACING OF TERMINALS IS .085 NOMINAL.

4. ALL DIMENSIONS SHOWN ARE MAXIMUM UNLESS OTHERWISE SPECIFIED.

5. DETAILS A & B ARE VIEWED FROM MATING SIDE OF RECEPTACLE ASSEMBLY.

6. TERMINAL 1 IS LOCATED IN THIS ROW FOR STANDARD ORIENTATION.

7. TERMINAL 1 IS LOCATED IN THIS ROW FOR REVERSE ORIENTATION.

8. SCREWS SHOWN FOR REFERENCE ONLY, RECOMMENDED HARDWARE KIT 5554272-1 FOR USE WITH PART NUMBER 5553813-3 & 4. WHEN SCREW LOCK FEATURE IS REQUIRED.

9. SHIELD IS ASSEMBLED TO CONNECTOR BEFORE SHIPMENT.

10. PANEL THICKNESS RANGE: .062 MAX.

11. STAINLESS STEEL SCREWS RECOMMENDED, BECAUSE OF CONTACT WITH SOLDER BATH.

12. HOLES TO BE TAPPED AFTER PLATING.

13. USE HARDWARE KIT 554818-2 FOR PART NUMBERS 5553813-3 & 4. WHEN BAIL LOCK FEATURE IS REQUIRED.

14. THE BAIL LOCK FEATURE HAS APPLICATION FOR SMALL COMPUTER SYSTEMS INTERFACE (SCSI).

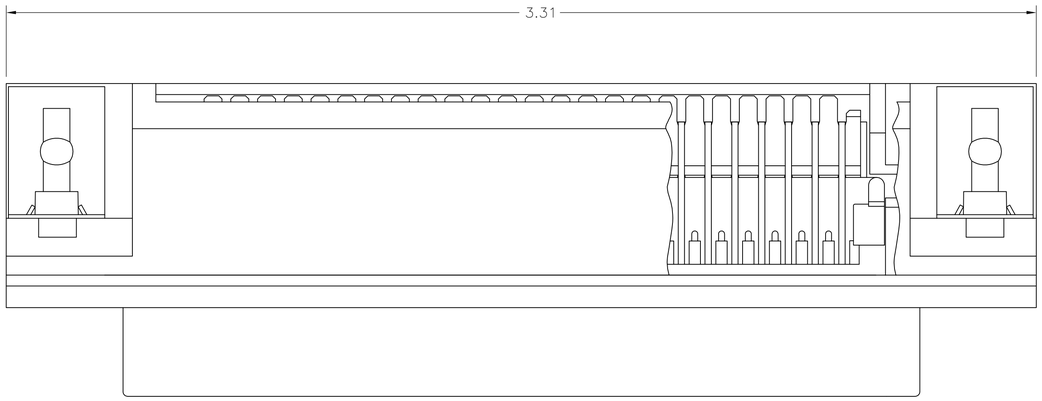

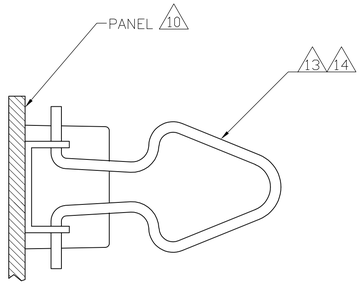

DETAIL D
SAME AS DETAIL C EXCEPT FOR
BAIL LOCK FEATURE (SCSI)
SCALE 4:1

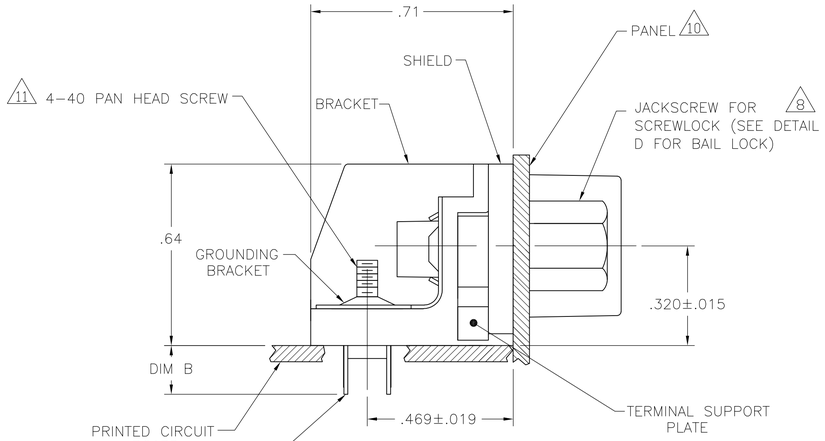

DETAIL C
REAR PANEL MOUNTING DETAIL
SHOWN FOR REFERENCE ONLY
SCALE 4:1

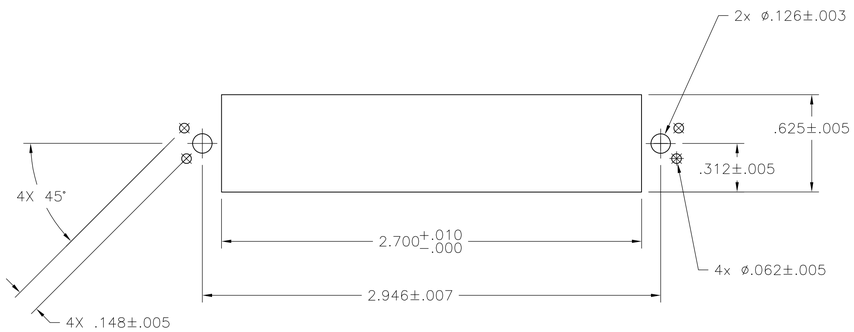

SUGGESTED PANEL CUTOUT FOR
BAIL LOCK FEATURE (SCSI) 13

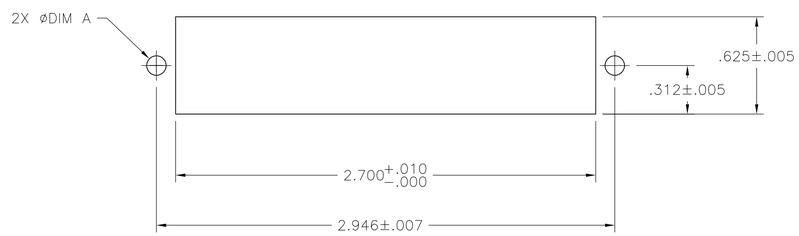

SUGGESTED PANEL CUTOUT FOR
SCREW LOCK FEATURE 8

DIM B TERMINALS	DIM A HOLE	SHIELD HOLE SIZE	ORIENTATION	DETAIL	PART NUMBER
.157±.015	.126±.003	4-40 UNC-2B	REVERSE	B	5553813-4
.157±.015	.126±.003	4-40 UNC-2B	STANDARD	A	5553813-3

THIS DRAWING IS A CONTROLLED DOCUMENT.

DIMENSIONS: INCHES

TOLERANCES UNLESS OTHERWISE SPECIFIED:
0 PLC ± –
1 PLC ± –
2 PLC ± –
3 PLC ± –
4 PLC ± –
ANGLES ± –

MATERIAL 1 FINISH 1

DWN B. MCMASTER 10AUG05
CHK W. MILLHIMES 10AUG05
APVD M. WALMSLEY 10AUG05

PRODUCT SPEC —
APPLICATION SPEC —
WEIGHT —

Tyco Electronics
Tyco Electronics Corporation
Harrisburg, PA 17105-3608

NAME
RECEPTACLE ASSEMBLY, SHIELDED, 50 POSITION, BAIL LOCK, RIGHT ANGLE, WITH GROUND BRACKET, CHAMP

SIZE	CAGE CODE	DRAWING NO	RESTRICTED TO
A1	00779	C-5553813	—

CUSTOMER DRAWING | SCALE 2:1 | SHEET 1 OF 1 | REV B

AMP 4805 REV 31MAR2000

Downloaded from Arrow.com.