MICRO SWITCH
a Honeywell Division
FED.MFG.CODE 91929

SWITCH – BASIC

CATALOG LISTING
WA–1RVX051–A4

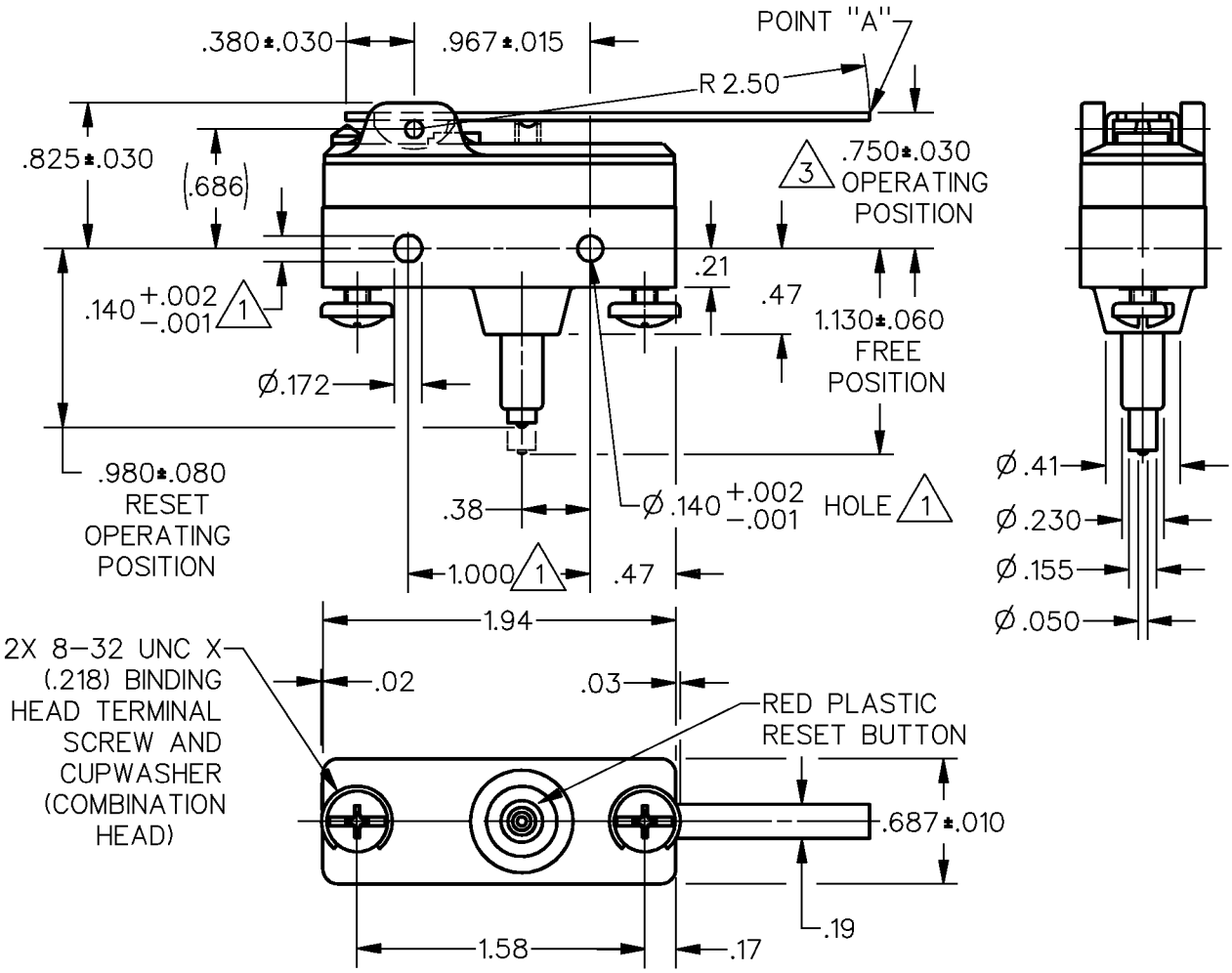

NOTES

1. MOUNTING HOLES WILL ACCEPT PINS OR SCREWS OF Ø.139 MAX ON 1.000 CENTERS
2. – SWITCH WILL NOT RECYCLE OR ACT AS A MOMENTARY ACTION SWITCH IF LEVER IS RELEASED WHEN RESET PLUNGER IS CONTINUALLY DEPRESSED
3. FORCES MEASURED WITH LEVER IN VERTICAL POSITION AND WITH CONTACT END DOWN
4. – PLASTIC MATERIAL USED:
   CASE–––––PLENCO 06343 NORMALIZED 6 HRS AT 300°–325°F
   COVER––––PLENCO 06343 NORMALIZED 6 HRS AT 300°–325°F
   PLUNGER–––PLENCO 04300 NORMALIZED 6 HRS AT 300°–325°F

ANSI Y14.5M–1982 APPLIES

THIS DRAWING COVERS A PROPRIETARY ITEM AND IS THE PROPERTY OF MICRO SWITCH, A DIVISION OF HONEYWELL. THIS DRAWING IS NOT TO BE COPIED OR USED WITHOUT THE APPROVAL OF MICRO SWITCH.

THIRD ANGLE PROJECTION

CHARACTERISTICS AT POINT "A"	ELECTRICAL DATA	SCALE FULL	DO NOT SCALE PRINT
OPERATING FORCE – – – 2 OZ MAX 3	CONTACT ARRANGEMENT S P N C – MAINTAINED CONTACT	UNLESS OTHERWISE SPECIFIED TOLERANCES ARE	
OVERTRAVEL – – – – – – – .075 MIN		ONE PLACE (.0) ±.030	
		TWO PLACE (.00) ±.015	
RESET CHARACTERISTICS		THREE PLACE (.000) ±.005	
OPERATING FORCE– – – – 32 OZ MAX		ANGLES ±	
OVERTRAVEL – – – – – – – .040 MIN		WEIGHT	

X90358–WA
REPLACES
RELEASE NO. PR–20267
CATALOG LISTING WA–1RVX051–A4
PAGE 1 OF 1
ISSUE 4
CHECK
CHECK
CHECK
DRAWN GRT 1 OCT 92
DDM/CAD

REVISIONS
A C073497 DHD 13 NOV 92
B CO–79609–A SAV 9 MAR 95
C C092339 JAK 23 FEB 98

Downloaded from Arrow.com.