Honeywell

Installation Instructions for the SURSENSE® Ultra Low Pressure Sensors

DCAL4 Series

ISSUE 2

PK 80161

⚠WARNING

PERSONAL INJURY

DO NOT USE these products as safety or emergency stop devices, or in any other application where failure of the product could result in personal injury.

Failure to comply with these instructions could result in death or serious injury.

GENERAL INFORMATION

The DCAL4 Series sensors provide a precision-calibrated, ratiometric 4 V output based on SURSENSE®, a proprietary technology. Each sensor features the precision calibration found in the DCX Series with the addition of fully integrated signal conditioning in an industry-standard package. Intended to operate from a fixed 5.0 Vdc supply, the DCAL4 gage pressure sensors provide a 0.25 V to 4.25 V output while the differential versions provide a ± 2.0 V output centered on a 2.25 V zero pressure offset. These highly stable sensors are ideally suited for microprocessor or microcontroller based systems.

Product is patented by US patent 6023978.

SOLDERING/ASSEMBLY

Limit soldering to 315 °C [600 °F] maximum, with duration of five seconds maximum. Leads must be adequately supported during any forming/shearing operation to ensure that the leads are not stressed inside the plastic case.

EQUIVALENT CIRCUIT

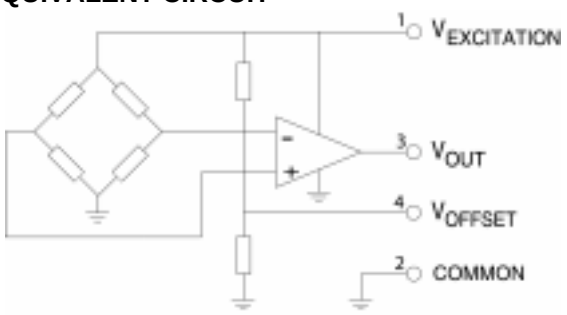

ELECTRICAL SPECIFICATIONS @ 25 °C, 5 Vdc (unless otherwise noted)

Pressure Range	0 in H_2O [0 mBar] to 1 in H_2O [2,5 mBar]
	0 in H_2O [0 mBar] to 5 in H_2O [12,50 mBar]
	0 in H_2O [0 mBar] to 10 in H_2O [25,0 mBar]
	0 in H_2O [0 mBar] to 20 in H_2O [50,0 mBar]
	0 in H_2O [0 mBar] to 30 in H_2O [75,0 mBar]
Offset Gage	0.25 ±0.1 Vdc
Offset Differential	2.25 ±0.1 Vdc
Span – Gage (P2>P1)	4.0 ±0.1 Vdc
Span – Differential	
(P2>P1)	+2.0 ±0.1 Vdc
(P1>P2)	-2.0 ±0.1 Vdc
Supply Voltage	3 Vdc min., 16 Vdc max.

ENVIRONMENTAL SPECIFICATIONS

Operating Temperature	-25 °C to 85 °C [-13 °F to 185 °F]
Storage Temperature	-40 °C to 125 °C [-40 °F to 257 °F]
Hysteresis and Linearity	0.05% Span, Typ.
Media Compatibility	**P1 Port (Dry Gases Only):** Media must be compatible with epoxy-based adhesive. **P2 Port:** Media must be compatible with nylon housing, epoxy adhesive and silicon.

PIN DESIGNATIONS

1 = V Excitation
2 = Common
3 = V Output
4 = V Offset

© Honeywell 2003, All Rights Reserved

Downloaded from Arrow.com.

MOUNTING DIMENSIONS (for reference only) mm/in

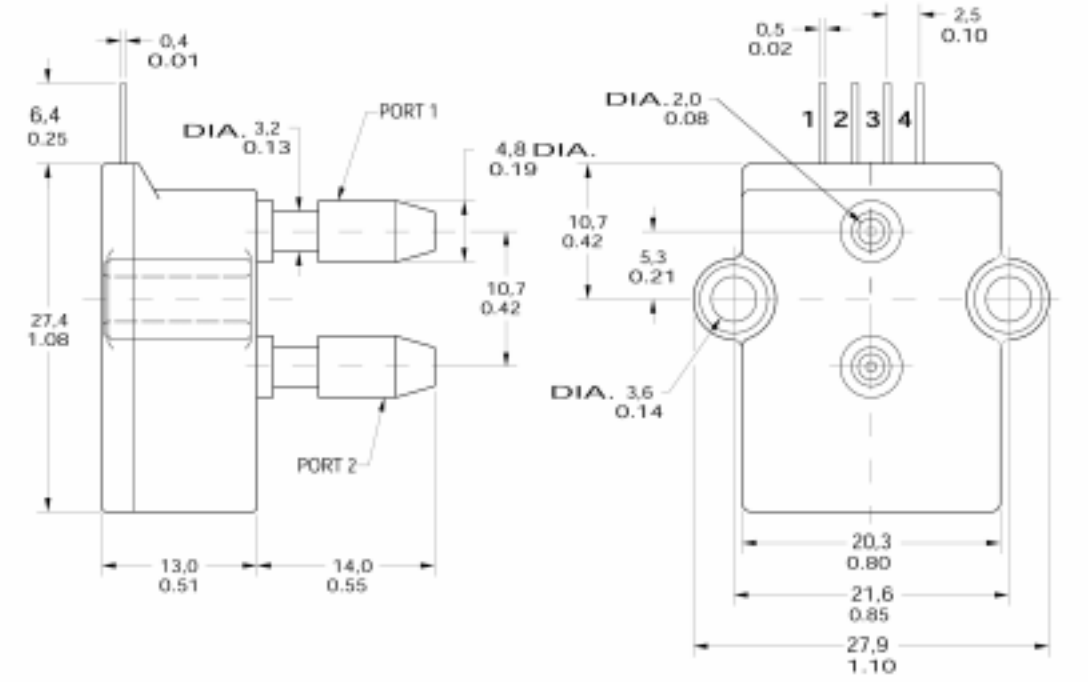

WARRANTY/REMEDY

Honeywell warrants goods of its manufacture as being free of defective materials and faulty workmanship. Contact your local sales office for warranty information. If warranted goods are returned to Honeywell during the period of coverage, Honeywell will repair or replace without charge those items it finds defective. The foregoing is Buyer's sole remedy and is **in lieu of all other warranties, expressed or implied, including those of merchantability and fitness for a particular purpose.**

Specifications may change without notice. The information we supply is believed to be accurate and reliable as of this printing. However, we assume no responsibility for its use.

While we provide application assistance personally, through our literature and the Honeywell web site, it is up to the customer to determine the suitability of the product in the application.

For application assistance, current specifications, or name of the nearest Authorized Distributor, contact a nearby sales office. Or call:

1-800-537-6945 USA
1-800-737-3360 Canada
1-815-235-6847 International

FAX

1-815-235-6545 USA

INTERNET

www.honeywell.com/sensing
info.sc@honeywell.com

Honeywell

Sensing and Control
Honeywell
11 West Spring Street
Freeport, Illinois 61032
P80161-2-EN IL50 GLO 303 Printed in USA

www.honeywell.com/sensing

Downloaded from Arrow.com.