Overview

KEMET's CAN series are AC rated ceramic capacitors designed for 250 VAC applications where higher CV values are required but not available in safety certified MLCCs. These capacitors are qualified for continuous use under AC line conditions of 250 VAC 50/60 Hz. Available in a variety of case sizes and industry leading CV values (capacitance/voltage), these devices exhibit low leakage current and low ESR at high frequencies.

For added reliability, KEMET's flexible termination technology is an available option that provides superior flex performance over standard termination systems. This series is available in X7R and C0G dielectrics. X7R exhibits a predictable change in capacitance with respect to time and voltage, and boasts a minimal change in capacitance with reference to ambient temperature. C0G exhibits no change in capacitance with respect to time and voltage and boasts a negligible change in capacitance with reference to ambient temperature. CAN series is specifically designed and tested for 50/60 Hz line frequencies and other non-safety critical applications.

Benefits

- Continuous AC voltage rating 250 VAC, 50/60 Hz
- Offers more than 50x capacitance versus Safety Rated MLCCs
- Base metal electrode (BME) dielectric system
- −55°C to +125°C operating temperature range
- Low ESR and ESL
- Lead (Pb)-free, RoHS, and REACH Compliant
- Temperature stable dielectric
- Non-polar device, minimizing installation concerns
- 100% pure matte tin-plated termination finish allowing for excellent solderability

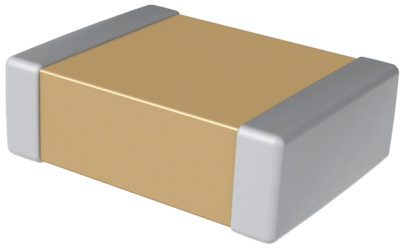

Applications

- AC-DC converters
- AC filtering
- Power factor correction
- Power supply

Downloaded from Arrow.com.

Ordering Information

CAN	08	C	103	K	A	R	A	C	TU
Series	Case Size (L"x W")	Specification/ Series	Capacitance Code (pF)	Capacitance Tolerance	Rated Voltage (V)	Dielectric	Subclass Designation	Termination Finish	Packaging (Suffix/C-Spec)
CAN = Ceramic AC Rated MLCCs	06 = 0603 08 = 0805 12 = 1206 13 = 1210 17 = 1808 18 = 1812 19 = 1825 21 = 2220 22 = 2225	C = Standard X = Flex	Two single digits and number of zeros.	F = ±1% G = ±2% J = ±5% K = ±10% M = ±20%	A = 250 VAC 50/60 Hz	R = X7R G = C0G	A = N/A	C = 100% matte Sn	See "Packaging C-Spec Ordering Options Table"

See Table 1 for available capacitance and voltage ratings.

Packaging C-Spec Ordering Options Table

Packaging Type	Packaging/Grade Ordering Code (C-Spec)
Bulk Bag[1]	Not Required (Blank)
7" Reel/Unmarked[2]	TU
13" Reel/Unmarked	7411 (EIA 0603 case size) 7210 (EIA 0805 and larger case sizes)
7" Reel/Marked[2]	TM
13" Reel/Marked	7215

[1] Default packaging is "Bulk Bag." An ordering code C-Spec is not required for "Bulk Bag" packaging.
[2] The terms "Marked" and "Unmarked" pertain to laser marking option of capacitors. All packaging options labeled as "Unmarked" will contain capacitors that have not been laser marked.

Downloaded from Arrow.com.

Typical Performance

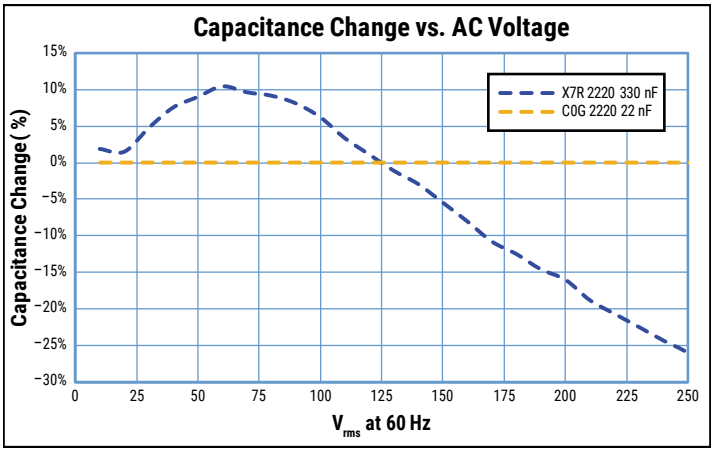

Electrical Parameters/Performance Characteristics

Item	Dielectric	Parameters/Characteristics
Operating temperature range	X7R	−55°C to +125°C
	C0G	−55°C to +125°C
Capacitance change with reference to +25°C and 0 VDC applied (TCC)	X7R	±15%
	C0G	±30 ppm/°C
[1] Aging rate (maximum % capacitance loss/decade hour)	X7R	3.0%
	C0G	0%
[2] Dielectric withstanding voltage (DWV) 5 ±1 seconds and charge/discharge not exceeding 50 mA	X7R	945 VDC
	C0G	819 VDC
[3] Dissipation factor (DF) maximum limit at 25°C	X7R	2.5%
	C0G	0.1%
[4] Insulation resistance (IR) minimum limit at 25°C 500 VDC applied for 120 ±5 seconds	X7R	100 MΩ-µF or 10 GΩ
	C0G	1,000 MΩ-µF or 100 GΩ

[1] Regarding Aging Rate: Capacitance measurements (including tolerance) are indexed to a referee time of 1,000 hours.
[2] DWV is the voltage a capacitor can withstand (survive) for a short period of time. It exceeds the nominal and continuous working voltage of the capacitor.
[3] Capacitance and dissipation factor (DF) measured under the following conditions:
C0G:
1 MHz ±100 kHz and 1.0 ±0.2 Vrms if capacitance ≤ 1,000 pF.
1 kHz ±50 Hz and 1.0 ±0.2 Vrms if capacitance > 1,000 pF.

X7R:
1 kHz ±50 Hz and 1.0 ±0.2 Vrms

Note: When measuring capacitance it is important to ensure the set voltage level is held constant. The HP4284 and Agilent E4980 have a feature known as Automatic Level Control (ALC). The ALC feature should be switched to "ON".

Downloaded from Arrow.com.

Dimensions – Millimeters (Inches)

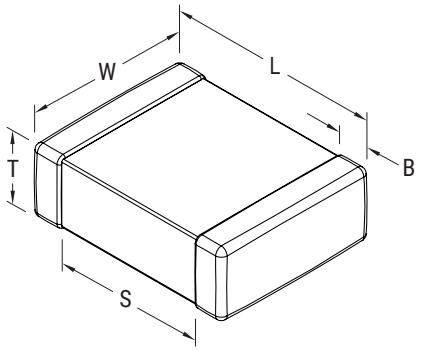

Standard Termination

Case Size	EIA Size Code	Metric Size Code	L Length	W Width	T Thickness	B Bandwidth	S Separation Minimum	Mounting Technique
06	0603	1608	1.60 (0.063) ±0.15 (0.006)	0.80 (0.032) ±0.15 (0.006)	See Table 2 for Thickness	0.35 (0.014) ±0.15 (0.006)	0.50 (0.020)	Solder Wave or Solder Reflow
08	0805	2012	2.00 (0.079) ±0.20 (0.008)	1.25 (0.049) ±0.20 (0.008)		0.50 (0.02) ±0.25 (0.010)	0.70 (0.028)	
12	1206	3216	3.20 (0.126) ±0.20 (0.008)	1.60 (0.063) ±0.20 (0.008)			1.50 (0.060)	
13	1210	3225	3.20 (0.126) ±0.20 (0.008)	2.50 (0.098) ±0.20 (0.008)			1.50 (0.060)	Solder Reflow Only
17	1808	4520	4.70 (0.185) ±0.50 (0.020)	2.00 (0.079) ±0.20 (0.008)		0.60 (0.024) ±0.35 (0.014)	2.90 (0.114)	
18	1812	4532	4.50 (0.177) ±0.30 (0.012)	3.20 (0.126) ±0.30 (0.012)			2.30 (0.091)	
19	1825	4564	4.50 (0.177) ±0.30 (0.012)	6.40 (0.252) ±0.40 (0.016)			2.30 (0.091)	
21	2220	5650	5.70 (0.224) ±0.40 (0.016)	5.00 (0.197) ±0.40 (0.016)			3.50 (0.138)	
22	2225	5664	5.60 (0.220) ±0.40 (0.016)	6.40 (0.252) ±0.40 (0.016)			3.20 (0.126)	

Flexible Termination

Case Size	EIA Size Code	Metric Size Code	L Length	W Width	T Thickness	B Bandwidth	S Separation Minimum	Mounting Technique
06	0603	1608	1.60 (0.063) ±0.15 (0.006)	0.80 (0.032) ±0.15 (0.006)	See Table 2 for Thickness	0.35 (0.014) ±0.15 (0.006)	0.40 (0.016)	Solder Wave or Solder Reflow
08	0805	2012	2.00 (0.079) ±0.30 (0.012)	1.25 (0.049) ±0.30 (0.012)		0.50 (0.02) ±0.25 (0.010)	0.60 (0.024)	
12	1206	3216	3.30 (0.130) ±0.40 (0.016)	1.60 (0.063) ±0.35 (0.013)		0.60 (0.024) ±0.25 (0.010)	1.50 (0.060)	
13	1210	3225	3.30 (0.130) ±0.40 (0.016)	2.60 (0.102) ±0.30 (0.012)			1.50 (0.060)	Solder Reflow Only
17	1808	4520	4.70 (0.185) ±0.50 (0.020)	2.00 (0.079) ±0.20 (0.008)		0.70 (0.028) ±0.35 (0.014)	2.90 (0.114)	
18	1812	4532	4.50 (0.178) ±0.40 (0.016)	3.20 (0.126) ±0.30 (0.012)			2.30 (0.091)	
19	1825	4564	4.60 (0.181) ±0.40 (0.016)	6.40 (0.252) ±0.40 (0.016)			2.30 (0.091)	
21	2220	5650	5.90 (0.232) ±0.75 (0.030)	5.00 (0.197) ±0.40 (0.016)			3.50 (0.138)	
22	2225	5664	5.90 (0.232) ±0.75 (0.030)	6.40 (0.252) ±0.40 (0.016)			3.20 (0.126)	

Downloaded from Arrow.com.

Table 1A – X7R Dielectric Capacitance Range/Selection Waterfall Standard and Flexible Terminations

Cap	Cap Code	Case Size/Series					CAN06 0603	CAN08 0805	CAN12 1206	CAN13 1210	CAN17 1808	CAN18 1812	CAN19 1825	CAN21 2220	CAN22 2225
		Voltage Code					A								
		Rated Voltage (VAC)					250								
		Capacitance Tolerance					See Table 2 for chip thickness dimensions.								
1,000 pF	102	F	G	J	K	M	CG								
1,200 pF	122	F	G	J	K	M	CG								
1,500 pF	152	F	G	J	K	M	CG								
2,200 pF	222	F	G	J	K	M		DG							
2,700 pF	272	F	G	J	K	M		DG							
3,300 pF	332	F	G	J	K	M		DG							
3,900 pF	392	F	G	J	K	M		DG							
4,700 pF	472	F	G	J	K	M		DG							
5,600 pF	562	F	G	J	K	M		DG							
6,800 pF	682	F	G	J	K	M		DG							
8,200 pF	822	F	G	J	K	M		DG							
10,000 pF	103	F	G	J	K	M		DG							
12,000 pF	123	F	G	J	K	M		DG	EJ						
15,000 pF	153	F	G	J	K	M			EJ						
18,000 pF	183	F	G	J	K	M			EJ		LE				
22,000 pF	223	F	G	J	K	M			EJ	FZ	LE				
27,000 pF	273	F	G	J	K	M			EJ	FZ	LA	GB			
33,000 pF	333	F	G	J	K	M			EJ	FZ	LA	GB			
39,000 pF	393	F	G	J	K	M				FZ	LA	GB			
47,000 pF	473	F	G	J	K	M				FU	LB	GC			
56,000 pF	563	F	G	J	K	M				FU	LB	GE			
62,000 pF	623	F	G	J	K	M				FK	LC	GE			
68,000 pF	683	F	G	J	K	M				FK	LC	GE			
82,000 pF	823	F	G	J	K	M				FK	LC	GE			
0.10 µF	104	F	G	J	K	M				FS	LC	GH			
0.12 µF	124	F	G	J	K	M						GK	HE		
0.15 µF	154	F	G	J	K	M						GN	HE	JE	
0.18 µF	184	F	G	J	K	M							HG	JE	KE
0.22 µF	224	F	G	J	K	M							HJ	JK	KF
0.27 µF	274	F	G	J	K	M							HJ	JL	KH
0.33 µF	334	F	G	J	K	M								JN	KH
Cap	Cap Code	Rated Voltage (VAC)					250								
		Voltage Code					A								
		Case Size/Series					CAN06 0603	CAN08 0805	CAN12 1206	CAN13 1210	CAN17 1808	CAN18 1812	CAN19 1825	CAN21 2220	CAN22 2225

Downloaded from Arrow.com.

Table 1B – C0G Dielectric Capacitance Range/Selection Waterfall Standard Termination

Cap	Cap Code	Case Size/Series					CAN06 0603	CAN08 0805	CAN12 1206	CAN13 1210	CAN17 1808	CAN18 1812	CAN19 1825	CAN21 2220	CAN22 2225
		Voltage Code					A								
		Rated Voltage (VAC)					250								
		Capacitance Tolerance					See Table 2 for chip thickness dimensions.								
100 pF	101	F	G	J	K	M	CG								
110 pF	111	F	G	J	K	M	CG								
120 pF	121	F	G	J	K	M	CG								
130 pF	131	F	G	J	K	M	CG								
150 pF	151	F	G	J	K	M	CG								
160 pF	161	F	G	J	K	M	CG								
180 pF	181	F	G	J	K	M	CG								
200 pF	201	F	G	J	K	M	CG								
220 pF	221	F	G	J	K	M	CG								
240 pF	241	F	G	J	K	M	CG								
270 pF	271	F	G	J	K	M	CG								
300 pF	301	F	G	J	K	M	CG								
330 pF	331	F	G	J	K	M	CG								
360 pF	361	F	G	J	K	M	CG								
390 pF	391	F	G	J	K	M	CG								
430 pF	431	F	G	J	K	M	CG								
470 pF	471	F	G	J	K	M	CG								
510 pF	511	F	G	J	K	M	CG								
560 pF	561	F	G	J	K	M	CG								
620 pF	621	F	G	J	K	M	CG								
680 pF	681	F	G	J	K	M	CG								
1,000 pF	102	F	G	J	K	M		DN	EF	FM	LB	GB	HE	JK	KE
1,100 pF	112	F	G	J	K	M		DN	EG	FK	LC	GB	HE	JK	KE
1,200 pF	122	F	G	J	K	M		DN	EG	FK	LC	GB	HE	JK	KE
1,300 pF	132	F	G	J	K	M		DN	EG	FS	LC	GB	HE	JK	KE
1,500 pF	152	F	G	J	K	M		DP	EG	FS	LC	GB	HE	JK	KE
1,600 pF	162	F	G	J	K	M		DP	EG	FS	LC	GD	HG	JK	KE
1,800 pF	182	F	G	J	K	M		DG	EG	FS	LC	GD	HG	JK	KE
2,000 pF	202	F	G	J	K	M		DG	EB	FL	LA	GH	HG	JK	KE
2,200 pF	222	F	G	J	K	M		DG	EB	FL	LA	GH	HG	JK	KE
Cap	Cap Code	Rated Voltage (VAC)					250								
		Voltage Code					A								
		Case Size/Series					CAN06 0603	CAN08 0805	CAN12 1206	CAN13 1210	CAN17 1808	CAN18 1812	CAN19 1825	CAN21 2220	CAN22 2225

[1] *Not available in Flex termination.*

[2] *Different thickness codes between standard and flex termination options. Example: HE/HJ - Standard Termination = HE, Flexible Termination = HJ*

Downloaded from Arrow.com.

Table 1B – C0G Dielectric Capacitance Range/Selection Waterfall Standard Termination cont.

Cap	Cap Code	Case Size/Series					CAN06 0603	CAN08 0805	CAN12 1206	CAN13 1210	CAN17 1808	CAN18 1812	CAN19 1825	CAN21 2220	CAN22 2225
		Voltage Code					A								
		Rated Voltage (VAC)					250								
		Capacitance Tolerance					See Table 2 for chip thickness dimensions.								
2,400 pF	242	F	G	J	K	M		DG	EB	FL	LA	GH	HG	JK	KE
2,700 pF	272	F	G	J	K	M		DG	EB	FL	LA	GH	HG	JK	KE
3,000 pF	302	F	G	J	K	M			EB	FL	LA	GH	HG	JK	KE
3,300 pF	332	F	G	J	K	M			EB	FM	LA	GH	HG	JK	KE
3,600 pF	362	F	G	J	K	M			EC	FM	LB	GH	HG	JK	KF
3,900 pF	392	F	G	J	K	M			EC	FY	LB	GH	HG	JK	KF
4,300 pF	432	F	G	J	K	M			ED	FY	LC	GH	HG	JK	KF
4,700 pF	472	F	G	J	K	M			ED	FY	LC	GH	HG	JK	KF
5,100 pF	512	F	G	J	K	M			EE	FS	LB	GK	HE	JK	KF
5,600 pF	562	F	G	J	K	M			EF	FS	LC	GK	HE	JK	KF
6,200 pF	622	F	G	J	K	M			EF	FE	LC	GK	HE	JE	KF
6,800 pF	682	F	G	J	K	M			EG	FE	LC	GM	HE	JE	KF
7,500 pF	752	F	G	J	K	M			EG	FF	LA	GM	HE	JE	KE
8,200 pF	822	F	G	J	K	M			EG	FF	LA	GO	HE	JE	KE
9,100 pF	912	F	G	J	K	M			EG	FF	LA	GO	HG	JE	KE
10,000 pF	103	F	G	J	K	M			EH	FG	LA	GO	HG	JE	KE
12,000 pF	123	F	G	J	K	M				FG	LA	GH	HG	JK	KE
15,000 pF	153	F	G	J	K	M				FM	LB	GH	HJ	JL	KF
18,000 pF	183	F	G	J	K	M				FM	LC	GH	HK	JL	KH
22,000 pF	223	F	G	J	K	M				FY		GH	HE	JN	KJ
27,000 pF	273	F	G	J	K	M				FS		GK	HE	JN	KJ
33,000 pF	333	F	G	J	K	M				FS		GM	HK	JN	KH
39,000 pF	393	F	G	J	K	M						GO	HE	JE	KJ
47,000 pF	473	F	G	J	K	M						GO	HE	JE	KE
56,000 pF	563	F	G	J	K	M							HG	JK	KE
68,000 pF	683	F	G	J	K	M							HJ	JL	KF
82,000 pF	823	F	G	J	K	M							HK	JL	KH
0.1 µF	104	F	G	J	K	M							HK	JN	KH
Cap	Cap Code	Rated Voltage (VAC)					250								
		Voltage Code					A								
		Case Size/Series					CAN06 0603	CAN08 0805	CAN12 1206	CAN13 1210	CAN17 1808	CAN18 1812	CAN19 1825	CAN21 2220	CAN22 2225

[1] *Not available in Flex termination.*

[2] *Different thickness codes between standard and flex termination options. Example: HE/HJ - Standard Termination = HE, Flexible Termination = HJ*

Downloaded from Arrow.com.

Table 1C – C0G Dielectric Capacitance Range/Selection Waterfall Flexible Termination

Cap	Cap Code	Case Size/Series					CAN06 0603	CAN08 0805	CAN12 1206	CAN13 1210	CAN17 1808	CAN18 1812	CAN19 1825	CAN21 2220	CAN22 2225
		Voltage Code					A								
		Rated Voltage (VAC)					250								
		Capacitance Tolerance					See Table 2 for chip thickness dimensions.								
100 pF	101	F	G	J	K	M	CG								
110 pF	111	F	G	J	K	M	CG								
120 pF	121	F	G	J	K	M	CG								
130 pF	131	F	G	J	K	M	CG								
150 pF	151	F	G	J	K	M	CG								
160 pF	161	F	G	J	K	M	CG								
180 pF	181	F	G	J	K	M	CG								
200 pF	201	F	G	J	K	M	CG								
220 pF	221	F	G	J	K	M	CG								
240 pF	241	F	G	J	K	M	CG								
270 pF	271	F	G	J	K	M	CG								
300 pF	301	F	G	J	K	M	CG								
330 pF	331	F	G	J	K	M	CG								
360 pF	361	F	G	J	K	M	CG								
390 pF	391	F	G	J	K	M	CG								
430 pF	431	F	G	J	K	M	CG								
470 pF	471	F	G	J	K	M	CG								
510 pF	511	F	G	J	K	M	CG								
560 pF	561	F	G	J	K	M	CG								
620 pF	621	F	G	J	K	M	CG								
680 pF	681	F	G	J	K	M	CG								
1,000 pF	102	F	G	J	K	M		DN	EF	FM	LB	GB		JK	KE
1,100 pF	112	F	G	J	K	M		DN	EG	FK	LC	GB		JK	KE
1,200 pF	122	F	G	J	K	M		DN	EG	FK	LC	GB	HJ	JK	KE
1,300 pF	132	F	G	J	K	M		DN	EG	FS	LC	GB	HE	JK	KE
1,500 pF	152	F	G	J	K	M		DP	EG	FS	LC	GB	HE	JK	KE
1,600 pF	162	F	G	J	K	M		DP	EG	FS	LC	GD	HG	JK	KE
1,800 pF	182	F	G	J	K	M		DG	EG	FS	LC	GD	HG	JK	KE
2,000 pF	202	F	G	J	K	M		DG	EB	FL	LA	GH	HE	JK	KE
2,200 pF	222	F	G	J	K	M		DG	EB	FL	LA	GH	HE	JK	KE
Cap	Cap Code	Rated Voltage (VAC)					250								
		Voltage Code					A								
		Case Size/Series					CAN06 0603	CAN08 0805	CAN12 1206	CAN13 1210	CAN17 1808	CAN18 1812	CAN19 1825	CAN21 2220	CAN22 2225

[1] *Not available in Flex termination.*

[2] *Different thickness codes between standard and flex termination options. Example: HE/HJ - Standard Termination = HE, Flexible Termination = HJ*

Downloaded from Arrow.com.

Table 1C – C0G Dielectric Capacitance Range/Selection Waterfall Flexible Termination cont.

Cap	Cap Code	Case Size/Series					CAN06 0603	CAN08 0805	CAN12 1206	CAN13 1210	CAN17 1808	CAN18 1812	CAN19 1825	CAN21 2220	CAN22 2225
		Voltage Code					A								
		Rated Voltage (VAC)					250								
		Capacitance Tolerance					See Table 2 for chip thickness dimensions.								
2,400 pF	242	F	G	J	K	M		DG	EB	FL	LA	GH	HE	JK	KE
2,700 pF	272	F	G	J	K	M		DG	EB	FL	LA	GH	HE	JK	KE
3,000 pF	302	F	G	J	K	M			EB	FL	LA	GH	HE	JK	KE
3,300 pF	332	F	G	J	K	M			EB	FM	LA	GH	HG	JK	KE
3,600 pF	362	F	G	J	K	M			EC	FM	LB	GH	HG	JK	KF
3,900 pF	392	F	G	J	K	M			EC	FY	LB	GH	HJ	JK	KF
4,300 pF	432	F	G	J	K	M			ED	FY	LC	GH	HJ	JK	KF
4,700 pF	472	F	G	J	K	M			ED	FY	LC	GH	HJ	JK	KF
5,100 pF	512	F	G	J	K	M			EE	FS	LB	GK	HE	JK	KF
5,600 pF	562	F	G	J	K	M			EF	FS	LC	GK	HE	JK	KF
6,200 pF	622	F	G	J	K	M			EF	FE	LC	GK	HE	JE	KF
6,800 pF	682	F	G	J	K	M			EG	FE	LC	GM	HE	JE	KF
7,500 pF	752	F	G	J	K	M			EG	FF	LA	GM	HE	JE	KE
8,200 pF	822	F	G	J	K	M			EG	FF	LA	GO	HE	JE	KE
9,100 pF	912	F	G	J	K	M			EG	FF	LA	GO	HG	JE	KE
10,000 pF	103	F	G	J	K	M			EH	FG	LA	GO	HG	JE	KE
12,000 pF	123	F	G	J	K	M				FG	LA	GH	HG	JK	KE
15,000 pF	153	F	G	J	K	M				FM	LB	GH	HJ	JL	KF
18,000 pF	183	F	G	J	K	M				FM	LC	GH	HK	JL	KH
22,000 pF	223	F	G	J	K	M				FY		GH	HE	JN	KJ
27,000 pF	273	F	G	J	K	M				FS		GK	HE	JN	KJ
33,000 pF	333	F	G	J	K	M				FS		GM	HK	JN	KH
39,000 pF	393	F	G	J	K	M						GO	HE	JE	KJ
47,000 pF	473	F	G	J	K	M						GO	HE	JE	KE
56,000 pF	563	F	G	J	K	M							HG	JK	KE
68,000 pF	683	F	G	J	K	M							HJ	JL	KF
82,000 pF	823	F	G	J	K	M							HK	JL	KH
0.1 µF	104	F	G	J	K	M							HK	JN	KH
Cap	Cap Code	Rated Voltage (VAC)					250								
		Voltage Code					A								
		Case Size/Series					CAN06 0603	CAN08 0805	CAN12 1206	CAN13 1210	CAN17 1808	CAN18 1812	CAN19 1825	CAN21 2220	CAN22 2225

[1] *Not available in Flex termination.*

[2] *Different thickness codes between standard and flex termination options. Example: HE/HJ - Standard Termination = HE, Flexible Termination = HJ*

Downloaded from Arrow.com.

Table 2A – Chip Thickness/Tape & Reel Packaging Quantities

Thickness Code	Case Size	Thickness ± Range (mm)	Paper Quantity		Plastic Quantity	
			7" Reel	13" Reel	7" Reel	13" Reel
CG	0603	0.80 ± 0.10*	4,000	15,000	0	0
DN	0805	0.78 ± 0.10*	4000	15000	0	0
DP	0805	0.90 ± 0.10*	4000	15000	0	0
DG	0805	1.25 ± 0.15	0	0	2,500	10,000
EB	1206	0.78 ± 0.10	0	0	4,000	10,000
EC	1206	0.90 ± 0.10	0	0	4,000	10,000
ED	1206	1.00 ± 0.10	0	0	2,500	10,000
EE	1206	1.10 ± 0.10	0	0	2,500	10,000
EF	1206	1.20 ± 0.15	0	0	2,500	10,000
EG	1206	1.60 ± 0.15	0	0	2,000	8,000
EH	1206	1.60 ± 0.20	0	0	2,000	8,000
EJ	1206	1.70 ±0.20	0	0	2,000	8,000
FE	1210	1.00 ± 0.10	0	0	2,500	10,000
FF	1210	1.10 ± 0.10	0	0	2,500	10,000
FG	1210	1.25 ± 0.15	0	0	2,500	10,000
FZ	1210	1.20 ± 0.20	0	0	2,500	10,000
FL	1210	1.40 ± 0.15	0	0	2,000	8,000
FU	1210	1.55 ± 0.20	0	0	2,000	8,000
FM	1210	1.70 ± 0.20	0	0	2,000	8,000
FY	1210	2.00 ± 0.20	0	0	2,000	8,000
FK	1210	2.10 ± 0.20	0	0	2,000	8,000
FS	1210	2.50 ± 0.30	0	0	1,000	4,000
LE	1808	1.00 ± 0.10	0	0	2,500	10,000
LA	1808	1.40 ± 0.15	0	0	1,000	4,000
LB	1808	1.60 ± 0.15	0	0	1,000	4,000
LC	1808	2.00 ± 0.15	0	0	1,000	4,000
GB	1812	1.00 ± 0.10	0	0	1,000	4,000
GC	1812	1.10 ± 0.10	0	0	1,000	4,000
GD	1812	1.25 ± 0.15	0	0	1,000	4,000
GE	1812	1.30 ± 0.10	0	0	1,000	4,000
GH	1812	1.40 ± 0.15	0	0	1,000	4,000
GK	1812	1.60 ± 0.20	0	0	1,000	4,000
GN	1812	1.70 ± 0.20	0	0	1,000	2,000
GM	1812	2.00 ± 0.20	0	0	500	2,000
GO	1812	2.50 ± 0.20	0	0	500	2,000
HE	1825	1.40 ± 0.15	0	0	1,000	4,000
HG	1825	1.60 ± 0.20	0	0	1,000	4,000
HJ	1825	2.00 ± 0.20	0	0	500	2,000
HK	1825	2.50 ± 0.20	0	0	500	2,000

Package quantity based on finished chip thickness specifications.

Downloaded from Arrow.com.

Table 2A – Chip Thickness/Tape & Reel Packaging Quantities cont.

Thickness Code	Case Size	Thickness ± Range (mm)	Paper Quantity		Plastic Quantity	
			7" Reel	13" Reel	7" Reel	13" Reel
JE	2220	1.40 ± 0.15	0	0	1,000	4,000
JK	2220	1.60 ± 0.20	0	0	1,000	4,000
JL	2220	2.00 ± 0.20	0	0	500	2,000
JN	2220	2.50 ± 0.20	0	0	500	2,000
KE	2225	1.40 ± 0.15	0	0	1,000	4,000
KF	2225	1.60 ± 0.20	0	0	1,000	4,000
KH	2225	2.00 ± 0.20	0	0	500	2,000
KJ	2225	2.50 ± 0.20	0	0	500	2,000

Package quantity based on finished chip thickness specifications.

Table 2B – Bulk Packaging Quantities

Packaging Type		Loose Packaging	
		Bulk Bag (default)	
Packaging C-Spec		N/A	
Case Size		Packaging Quantities (pieces/unit packaging)	
CAN	EIA (in)	Minimum	Maximum
06	0603	1	50,000
08	0805		
12	1206		
13	1210		
17	1808		20,000
18	1812		
19	1825		
21	2220		
22	2225		

For Industrial grade products ordered without a packaging, C-Spec will default to our standard "Bulk Bag" packaging.

Downloaded from Arrow.com.

Table 3 – Performance & Reliability: Test Methods & Conditions

<table>
<tr><th>Stress</th><th>Reference</th><th>Test or Inspection Method</th></tr>
<tr><td>Terminal Strength</td><td>AEC–Q200–006</td><td>Shear force per specific case size; Time: 60 ±1 second
<table>
<tr><th>Case Size</th><th>EIA Size Code</th><th>Force</th></tr>
<tr><td>06</td><td>0603</td><td>5 N</td></tr>
<tr><td>08</td><td>0805</td><td>10 N</td></tr>
<tr><td>12</td><td>1206</td><td>10 N</td></tr>
<tr><td>13</td><td>1210</td><td>10 N</td></tr>
<tr><td>≥ 17</td><td>≥ 1808</td><td>18 N</td></tr>
</table>
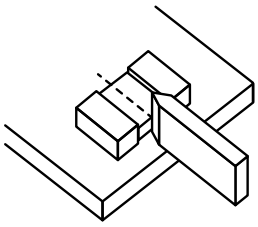 </td></tr>
<tr><td>Board Flex</td><td>AEC–Q200–005</td><td>Standard termination system - 2.0 mm (minimum)
Flexible termination system and C0G Dielectric - 3.0 mm (minimum)</td></tr>
<tr><td rowspan="4">Solderability</td><td rowspan="4">J–STD–002</td><td>Magnification 50 X. Conditions:</td></tr>
<tr><td>a) Method B, 4 hours at 155°C, dry heat at 235°C</td></tr>
<tr><td>b) Method B, category 3, at 215°C</td></tr>
<tr><td>c) Method D, category 3, at 260°C</td></tr>
<tr><td>Temperature Cycling</td><td>JESD22
Method JA-104</td><td>1,000 cycles (–55°C to +125°C). Measurement at 24 hours ±4 hours after test conclusion.</td></tr>
<tr><td rowspan="2">Biased Humidity</td><td rowspan="2">MIL–STD–202
Method 103</td><td>Load humidity: 1,000 hours 85°C/85% RH and 200 VDC maximum. Add 100 KΩ resistor.
Measurement at 24 hours ±4 hours after test conclusion.</td></tr>
<tr><td>Low volt humidity: 1,000 hours 85°C/85% RH and 1.5 V. Add 100 KΩ resistor.
Measurement at 24 hours ±4 hours after test conclusion.</td></tr>
<tr><td>Moisture Resistance</td><td>MIL–STD–202
Method 106</td><td>t = 24 hours/cycle. Steps 7a and 7b not required. Unpowered. Measurement at 24 hours ±4 hours after test conclusion.</td></tr>
<tr><td>AC Rated Life Test</td><td>KEMET Custom Test</td><td>1,000 hours at 125°C 250 V_{rms} 50/60 Hz
Measurement at 24 hours ±2 hours after test conclusion.</td></tr>
<tr><td>Storage Life</td><td>MIL–STD–202
Method 108</td><td>125°C, 0 VDC, for 1,000 hours</td></tr>
<tr><td>Vibration</td><td>MIL–STD–202
Method 204</td><td>5 G for 20 minutes, 12 cycles each of 3 orientations. Note: Use 8" x 5" PCB 0.031" thick
7 secure points on one long side and 2 secure points at corners of opposite sides. Parts mounted within 2" from any secure point. Test from 10 – 2,000 Hz</td></tr>
<tr><td>Mechanical Shock</td><td>MIL–STD–202
Method 213</td><td>Figure 1 of Method 213, Condition F</td></tr>
<tr><td>Resistance to Solvents</td><td>MIL–STD–202
Method 215</td><td>Add aqueous wash chemical, OKEM Clean or equivalent</td></tr>
</table>

Environmental Compliance

RoHS Lead-free REACH COMPLIANT

Lead (Pb)-free, RoHS, and REACH compliant without exemptions.

Downloaded from Arrow.com.

Table 4 – Land Pattern Design Recommendations per IPC–7351

Standard Termination

EIA Size Code	Metric Size Code	Density Level A: Maximum (Most) Land Protrusion (mm)					Density Level B: Median (Nominal) Land Protrusion (mm)					Density Level C: Minimum (Least) Land Protrusion (mm)				
		C	Y	X	V1	V2	C	Y	X	V1	V2	C	Y	X	V1	V2
0603	1608	0.90	1.15	1.10	4.00	2.10	0.80	0.95	1.00	3.10	1.50	0.60	0.75	0.90	2.40	1.20
0805	2012	1.00	1.35	1.55	4.40	2.60	0.90	1.15	1.45	3.50	2.00	0.75	0.95	1.35	2.80	1.70
1206	3216	1.60	1.35	1.90	5.60	2.90	1.50	1.15	1.80	4.70	2.30	1.40	0.95	1.70	4.00	2.00
1210	3225	1.60	1.35	2.80	5.65	3.80	1.50	1.15	2.70	4.70	3.20	1.40	0.95	2.60	4.00	2.90
1808	4520	2.30	1.75	2.30	7.40	3.30	2.20	1.55	2.20	6.50	2.70	2.10	1.35	2.10	5.80	2.40
1812	4532	2.15	1.60	3.60	6.90	4.60	2.05	1.40	3.50	6.00	4.00	1.95	1.20	3.40	5.30	3.70
1825	4564	2.15	1.60	6.90	6.90	7.90	2.05	1.40	6.80	6.00	7.30	1.95	1.20	6.70	5.30	7.00
2220	5650	2.75	1.70	5.50	8.20	6.50	2.65	1.50	5.40	7.30	5.90	2.55	1.30	5.30	6.60	5.60
2225	5664	2.70	1.70	6.90	8.10	7.90	2.60	1.50	6.80	7.20	7.30	2.50	1.30	6.70	6.50	7.00

Flexible Termination

EIA Size Code	Metric Size Code	Density Level A: Maximum (Most) Land Protrusion (mm)					Density Level B: Median (Nominal) Land Protrusion (mm)					Density Level C: Minimum (Least) Land Protrusion (mm)				
		C	Y	X	V1	V2	C	Y	X	V1	V2	C	Y	X	V1	V2
0603	1608	0.90	1.15	1.10	4.00	2.10	0.80	0.95	1.00	3.10	1.50	0.60	0.75	0.90	2.40	1.20
0805	2012	0.99	1.44	1.66	4.47	2.71	0.89	1.24	1.56	3.57	2.11	0.79	1.04	1.46	2.42	1.81
1206	3216	1.59	1.62	2.06	5.85	3.06	1.49	1.42	1.96	4.95	2.46	1.39	1.22	1.86	4.25	2.16
1210	3225	1.59	1.62	3.01	5.90	4.01	1.49	1.42	2.91	4.95	3.41	1.39	1.22	2.81	4.25	3.11
1808	4520	2.30	1.75	2.30	7.40	3.30	2.20	1.55	2.20	6.50	2.70	2.10	1.35	2.10	5.80	2.40
1812	4532	2.10	1.80	3.60	7.00	4.60	2.00	1.60	3.50	6.10	4.00	1.90	1.40	3.40	5.40	3.70
1825	4564	2.15	1.80	6.90	7.10	7.90	2.05	1.60	6.80	6.20	7.30	1.95	1.40	6.70	5.50	7.00
2220	5650	2.85	2.10	5.50	8.80	6.50	2.75	1.90	5.40	7.90	5.90	2.65	1.70	5.30	7.20	5.60
2225	5664	2.85	2.10	6.90	8.80	7.90	2.75	1.90	6.80	7.90	7.30	2.65	1.70	6.70	7.20	7.00

Density Level A: *For low-density product applications. Recommended for wave solder applications and provides a wider process window for reflow solder processes. KEMET only recommends wave soldering of EIA 0603, 0805, and 1206 case sizes.*
Density Level B: *For products with a moderate level of component density. Provides a robust solder attachment condition for reflow solder processes.*
Density Level C: *For high component density product applications. Before adapting the minimum land pattern variations, the user should perform qualification testing based on the conditions outlined in IPC Standard 7351 (IPC-7351).*

Image below based on Density Level B for an EIA 1210 case size.

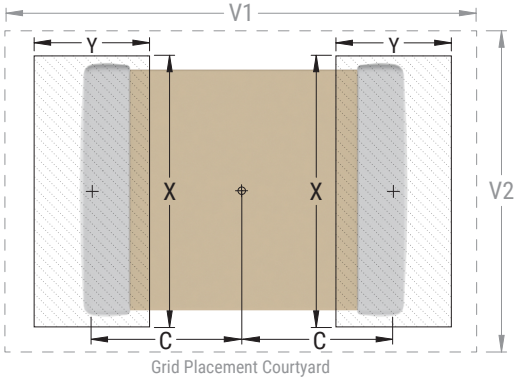

Downloaded from Arrow.com.

Soldering Process

Recommended Soldering Technique:

- Solder wave or solder reflow for EIA case sizes 0805 and 1206
- All other EIA case sizes are limited to solder reflow only

Recommended Reflow Soldering:

KEMET's family of surface mount multilayer ceramic capacitors (SMD MLCCs) are compatible with wave (single or dual), convection, IR, or vapor phase reflow techniques. Preheating these components is recommended to avoid extreme thermal stress. KEMET's recommended profile conditions for convection and IR reflow reflect the profile conditions of the IPC/J–STD–020 standard for moisture sensitivity testing. These devices can safely withstand a maximum of three reflow passes at these conditions.

Profile Feature	Termination Finish
	100% matte Sn
Preheat/Soak	
Temperature Minimum (T_{Smin})	150°C
Temperature Maximum (T_{Smax})	200°C
Time (t_S) from T_{Smin} to T_{Smax}	60 – 120 seconds
Ramp-Up Rate (T_L to T_P)	3°C/second maximum
Liquidous Temperature (T_L)	217°C
Time Above Liquidous (t_L)	60 – 150 seconds
Peak Temperature (T_P)	260°C
Time Within 5°C of Maximum Peak Temperature (t_P)	30 seconds maximum
Ramp-Down Rate (T_P to T_L)	6°C/second maximum
Time 25°C to Peak Temperature	8 minutes maximum

Note: All temperatures refer to the center of the package, measured on the capacitor body surface that is facing up during assembly reflow.

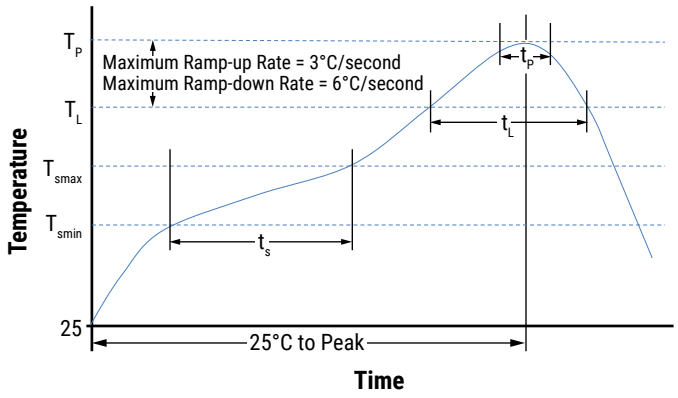

Storage & Handling

Ceramic chip capacitors should be stored in normal working environments. While the chips themselves are quite robust in other environments, solderability will be degraded by exposure to high temperatures, high humidity, corrosive atmospheres, and long term storage. Packaging materials will be degraded by high temperature – reels may soften or warp, and tape peel force may increase. KEMET recommends that maximum storage temperature not exceed 40°C and maximum storage humidity not exceed 70% relative humidity. Temperature fluctuations should be minimized to avoid condensation on the parts and atmospheres should be free of chlorine and sulfur bearing compounds. For optimized solderability, chip stock should be used promptly, preferably within 1.5 years upon receipt.

Downloaded from Arrow.com.

Construction

Standard Termination

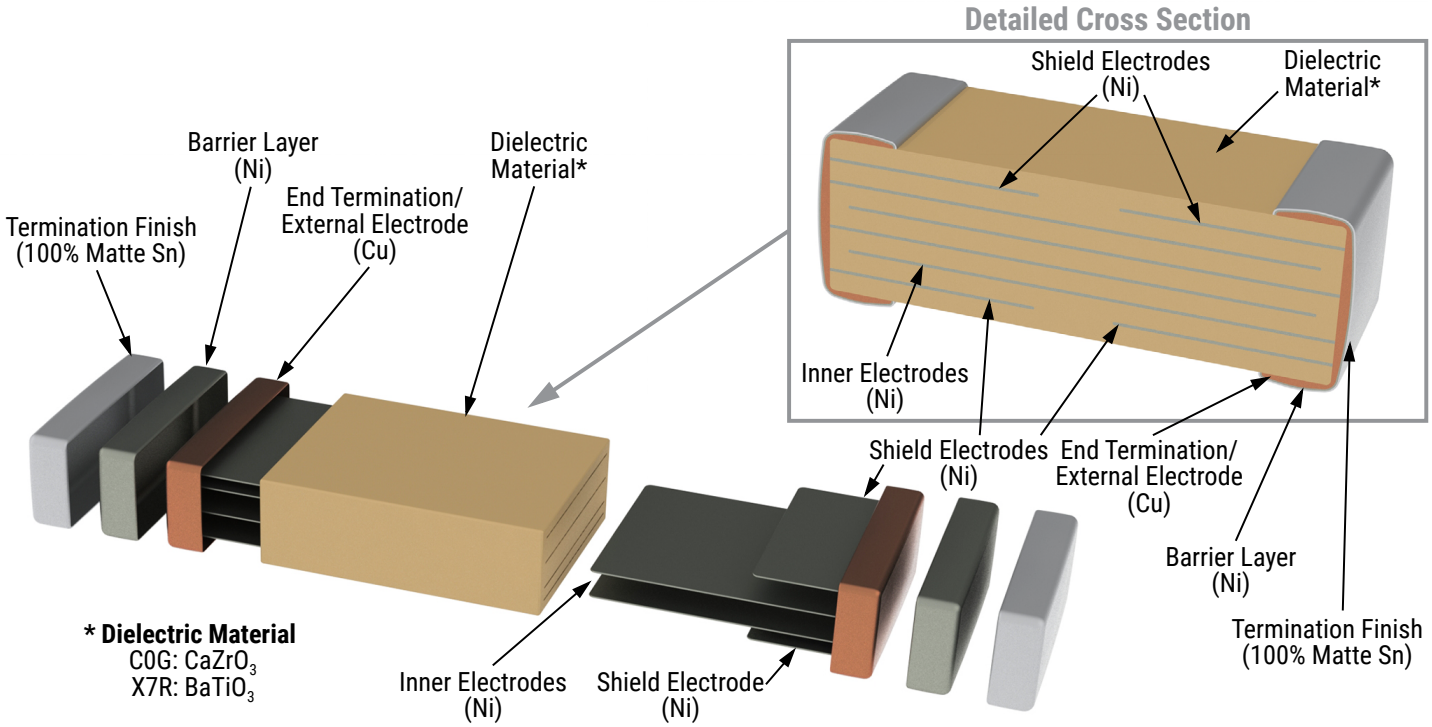

Flexible Termination

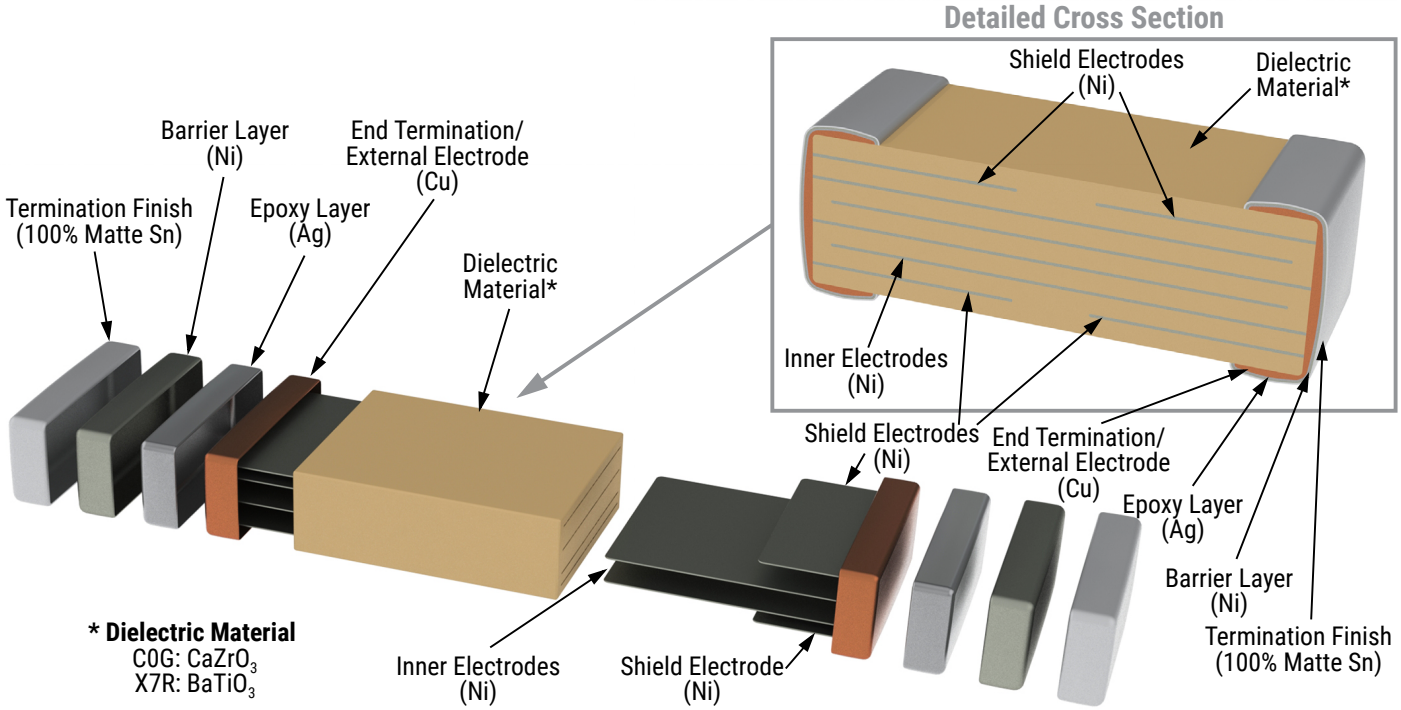

Downloaded from Arrow.com.

Capacitor Marking (Optional)

These surface mount multilayer ceramic capacitors are normally supplied unmarked. If required, they can be marked as an extra cost option. Marking is available on most KEMET devices, but must be requested using the correct ordering code identifier(s). If this option is requested, two sides of the ceramic body will be laser marked with a "K" to identify KEMET, followed by two characters (per EIA–198 - see table below) to identify the capacitance value. EIA 0603 case size devices are limited to the "K" character only.

Laser marking option is not available on:

- C0G, ultra stable X8R and Y5V dielectric devices.
- EIA 0402 case size devices.
- EIA 0603 case size devices with flexible termination option.
- KPS commercial and automotive grade stacked devices.
- X7R dielectric products in capacitance values outlined below.

EIA Case Size	Metric Size Code	Capacitance
0603	1608	≤ 170 pF
0805	2012	≤ 150 pF
1206	3216	≤ 910 pF
1210	3225	≤ 2,000 pF
1808	4520	≤ 3,900 pF
1812	4532	≤ 6,700 pF
1825	4564	≤ 0.018 µF
2220	5650	≤ 0.027 µF
2225	5664	≤ 0.033 µF

Marking appears in legible contrast. Illustrated below is an example of an MLCC with laser marking of "KA8", which designates a KEMET device with rated capacitance of 100 µF. Orientation of marking is vendor optional.

Downloaded from Arrow.com.

Capacitor Marking (Optional) cont.

Capacitance (pF) For Various Alpha/Numeral Identifiers										
Alpha Character	Numeral									
	9	0	1	2	3	4	5	6	7	8
	Capacitance (pF)									
A	0.10	1.0	10	100	1,000	10,000	100,000	1,000,000	10,000,000	100,000,000
B	0.11	1.1	11	110	1,100	11,000	110,000	1,100,000	11,000,000	110,000,000
C	0.12	1.2	12	120	1,200	12,000	120,000	1,200,000	12,000,000	120,000,000
D	0.13	1.3	13	130	1,300	13,000	130,000	1,300,000	13,000,000	130,000,000
E	0.15	1.5	15	150	1,500	15,000	150,000	1,500,000	15,000,000	150,000,000
F	0.16	1.6	16	160	1,600	16,000	160,000	1,600,000	16,000,000	160,000,000
G	0.18	1.8	18	180	1,800	18,000	180,000	1,800,000	18,000,000	180,000,000
H	0.20	2.0	20	200	2,000	20,000	200,000	2,000,000	20,000,000	200,000,000
J	0.22	2.2	22	220	2,200	22,000	220,000	2,200,000	22,000,000	220,000,000
K	0.24	2.4	24	240	2,400	24,000	240,000	2,400,000	24,000,000	240,000,000
L	0.27	2.7	27	270	2,700	27,000	270,000	2,700,000	27,000,000	270,000,000
M	0.30	3.0	30	300	3,000	30,000	300,000	3,000,000	30,000,000	300,000,000
N	0.33	3.3	33	330	3,300	33,000	330,000	3,300,000	33,000,000	330,000,000
P	0.36	3.6	36	360	3,600	36,000	360,000	3,600,000	36,000,000	360,000,000
Q	0.39	3.9	39	390	3,900	39,000	390,000	3,900,000	39,000,000	390,000,000
R	0.43	4.3	43	430	4,300	43,000	430,000	4,300,000	43,000,000	430,000,000
S	0.47	4.7	47	470	4,700	47,000	470,000	4,700,000	47,000,000	470,000,000
T	0.51	5.1	51	510	5,100	51,000	510,000	5,100,000	51,000,000	510,000,000
U	0.56	5.6	56	560	5,600	56,000	560,000	5,600,000	56,000,000	560,000,000
V	0.62	6.2	62	620	6,200	62,000	620,000	6,200,000	62,000,000	620,000,000
W	0.68	6.8	68	680	6,800	68,000	680,000	6,800,000	68,000,000	680,000,000
X	0.75	7.5	75	750	7,500	75,000	750,000	7,500,000	75,000,000	750,000,000
Y	0.82	8.2	82	820	8,200	82,000	820,000	8,200,000	82,000,000	820,000,000
Z	0.91	9.1	91	910	9,100	91,000	910,000	9,100,000	91,000,000	910,000,000
a	0.25	2.5	25	250	2,500	25,000	250,000	2,500,000	25,000,000	250,000,000
b	0.35	3.5	35	350	3,500	35,000	350,000	3,500,000	35,000,000	350,000,000
d	0.40	4.0	40	400	4,000	40,000	400,000	4,000,000	40,000,000	400,000,000
e	0.45	4.5	45	450	4,500	45,000	450,000	4,500,000	45,000,000	450,000,000
f	0.50	5.0	50	500	5,000	50,000	500,000	5,000,000	50,000,000	500,000,000
m	0.60	6.0	60	600	6,000	60,000	600,000	6,000,000	60,000,000	600,000,000
n	0.70	7.0	70	700	7,000	70,000	700,000	7,000,000	70,000,000	700,000,000
t	0.80	8.0	80	800	8,000	80,000	800,000	8,000,000	80,000,000	800,000,000
y	0.90	9.0	90	900	9,000	90,000	900,000	9,000,000	90,000,000	900,000,000

Downloaded from Arrow.com.

Tape & Reel Packaging Information

KEMET offers multilayer ceramic chip capacitors packaged in 8, 12 and 16 mm tape on 7" and 13" reels in accordance with EIA Standard 481. This packaging system is compatible with all tape-fed automatic pick and place systems. See Table 2 for details on reeling quantities for commercial chips.

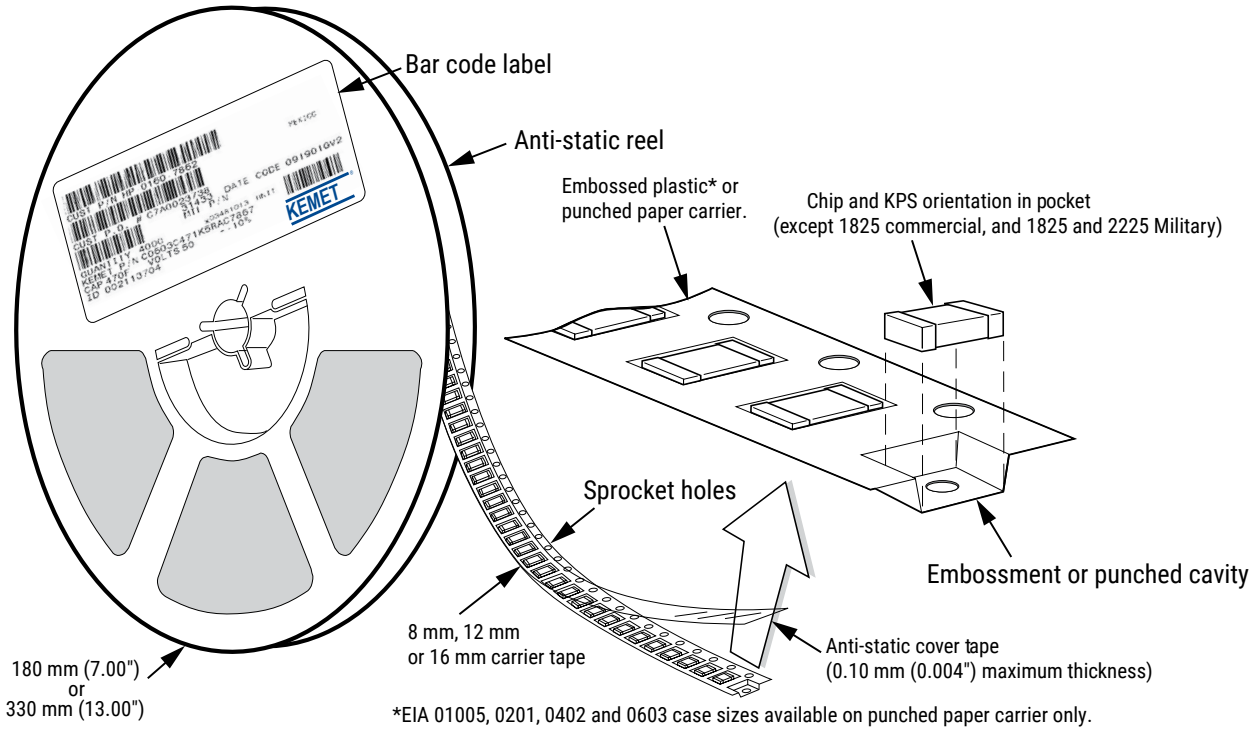

*EIA 01005, 0201, 0402 and 0603 case sizes available on punched paper carrier only.

Table 5 – Carrier Tape Configuration, Embossed Plastic & Punched Paper (mm)

EIA Case Size	Tape Size (W)*	Embossed Plastic		Punched Paper	
		7" Reel	13" Reel	7" Reel	13" Reel
		Pitch (P_1)*		Pitch (P_1)*	
0603	8	–	–	4	4
0805	8	4	4	4	4
1206 – 1210	8	4	4	4	4
1805 – 1808	12	4	4	–	–
≥ 1812	12	8	8	–	–

**Refer to Figures 1 and 2 for W and P_1 carrier tape reference locations.*
**Refer to Tables 7 and 8 for tolerance specifications.*

Downloaded from Arrow.com.

Figure 1 – Embossed (Plastic) Carrier Tape Dimensions

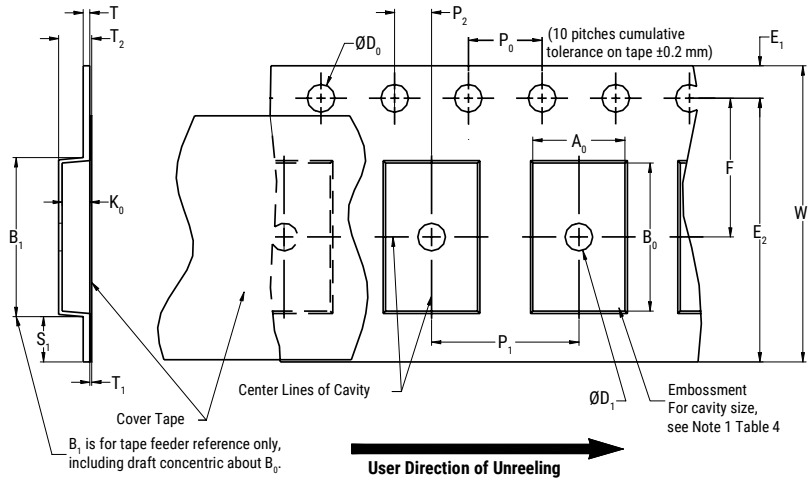

Table 6 – Embossed (Plastic) Carrier Tape Dimensions

Metric will govern

Constant Dimensions — Millimeters (Inches)									
Tape Size	D_0	D_1 Minimum Note 1	E_1	P_0	P_2	R Reference Note 2	S_1 Minimum Note 3	T Maximum	T_1 Maximum
8 mm	1.5 +0.10/−0.0 (0.059 +0.004/−0.0)	1.0 (0.039)	1.75 ±0.10 (0.069 ±0.004)	4.0 ±0.10 (0.157 ±0.004)	2.0 ±0.05 (0.079 ±0.002)	25.0 (0.984)	0.600 (0.024)	0.600 (0.024)	0.100 (0.004)
12 mm		1.5 (0.059)				30 (1.181)			
16 mm									
24 mm						30.0 (1.181)	5.0 (0.196)	0.250 (0.009)	0.350 (0.013)

Variable Dimensions — Millimeters (Inches)								
Tape Size	Pitch	B_1 Maximum Note 4	E_2 Minimum	F	P_1	T_2 Maximum	W Maximum	A_0,B_0 & K_0
8 mm	Single (4 mm)	4.35 (0.171)	6.25 (0.246)	3.5 ±0.05 (0.138 ±0.002)	4.0 ±0.10 (0.157 ±0.004)	2.5 (0.098)	8.3 (0.327)	Note 5
12 mm	Single (4 mm) and Double (8 mm)	8.2 (0.323)	10.25 (0.404)	5.5 ±0.05 (0.217 ±0.002)	8.0 ±0.10 (0.315 ±0.004)	4.6 (0.181)	12.3 (0.484)	
16 mm	Triple (12 mm)	12.1 (0.476)	14.25 (0.561)	7.5 ±0.05 (0.138 ±0.002)	12.0 ±0.10 (0.157 ±0.004)	4.6 (0.181)	16.3 (0.642)	
24 mm	16 mm	11.5 (0.452)	22.25 (0.875)	11.5 ±0.10 (0.452 ±0.003)	16.0 ±0.10 (0.629 ±0.004)	3 (0.118)	24.3 (0.956)	

1. The embossment hole location shall be measured from the sprocket hole controlling the location of the embossment. Dimensions of the embossment location and the hole location shall be applied independently of each other.
2. The tape with or without components shall pass around R without damage (see Figure 6).
3. If S_1 < 1.0 mm, there may not be enough area for a cover tape to be properly applied (see EIA Standard 481, paragraph 4.3, section b.)
4. B_1 dimension is a reference dimension for tape feeder clearance only.
5. The cavity defined by A_0, B_0 and K_0 shall surround the component with sufficient clearance that:
(a) the component does not protrude above the top surface of the carrier tape.
(b) the component can be removed from the cavity in a vertical direction without mechanical restriction, after the top cover tape has been removed.
(c) rotation of the component is limited to 20° maximum for 8 and 12 mm tapes and 10° maximum for 16 mm tapes (see Figure 3).
(d) lateral movement of the component is restricted to 0.5 mm maximum for 8 and 12 mm wide tape and to 1.0 mm maximum for 16 mm tape (see Figure 4).
(e) for KPS product, A_0 and B_0 are measured on a plane 0.3 mm above the bottom of the pocket.
(f) see addendum in EIA Standard 481 for standards relating to more precise taping requirements.

Downloaded from Arrow.com.

Packaging Information Performance Notes

1. Cover Tape Break Force: 1.0 kg minimum.
2. Cover Tape Peel Strength: The total peel strength of the cover tape from the carrier tape shall be:

Tape Width	Peel Strength
8 mm	0.1 to 1.0 newton (10 to 100 gf)
12 and 16 mm	0.1 to 1.3 newton (10 to 130 gf)

The direction of the pull shall be opposite the direction of the carrier tape travel. The pull angle of the carrier tape shall be 165° to 180° from the plane of the carrier tape. During peeling, the carrier and/or cover tape shall be pulled at a velocity of 300 ±10 mm/minute.
3. Labeling: Bar code labeling (standard or custom) shall be on the side of the reel opposite the sprocket holes. *Refer to EIA Standards 556 and 624*.

Figure 2 – Maximum Component Rotation

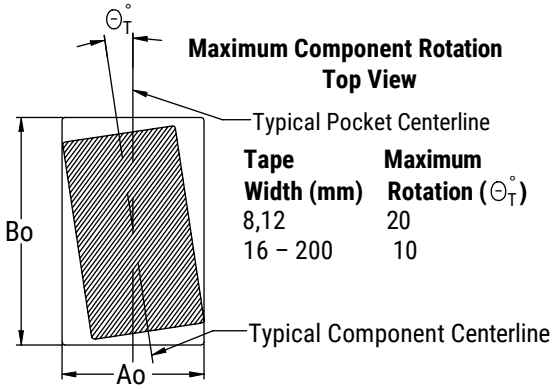

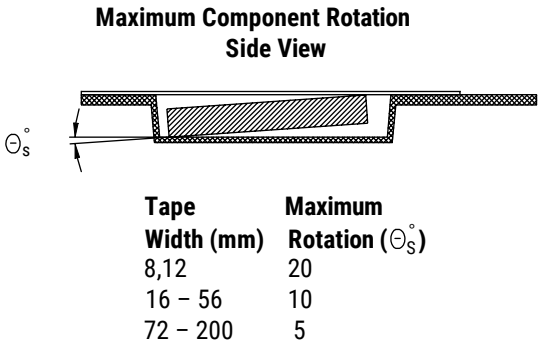

Figure 3 – Maximum Lateral Movement

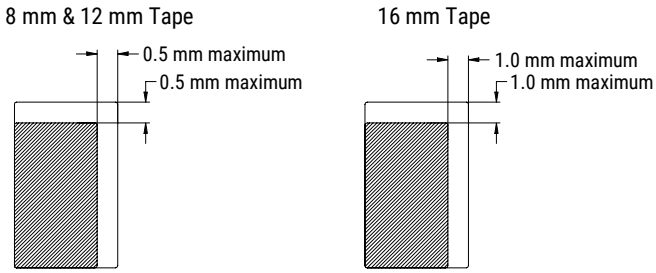

Figure 4 – Bending Radius

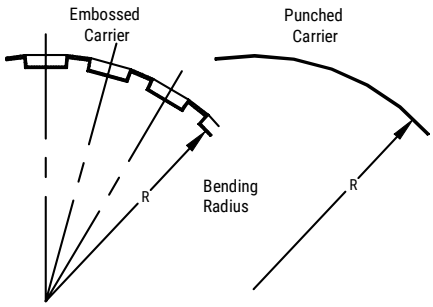

Downloaded from Arrow.com.

Figure 5 – Reel Dimensions

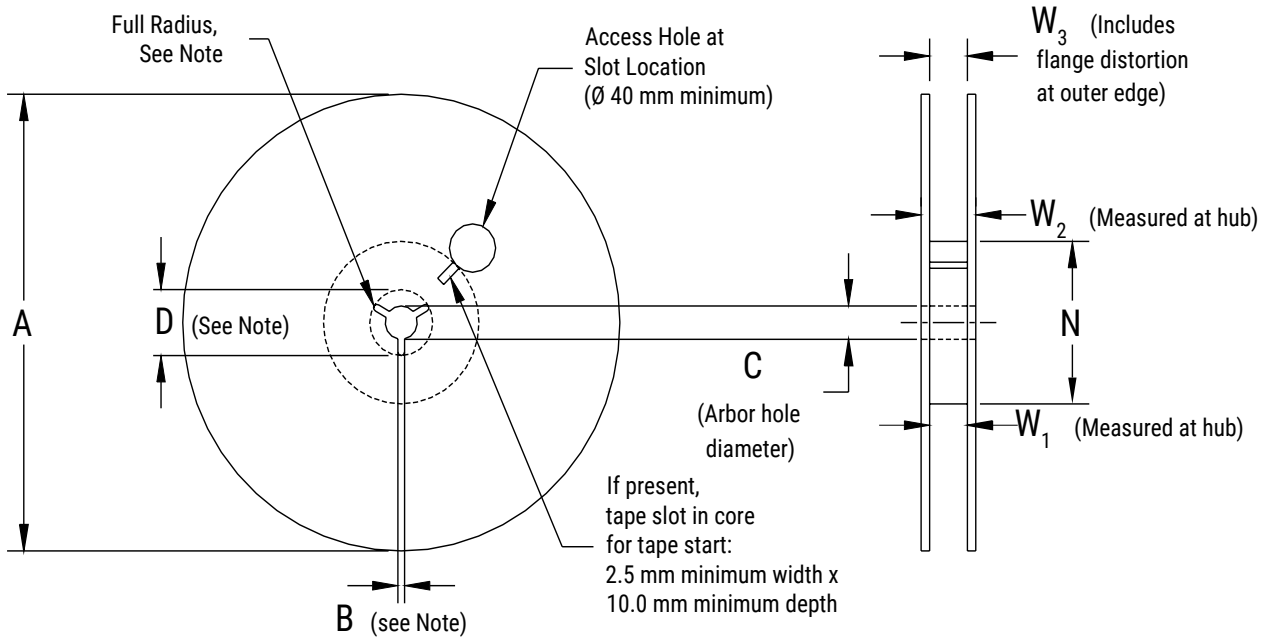

Note: Drive spokes optional; if used, dimensions B and D shall apply.

Table 7 – Reel Dimensions

Metric will govern

Constant Dimensions — Millimeters (Inches)				
Tape Size	A	B Minimum	C	D Minimum
8 mm	178 ±0.20 (7.008 ±0.008) or 330 ±0.20 (13.000 ±0.008)	1.5 (0.059)	13.0 +0.5/−0.2 (0.521 +0.02/−0.008)	20.2 (0.795)
12 mm				
16 mm				
24 mm		1.2 (0.047)	13.0 ±0.2 (0.521 ±0.008)	21 (0.826)

Variable Dimensions — Millimeters (Inches)				
Tape Size	N Minimum	W_1	W_2 Maximum	W_3
8 mm	50 (1.969)	8.4 +1.5/−0.0 (0.331 +0.059/−0.0)	14.4 (0.567)	Shall accommodate tape width without interference
12 mm		12.4 +2.0/−0.0 (0.488 +0.078/−0.0)	18.4 (0.724)	
16 mm		16.4 +2.0/−0.0 (0.646 +0.078/−0.0)	22.4 (0.882)	
24 mm		25 +1.0/−0.0 (0.984 +0.039/−0.0)	27.4 +1.0/−1.0 (1.078 +0.039/−0.039)	

Downloaded from Arrow.com.

Figure 6 – Tape Leader & Trailer Dimensions

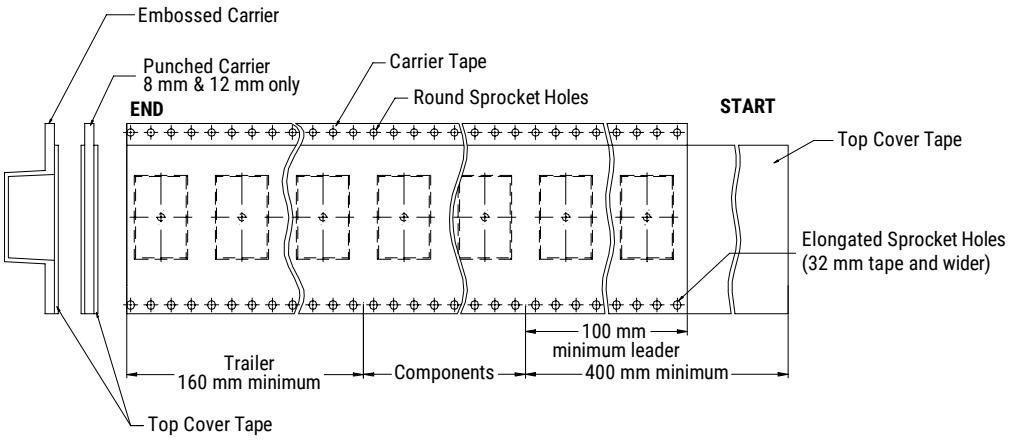

Figure 7 – Maximum Camber

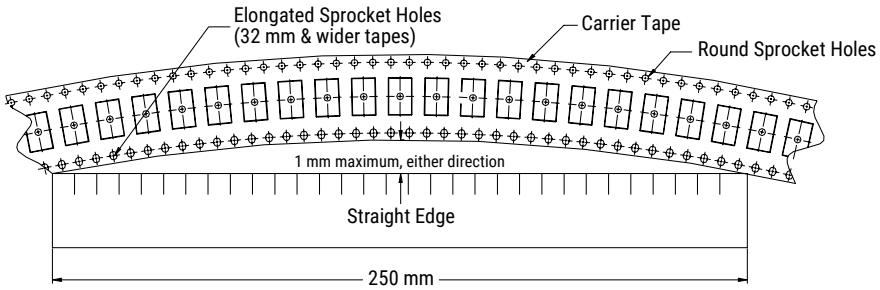

Downloaded from Arrow.com.

KEMET Electronics Corporation Sales Offices

For a complete list of our global sales offices, please visit https://www.yageogroup.com/SalesResources/SalesOffices

Disclaimer

YAGEO Corporation and its affiliates do not recommend the use of commercial or automotive grade products for high reliability applications or manned space flight.

All product specifications, statements, information and data (collectively, the "Information") in this datasheet are subject to change. The customer is responsible for checking and verifying the extent to which the Information contained in this publication is applicable to an order at the time the order is placed. All Information given herein is believed to be accurate and reliable, but it is presented without guarantee, warranty, or responsibility of any kind, expressed or implied.

Statements of suitability for certain applications are based on KEMET Electronics Corporation's ("KEMET") knowledge of typical operating conditions for such applications, but are not intended to constitute – and KEMET specifically disclaims – any warranty concerning suitability for a specific customer application or use. The Information is intended for use only by customers who have the requisite experience and capability to determine the correct products for their application. Any technical advice inferred from this Information or otherwise provided by KEMET with reference to the use of KEMET's products is given gratis, and KEMET assumes no obligation or liability for the advice given or results obtained.

Although KEMET designs and manufactures its products to the most stringent quality and safety standards, given the current state of the art, isolated component failures may still occur. Accordingly, customer applications which require a high degree of reliability or safety should employ suitable designs or other safeguards (such as installation of protective circuitry or redundancies) in order to ensure that the failure of an electrical component does not result in a risk of personal injury or property damage.

Although all product–related warnings, cautions and notes must be observed, the customer should not assume that all safety measures are indicated or that other measures may not be required.

KEMET is a registered trademark of KEMET Electronics Corporation.

Downloaded from Arrow.com.