Magnetics

Current Sense Surface Mount Transformers

Model HM33

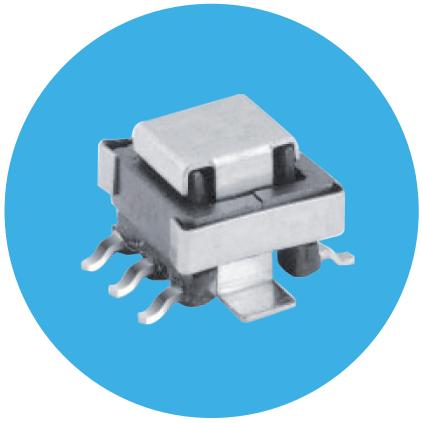

Features and Benefits

- Insulation Resistance, Minimum 10 MΩ
- Operating Temperature Range -40°C to + 130°C
- RoHS Compliant

Specification @ 25°C

Part Number	Turns N1:N2 @ 10 kHz	Secondary Inductance µH Min.	Primary DCR mΩ Max.	Secondary DCR Ω Max.	Primary Amps Max.	Pin 1 Marking Color Code	H10XXXLF ID Code
HM33-10125LF	1:125	3000	5.0	7.36	10	White	-
HM33-10100LF	1:100	2000	5.0	5.50	10	Black	-
HM33-10070LF	1:70	980	5.0	4.75	10	Yellow	-
HM33-10050LF	1:50	500	5.0	2.50	10	Green	-
HM33-10040LF	1:40	320	5.0	1.35	10	Blue	-
HM33-10030LF	1:30	180	5.0	1.00	10	Red	-
HM33-H10125LF	1:125	3000	0.75	7.36	20	White	A
HM33-H10100LF	1:100	2000	0.75	5.50	20	Black	B
HM33-H10070LF	1:70	980	0.75	4.75	20	Yellow	C
HM33-H10050LF	1:50	500	0.75	2.50	20	Green	D
HM33-H10040LF	1:40	320	0.75	1.35	20	Blue	E
HM33-H10030LF	1:30	180	0.75	1.00	20	Red	F

Outline Dimensions (mm)

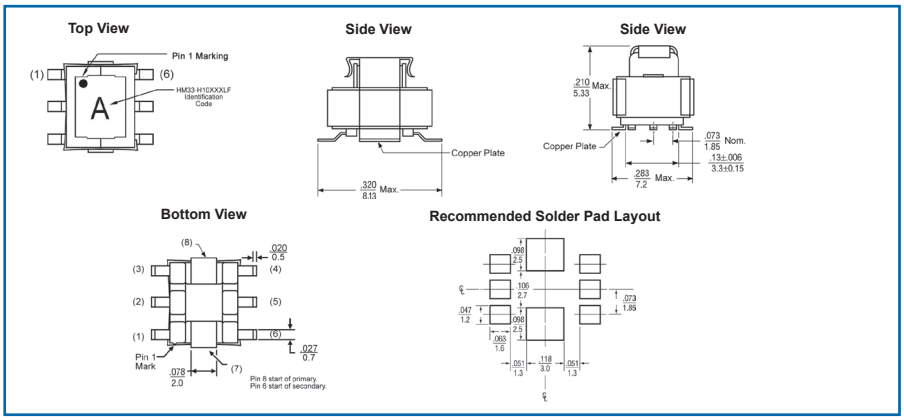

Schematic

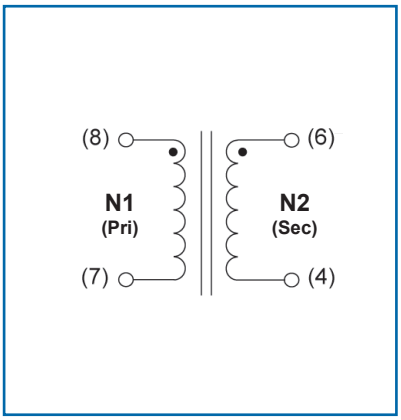

Ordering Information

HM33 - H10 125 LF TR

Model Series — HM33

Type
10 - Standard
H10 - High Current

Turns Ratio — 125

Lead-Free — LF

Tape & 13" Reel (750 Units/Reel) — TR

General Note

TT Electronics reserves the right to make changes in product specification without notice or liability.
All information is subject to TT Electronics' own data and is considered accurate at time of going to print.

© TT Electronics plc

BI Technologies
A-1445, Jalan Tanjung Api
25050 Kuantan
Pahang Darul Makmur
Malaysia
Ph: +60 9 565 8888 Fax: +60 9 514 3555
http://www.ttelectronics.com/magnetics/customer-service-enquiry

Downloaded from Arrow.com.