Copyright FCI.

FCIconnect.com

PRODUCT NUMBER	PITCH
VExx30x000J0G	3.81 mm

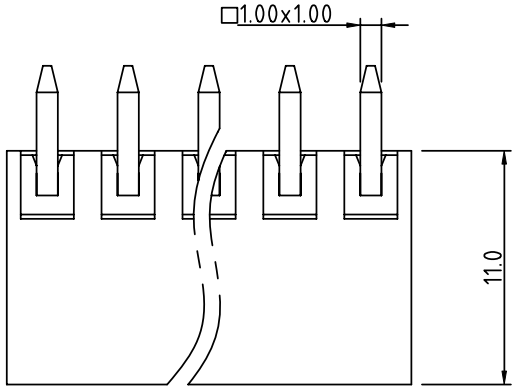

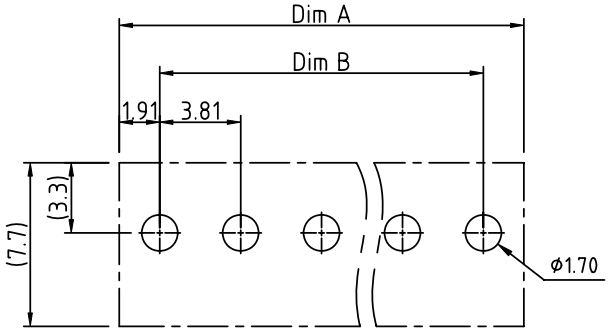

RECOMMENDED P.C.B LAYOUT
TOP VIEW

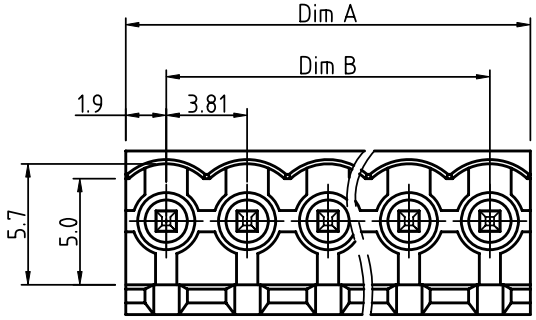

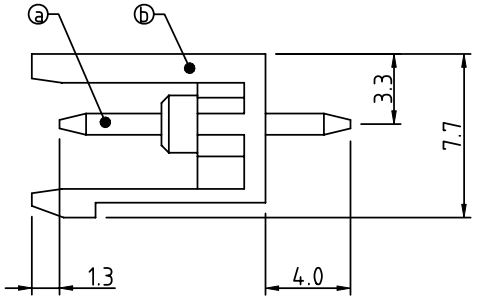

Material:
- Item ⓐ Contact pin:Copper, Tin plated
- Item ⓑ Terminal(housing): Thermoplastic (UL94V-0)

Electrical:	cULus
Voltage rating:	300V
Current rating:	8A
Withstanding Voltage:	1.6 KV
Operating temperature:	-40°C to +115°C
Soldering temperature:	260°C±5°C/5 Sec
Safety Approval:	c UL us

DIMENSION

Dim A	N×3.81
Dim B	(N-1)X3.81

N= NUMBER OF POLES

Poles	Tolerance
2P-5P	±0.15
6P-10P	±0.20
11P-15P	±0.25
16P-20P	±0.30
21P-24P	±0.35

PART NO.: VE xx 30 x 0 00J0 G

Solid block
No. of poles
02 2 poles
03 3 poles
... ...
24 24 poles

Color
0 Black (RAL9005)
2 Red (RAL3001/D)
3 Orange(RAL2011/P)
4 Yellow(RAL1018/A)
5 Green(RAL6018/T)
6 Blue (RAL5015/A)
8 Grey(RAL7035/D)
9 White(RAL1102)
C Green(RAL6018/U)

RoHS compliant
(lead<4%)
In copper Alloy

mat'l. code				surface ASME Y14.5	tolerance ASME Y14.5	projection	product family TERMINAL BLOCK
ltr	ecn no	dr	date	tolerances unless otherwise specified			title
				angles	linear X.±0.5 / X.X±0.3 / X.XX±0.1	MM	TERMINAL BLOCK
				X°±1°		scale	PLUGGABLE SOCKET,OPEN VERTICAL
				dr	EVIN ZHONG 042214	FCI	dwg no VExx30x000J0G sheet 1 of 1 size A4
				engr	EVIN ZHONG 042214		
				chr	HANKE FENG 042214		
				appd	SHI JUN 042214		type CUSTOMER Drawing
sheet index	revision	A					
	sheet	1					

Downloaded from Arrow.com.