Technical data // P25SMT 1 03 TR

PTR HARTMANN
A Phoenix Mecano Company

Rotary Code Switch

SMT Gull Wing Connection - Surface Mount Technology

Highlights

- 2.5 mm height
- 7.0 mm length
- Lateral C-contact
- Contacts with abrasion resistant hard gold plating
- Solid, tinned PCB pins

Mechanical Data

Type	horizontal
Fixation mode	SMT
Height	2.5 mm
Length	7.0 mm
Width	7.0 mm
Pin connection	3+3 lateral C-contact
Torque	initial min. 0.7 Ncm
Mechanical lifetime	2.500 steps
Positions per rotation	10 | 16
Perm. ambient temperature	-50 °C ... +125 °C
Perm. storage temperature	-55 °C ... +135 °C
Shock and vibration testing	acc. IEC 60068
Humidity	21 days at 40 °C, 93 %RH
Reflow soldering	JEDEC J-STD-020 E
Iron soldering	2 s / 340 °C

Electrical Data

Operating voltage	<= 42.0 V
Standby current	<= 0.4 A
Contact load, dynamic	<= 0.1 A
Minimum load	1.0 µA 20.0 mVDC
Test voltage	250.0 V 50 Hz / 1.0 min
Contact resistance	< 80.0 mOhm
Insulation resistance	> 100.0 MOhm

Downloaded from Arrow.com.

PTR HARTMANN
A Phoenix Mecano Company

Rotary Code Switch

SMT Gull Wing Connection - Surface Mount Technology

Technical Drawing

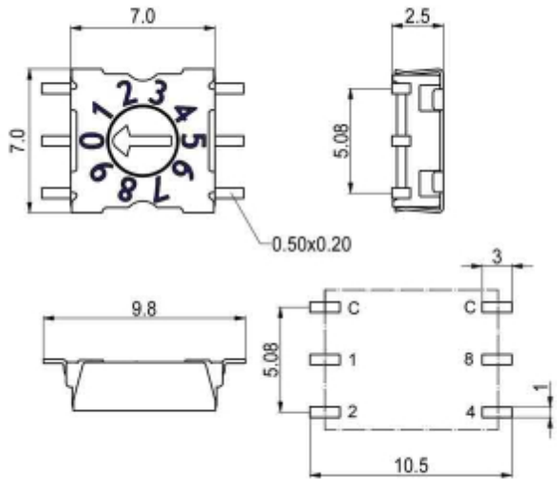

Configuration

Actuators

Arrow-shaped slot

Downloaded from Arrow.com.

PTR HARTMANN
A Phoenix Mecano Company

Rotary Code Switch

SMT Gull Wing Connection - Surface Mount Technology

Codes

Code 03 - Hexadecimal

Position	Terminals C	1	2	4	8	Marking
0	●					0
1	●	●				1
2	●		●			2
3	●	●	●			3
4	●			●		4
5	●	●		●		5
6	●		●	●		6
7	●	●	●	●		7
8	●				●	8
9	●	●			●	9
10	●		●		●	A
11	●	●	●		●	B
12	●			●	●	C
13	●	●		●	●	D
14	●		●	●	●	E
15	●	●	●	●	●	F

Hexadecimal, 16

Packing

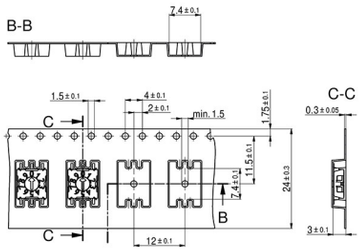

Tape on Reel Packing SMT1

Downloaded from Arrow.com.