General Description

The ICS854S204I is a low skew, high performance dual, programmable 1-to-2 Differential-to-LVDS, LVPECL Fanout Buffer. The PCLKx, nPCLKx pairs can accept most standard differential input levels. With the selection of SEL_OUT signal, outputs can be selected be to either LVDS or LVPECL levels. The ICS854S204I is characterized to operate from either a 2.5V or a 3.3V power supply. Guaranteed output and bank skew characteristics make the ICS854S204I ideal for those clock distribution applications demanding well defined performance and repeatability.

Power Supply Configuration Table

3.3V Operation	V_{DD} = 3.3V
	V_{TAP} = nc
2.5V Operation	V_{DD} = 2.5V
	V_{TAP} = 2.5V

SEL_OUT Function Table

SEL_OUT	Output Level
0	LVDS
1	LVPECL

Features

- Two programmable differential LVDS or LVPECL output banks
- Two differential clock input pairs
- PCLKx, nPCLKx pairs can accept the following differential input levels: LVDS, LVPECL, SSTL, CML
- Maximum output frequency: 3GHz
- Translates any single ended input signal to LVDS levels with resistor bias on nPCLKx inputs
- Output skew: 15ps (maximum)
- Bank skew: 15ps (maximum)
- Propagation delay: 500ps (maximum)
- Additive phase jitter, RMS: 0.15ps (typical)
- Full 3.3V or 2.5V supply modes
- -40°C to 85°C ambient operating temperature
- Available in lead-free (RoHS 6) package

Block Diagram

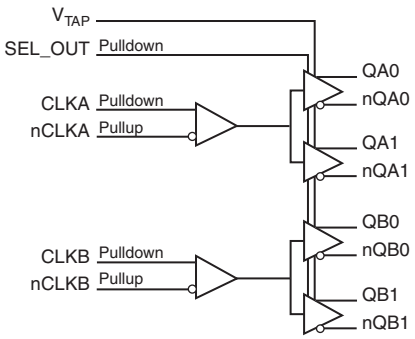

Pin Assignment

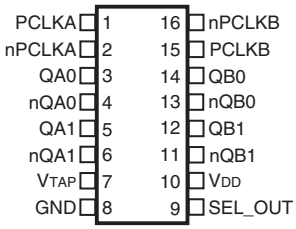

ICS854S204I

16-Lead TSSOP
4.4mm x 5.0mm x 0.925mm package body
G Package
Top View

© 2019 Renesas Electronics Corporation

Downloaded from Arrow.com.

Table 1. Pin Descriptions

Number	Name	Type		Description
1	PCLKA	Input	Pulldown	Non-inverting differential clock input.
2	nPCLKA	Input	Pullup	Inverting differential clock input.
3, 4	QA0, nQA0	Output		Differential output pair. LVDS or LVPECL interface levels.
5, 6	QA1, nQA1	Output		Differential output pair. LVDS or LVPECL interface levels.
7	V_{TAP}	Power		Power supply pin. Tie to V_{DD} for 2.5V operation. For 3.3V operation, do not connect.
8	GND	Power		Power supply ground.
9	SEL_OUT	Input	Pulldown	Output select pin. Selects between LVDS or LVPECL outputs. LVCMOS/LVTTL interface levels.
10	V_{DD}	Power		Power supply pin.
11, 12	nQB1, QB1	Output		Differential output pair. LVDS or LVPECL interface levels.
13, 14	nQB0, QB0	Output		Differential output pair. LVDS or LVPECL interface levels.
15	PCLKB	Input	Pulldown	Non-inverting differential clock input.
16	nPCLKB	Input	Pullup	Inverting differential clock input.

NOTE: *Pullup and Pulldown* refer to internal input resistors. See Table 2, *Pin Characteristics,* for typical values.

Table 2. Pin Characteristics

Symbol	Parameter	Test Conditions	Minimum	Typical	Maximum	Units
C_{IN}	Input Capacitance			1		pF
R_{PULLUP}	Input Pullup Resistor			51		kΩ
$R_{PULLDOWN}$	Input Pulldown Resistor			51		kΩ

Function Tables

Table 3. Clock Input Function Table

Inputs		Outputs		Input to Output Mode	Polarity
PCLKA or PCLKB	nPCLKA or nPCLKB	QA[0:1], QB[0:1]	nQA[0:1], nQB[0:1]		
0	1	LOW	HIGH	Differential to Differential	Non Inverting
1	0	HIGH	LOW	Differential to Differential	Non Inverting
0	Biased; NOTE 1	LOW	HIGH	Single Ended to Differential	Non Inverting
1	Biased; NOTE 1	HIGH	LOW	Single Ended to Differential	Non Inverting
Biased; NOTE 1	0	HIGH	LOW	Single Ended to Differential	Inverting
Biased; NOTE 1	1	LOW	HIGH	Single Ended to Differential	Inverting

NOTE 1: Please refer to the Application Information, *Wiring the Differential Input to Accept Single Ended Levels* section.

© 2019 Renesas Electronics Corporation

Downloaded from Arrow.com.

Absolute Maximum Ratings

NOTE: Stresses beyond those listed under *Absolute Maximum Ratings* may cause permanent damage to the device. These ratings are stress specifications only. Functional operation of product at these conditions or any conditions beyond those listed in the *DC Characteristics or AC Characteristics* is not implied. Exposure to absolute maximum rating conditions for extended periods may affect product reliability.

Item	Rating
Supply Voltage, V_{DD}	4.6V
Inputs, V_I	-0.5V to V_{DD} + 0.5V
Outputs, I_O (LVPECL) Continuous Current Surge Current Outputs, I_O (LVDS) Continuos Current Surge Current	 50mA 100mA 10mA 15mA
Package Thermal Impedance, θ_{JA}	92°C/W (0 mps)
Storage Temperature, T_{STG}	-65°C to 150°C

DC Electrical Characteristics

Table 4A. LVDS Power Supply DC Characteristics, V_{DD} = 3.3V ± 5%, T_A = -40°C to 85°C

Symbol	Parameter	Test Conditions	Minimum	Typical	Maximum	Units
V_{DD}	Power Supply Voltage		3.135	3.3	3.465	V
I_{DD}	Power Supply Current				120	mA

Table 4B. LVDS Power Supply DC Characteristics, V_{DD} = V_{TAP} = 2.5V ± 5%, T_A = -40°C to 85°C

Symbol	Parameter	Test Conditions	Minimum	Typical	Maximum	Units
V_{DD}	Power Supply Voltage		2.375	2.5	2.625	V
V_{TAP}	Power Supply Voltage		2.375	2.5	2.625	V
I_{DD}	Power Supply Current				115	mA
I_{TAP}	Power Supply Current				5	mA

Table 4C. LVPECL Power Supply DC Characteristics, V_{DD} = 3.3V ± 5%, T_A = -40°C to 85°C

Symbol	Parameter	Test Conditions	Minimum	Typical	Maximum	Units
V_{DD}	Power Supply Voltage		3.135	3.3	3.465	V
I_{DD}	Power Supply Current				66	mA

Table 4D. LVPECL Power Supply DC Characteristics, V_{DD} = V_{TAP} = 2.5V ± 5%, T_A = -40°C to 85°C

Symbol	Parameter	Test Conditions	Minimum	Typical	Maximum	Units
V_{DD}	Power Supply Voltage		2.375	2.5	2.625	V
V_{TAP}	Power Supply Voltage		2.375	2.5	2.625	V
I_{DD}	Power Supply Current				60	mA
I_{TAP}	Power Supply Current				5	mA

© 2019 Renesas Electronics Corporation

Downloaded from Arrow.com.

Table 4E. LVCMOS/LVTTL DC Characteristics, V_{DD} = 3.3V ± 5% or V_{DD} = V_{TAP} = 2.5V ± 5%, T_A = -40°C to 85°C

Symbol	Parameter		Test Conditions	Minimum	Typical	Maximum	Units
V_{IH}	Input High Voltage		V_{DD} = 3.465V	2		V_{DD} + 0.3	V
			V_{DD} = 2.625V	1.7		V_{DD} + 0.3	V
V_{IL}	Input Low Voltage		V_{DD} = 3.465V	-0.3		0.8	V
			V_{DD} = 2.625V	-0.3		0.7	V
I_{IH}	Input High Current	SEL_OUT	V_{DD} = V_{IN} = 3.465V or 2.625V			150	µA
I_{IL}	Input Low Current	SEL_OUT	V_{DD} = 3.465V or 2.625V, V_{IN} = 0V	-10			µA

Table 4F. Differential DC Characteristics, V_{DD} = 3.3V ± 5% or V_{DD} = V_{TAP} = 2.5V ± 5%, T_A = -40°C to 85°C

Symbol	Parameter		Test Conditions	Minimum	Typical	Maximum	Units
I_{IH}	Input High Current	PCLKA, PCLKB	V_{DD} = V_{IN} = 3.465V or 2.625V			150	µA
		nPCLKA, nPCLKB	V_{DD} = V_{IN} = 3.465V or 2.625V			10	µA
I_{IL}	Input Low Current	PCLKA, PCLKB	V_{DD} = 3.465V or 2.625V, V_{IN} = 0V	-10			µA
		nPCLKA, nPCLKB	V_{DD} = 3.465V or 2.625V, V_{IN} = 0V	-150			µA
V_{PP}	Peak-to-Peak Voltage			0.15		1.3	V
V_{CMR}	Common Mode Input Voltage; NOTE 1			1.2		V_{DD}	V

NOTE 1: Common mode input voltage is defined as V_{IH}.

Table 4G. LVDS DC Characteristics, V_{DD} = 3.3V ± 5%, T_A = -40°C to 85°C

Symbol	Parameter	Test Conditions	Minimum	Typical	Maximum	Units
V_{OD}	Differential Output Voltage	SEL_OUT = 0	247	350	454	mV
ΔV_{OD}	V_{OD} Magnitude Change	SEL_OUT = 0			50	mV
V_{OS}	Offset Voltage	SEL_OUT = 0	1.11	1.25	1.38	V
ΔV_{OS}	V_{OS} Magnitude Change	SEL_OUT = 0			50	mV

NOTE: Please refer to *Parameter Measurement Information* section for output information.

Table 4H. LVDS DC Characteristics, V_{DD} = V_{TAP} = 2.5V ± 5%, T_A = -40°C to 85°C

Symbol	Parameter	Test Conditions	Minimum	Typical	Maximum	Units
V_{OD}	Differential Output Voltage	SEL_OUT = 0	247	350	454	mV
ΔV_{OD}	V_{OD} Magnitude Change	SEL_OUT = 0			50	mV
V_{OS}	Offset Voltage	SEL_OUT = 0	1.08	1.21	1.34	V
ΔV_{OS}	V_{OS} Magnitude Change	SEL_OUT = 0			50	mV

NOTE: Please refer to *Parameter Measurement Information* section for output information.

© 2019 Renesas Electronics Corporation

Downloaded from Arrow.com.

Table 4I. LVPECL DC Characteristics, V_{DD} = 3.3V ± 5%, T_A = -40°C to 85°C

Symbol	Parameter	Test Conditions	Minimum	Typical	Maximum	Units
V_{OH}	Output High Voltage; NOTE 1	SEL_OUT = 1	V_{DD} – 1.3		V_{DD} – 0.8	V
V_{OL}	Output Low Voltage; NOTE 1	SEL_OUT = 1	V_{DD} – 2.0		V_{DD} – 1.6	V
V_{SWING}	Peak-to-Peak Output Voltage Swing	SEL_OUT = 1	0.6		0.9	V

NOTE 1: Outputs terminated with 50Ω to V_{DD} – 2V.

Table 4J. LVPECL DC Characteristics, V_{DD} = V_{TAP} = 2.5V ± 5%, T_A = -40°C to 85°C

Symbol	Parameter	Test Conditions	Minimum	Typical	Maximum	Units
V_{OH}	Output High Voltage; NOTE 1	SEL_OUT = 1	V_{DD} – 1.3		V_{DD} – 0.8	V
V_{OL}	Output Low Voltage; NOTE 1	SEL_OUT = 1	V_{DD} – 2.0		V_{DD} – 1.55	V
V_{SWING}	Peak-to-Peak Output Voltage Swing	SEL_OUT = 1	0.6		0.9	V

NOTE 1: Outputs terminated with 50Ω to V_{DD} – 2V.

© 2019 Renesas Electronics Corporation

Downloaded from Arrow.com.

AC Electrical Characteristics

Table 5A. LVDS AC Characteristics, V_{DD} = 3.3V ± 5%, T_A = -40°C to 85°C

Symbol	Parameter	Test Conditions	Minimum	Typical	Maximum	Units
f_{MAX}	Output Frequency				3	GHz
t_{PD}	Propagation Delay; NOTE 1				500	ps
*t*sk(o)	Output Skew; NOTE 4, 6				15	ps
*t*sk(b)	Bank Skew; NOTE 3, 4				15	ps
*t*jit	Buffer Additive Phase Jitter, RMS; Refer to Additive Phase Jitter Section	100MHz, Integration Range: 12kHz – 20MHz		0.15		ps
t_R / t_F	Output Rise/Fall Time	20% to 80%	100		200	ps
odc	Output Duty Cycle		49		51	%

NOTE: Electrical parameters are guaranteed over the specified ambient operating temperature range, which is established when the device is mounted in a test socket with maintained transverse airflow greater than 500 lfpm. The device will meet specifications after thermal equilibrium has been reached under these conditions.
NOTE: All parameters are measured at 550MHz, unless otherwise noted.
NOTE 1: Measured from the differential input crossing point to the differential output crossing point.
NOTE 2: Defined as skew between outputs at the same supply voltage and with equal load conditions. Measured at the differential cross points.
NOTE 3: Defined as skew within a bank of outputs at the same supply voltage and with equal load conditions.
NOTE 4: This parameter is defined in accordance with JEDEC Standard 65.

Table 5B. LVDS AC Characteristics, V_{DD} = V_{TAP} = 2.5V ± 5%, T_A = -40°C to 85°C

Symbol	Parameter	Test Conditions	Minimum	Typical	Maximum	Units
f_{MAX}	Output Frequency				3	GHz
t_{PD}	Propagation Delay; NOTE 1				500	ps
*t*sk(o)	Output Skew; NOTE 4, 6				15	ps
*t*sk(b)	Bank Skew; NOTE 3, 4				15	ps
*t*jit	Buffer Additive Phase Jitter, RMS; Refer to Additive Phase Jitter Section	100MHz, Integration Range: 12kHz – 20MHz		0.13		ps
t_R / t_F	Output Rise/Fall Time	20% to 80%	100		200	ps
odc	Output Duty Cycle		49		51	%

NOTE: Electrical parameters are guaranteed over the specified ambient operating temperature range, which is established when the device is mounted in a test socket with maintained transverse airflow greater than 500 lfpm. The device will meet specifications after thermal equilibrium has been reached under these conditions.
NOTE: All parameters are measured at 550MHz, unless otherwise noted.
NOTE 1: Measured from the differential input crossing point to the differential output crossing point.
NOTE 2: Defined as skew between outputs at the same supply voltage and with equal load conditions. Measured at the differential cross points.
NOTE 3: Defined as skew within a bank of outputs at the same supply voltage and with equal load conditions.
NOTE 4: This parameter is defined in accordance with JEDEC Standard 65.

© 2019 Renesas Electronics Corporation

Downloaded from Arrow.com.

Table 5C. LVPECL AC Characteristics, V_{DD} = 3.3V ± 5%, T_A = -40°C to 85°C

Symbol	Parameter	Test Conditions	Minimum	Typical	Maximum	Units
f_{MAX}	Output Frequency				3	GHz
t_{PD}	Propagation Delay; NOTE 1				500	ps
*t*sk(o)	Output Skew; NOTE 4, 6				15	ps
*t*sk(b)	Bank Skew; NOTE 3, 4				15	ps
*t*jit	Buffer Additive Phase Jitter, RMS; Refer to Additive Phase Jitter Section	100MHz, Integration Range: 12kHz – 20MHz		0.12		ps
t_R / t_F	Output Rise/Fall Time	20% to 80%	100		200	ps
odc	Output Duty Cycle		49		51	%

NOTE: Electrical parameters are guaranteed over the specified ambient operating temperature range, which is established when the device is mounted in a test socket with maintained transverse airflow greater than 500 lfpm. The device will meet specifications after thermal equilibrium has been reached under these conditions.
NOTE: All parameters are measured at 550MHz, unless otherwise noted.
NOTE 1: Measured from the differential input crossing point to the differential output crossing point.
NOTE 2: Defined as skew between outputs at the same supply voltage and with equal load conditions. Measured at the differential cross points.
NOTE 3: Defined as skew within a bank of outputs at the same supply voltage and with equal load conditions.
NOTE 4: This parameter is defined in accordance with JEDEC Standard 65.

Table 5D. LVPECL AC Characteristics, V_{DD} = V_{TAP} = 2.5V ± 5%, T_A = -40°C to 85°C

Symbol	Parameter	Test Conditions	Minimum	Typical	Maximum	Units
f_{MAX}	Output Frequency				3	GHz
t_{PD}	Propagation Delay; NOTE 1				500	ps
*t*sk(o)	Output Skew; NOTE 4, 6				15	ps
*t*sk(b)	Bank Skew; NOTE 3, 4				15	ps
*t*jit	Buffer Additive Phase Jitter, RMS; Refer to Additive Phase Jitter Section	100MHz, Integration Range: 12kHz – 20MHz		0.07		ps
t_R / t_F	Output Rise/Fall Time	20% to 80%	100		200	ps
odc	Output Duty Cycle		49		51	%

NOTE: Electrical parameters are guaranteed over the specified ambient operating temperature range, which is established when the device is mounted in a test socket with maintained transverse airflow greater than 500 lfpm. The device will meet specifications after thermal equilibrium has been reached under these conditions.
NOTE: All parameters are measured at 550MHz, unless otherwise noted.
NOTE 1: Measured from the differential input crossing point to the differential output crossing point.
NOTE 2: Defined as skew between outputs at the same supply voltage and with equal load conditions. Measured at the differential cross points.
NOTE 3: Defined as skew within a bank of outputs at the same supply voltage and with equal load conditions.
NOTE 4: This parameter is defined in accordance with JEDEC Standard 65.

© 2019 Renesas Electronics Corporation

Downloaded from Arrow.com.

Additive Phase Jitter

The spectral purity in a band at a specific offset from the fundamental compared to the power of the fundamental is called the ***dBc Phase Noise.*** This value is normally expressed using a Phase noise plot and is most often the specified plot in many applications. Phase noise is defined as the ratio of the noise power present in a 1Hz band at a specified offset from the fundamental frequency to the power value of the fundamental. This ratio is expressed in decibels (dBm) or a ratio of the power in the 1Hz band to the power in the fundamental. When the required offset is specified, the phase noise is called a ***dBc*** value, which simply means dBm at a specified offset from the fundamental. By investigating jitter in the frequency domain, we get a better understanding of its effects on the desired application over the entire time record of the signal. It is mathematically possible to calculate an expected bit error rate given a phase noise plot.

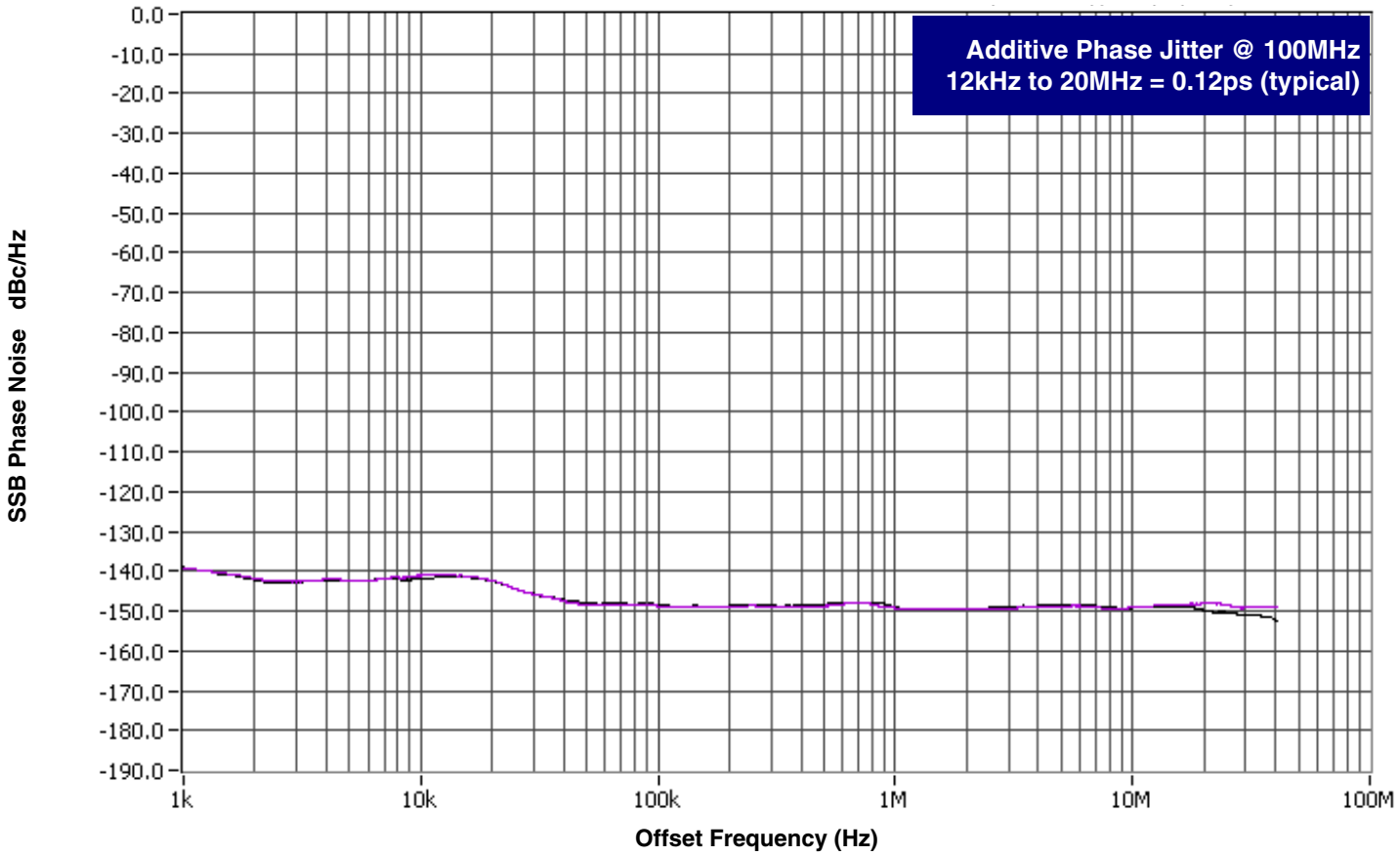

As with most timing specifications, phase noise measurements have issues relating to the limitations of the equipment. Often the noise floor of the equipment is higher than the noise floor of the device. This is illustrated above. The device meets the noise floor of what is shown, but can actually be lower. The phase noise is dependent on the input source and measurement equipment.

© 2019 Renesas Electronics Corporation

Downloaded from Arrow.com.

Parameter Measurement Information

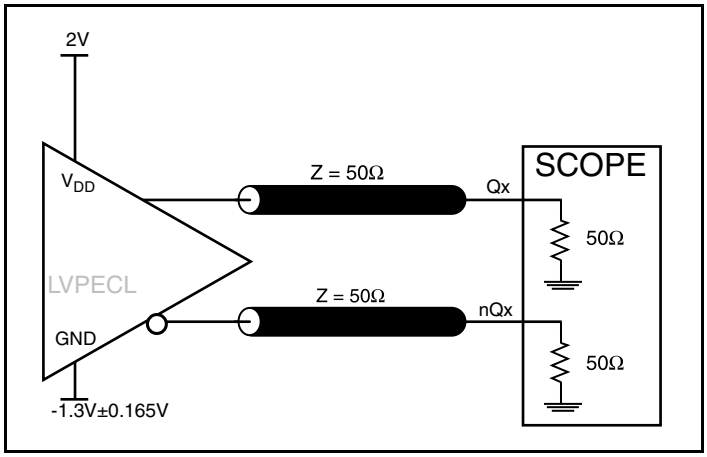

3.3V LVPECL Output Load AC Test Circuit

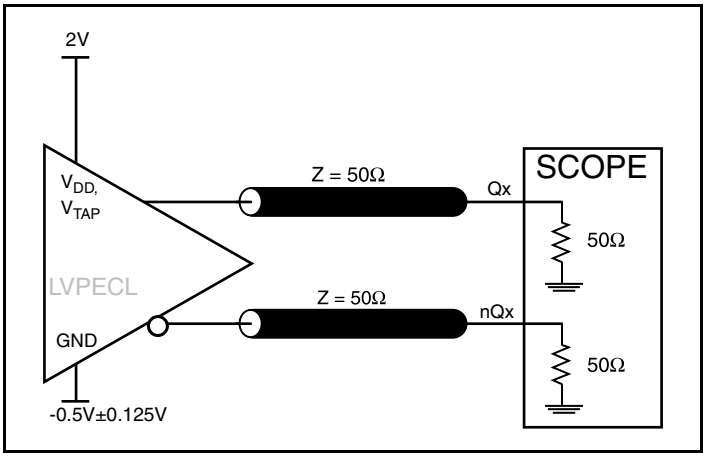

2.5V LVPECL Output Load AC Test Circuit

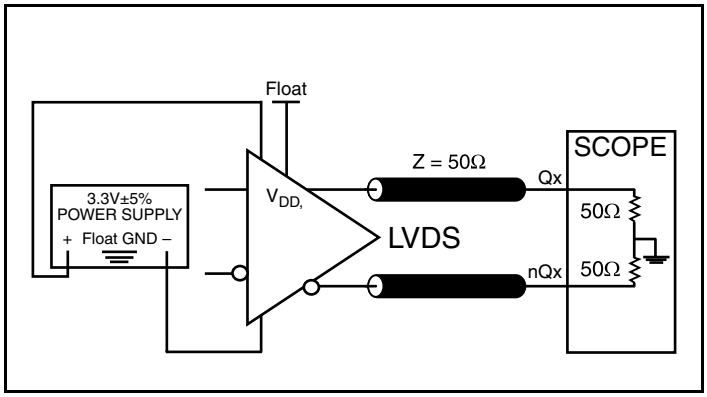

3.3V LVDS Output Load AC Test Circuit

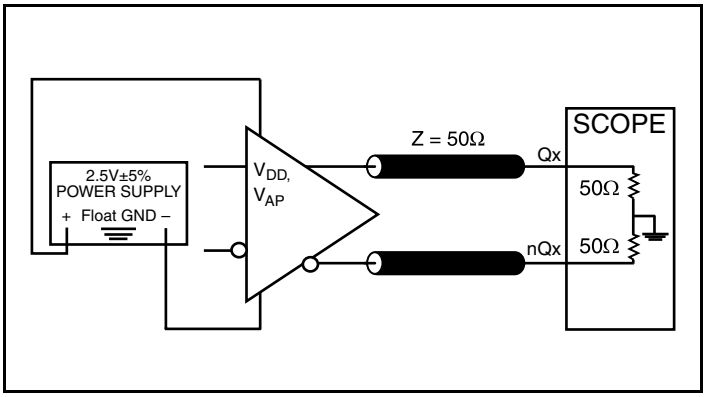

2.5V LVDS Output Load AC Test Circuit

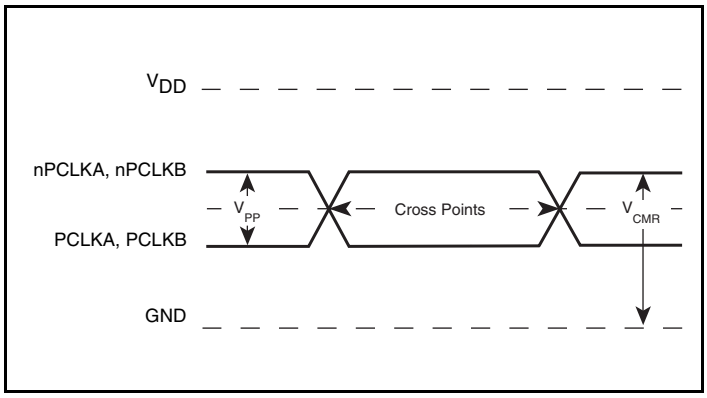

Differential Input Level

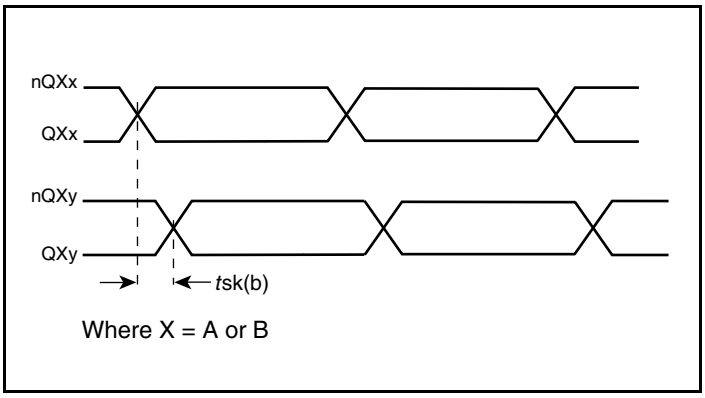

Bank Skew

© 2019 Renesas Electronics Corporation

Downloaded from Arrow.com.

Parameter Measurement Information, continued

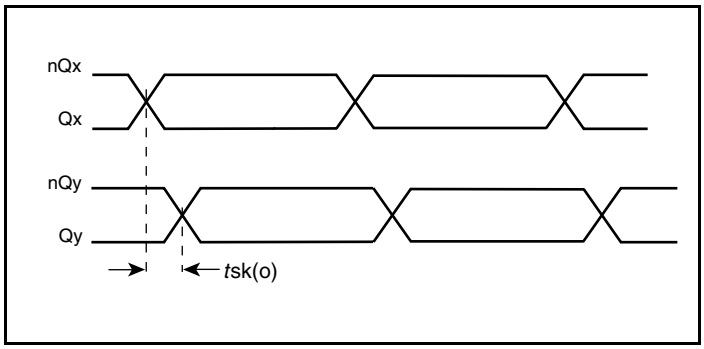

Output Skew

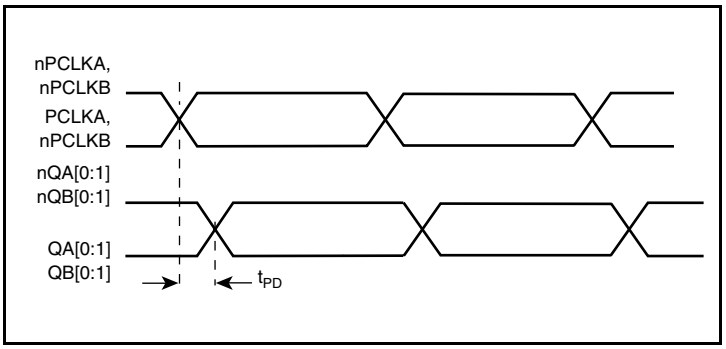

Propagation Delay

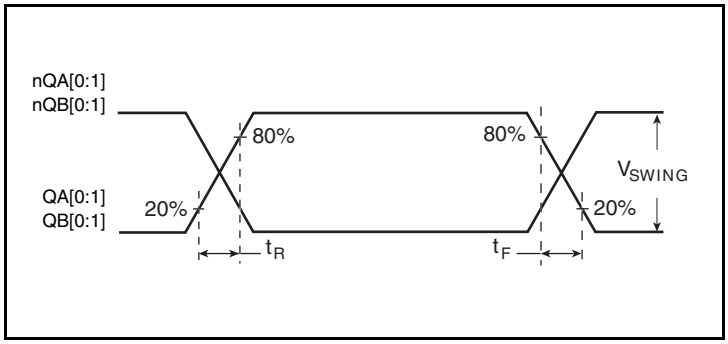

LVPECL Output Rise/Fall Time

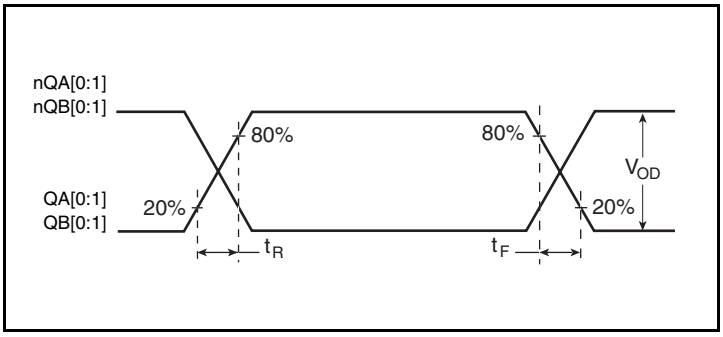

LVDS Output Rise/Fall Time

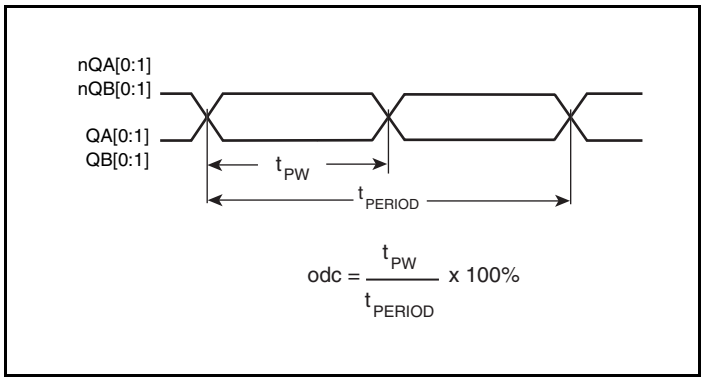

Output Duty Cycle/Pulse Width/Period

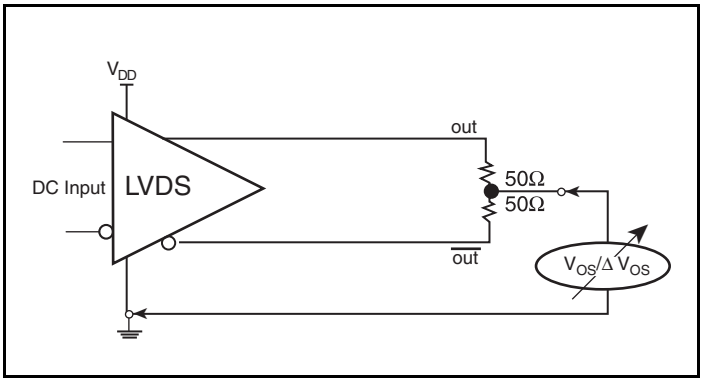

Offset Voltage Setup

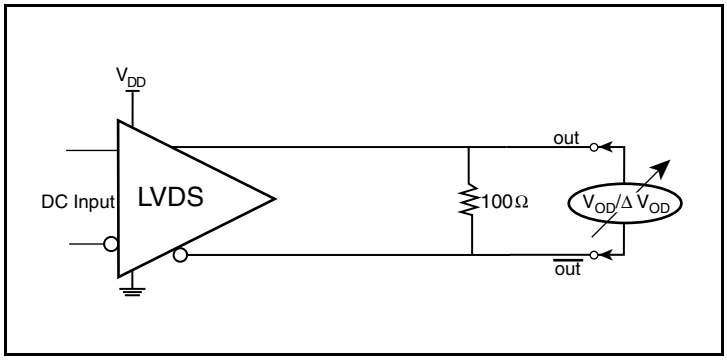

Differential Output Voltage Setup

© 2019 Renesas Electronics Corporation

Downloaded from Arrow.com.

Applications Information

Wiring the Differential Input to Accept Single-Ended Levels

Figure 1 shows how a differential input can be wired to accept single ended levels. The reference voltage $V_{REF} = V_{DD}/2$ is generated by the bias resistors R1 and R2. The bypass capacitor (C1) is used to help filter noise on the DC bias. This bias circuit should be located as close to the input pin as possible. The ratio of R1 and R2 might need to be adjusted to position the V_{REF} in the center of the input voltage swing. For example, if the input clock swing is 2.5V and V_{DD} = 3.3V, R1 and R2 value should be adjusted to set V_{REF} at 1.25V. The values below are for when both the single ended swing and V_{DD} are at the same voltage. This configuration requires that the sum of the output impedance of the driver (Ro) and the series resistance (Rs) equals the transmission line impedance. In addition, matched termination at the input will attenuate the signal in half. This can be done in one of two ways. First, R3 and R4 in parallel should equal the transmission line impedance. For most 50Ω applications, R3 and R4 can be 100Ω. The values of the resistors can be increased to reduce the loading for slower and weaker LVCMOS driver. When using single-ended signaling, the noise rejection benefits of differential signaling are reduced. Even though the differential input can handle full rail LVCMOS signaling, it is recommended that the amplitude be reduced. The datasheet specifies a lower differential amplitude, however this only applies to differential signals. For single-ended applications, the swing can be larger, however V_{IL} cannot be less than -0.3V and V_{IH} cannot be more than V_{DD} + 0.3V. Though some of the recommended components might not be used, the pads should be placed in the layout. They can be utilized for debugging purposes. The datasheet specifications are characterized and guaranteed by using a differential signal.

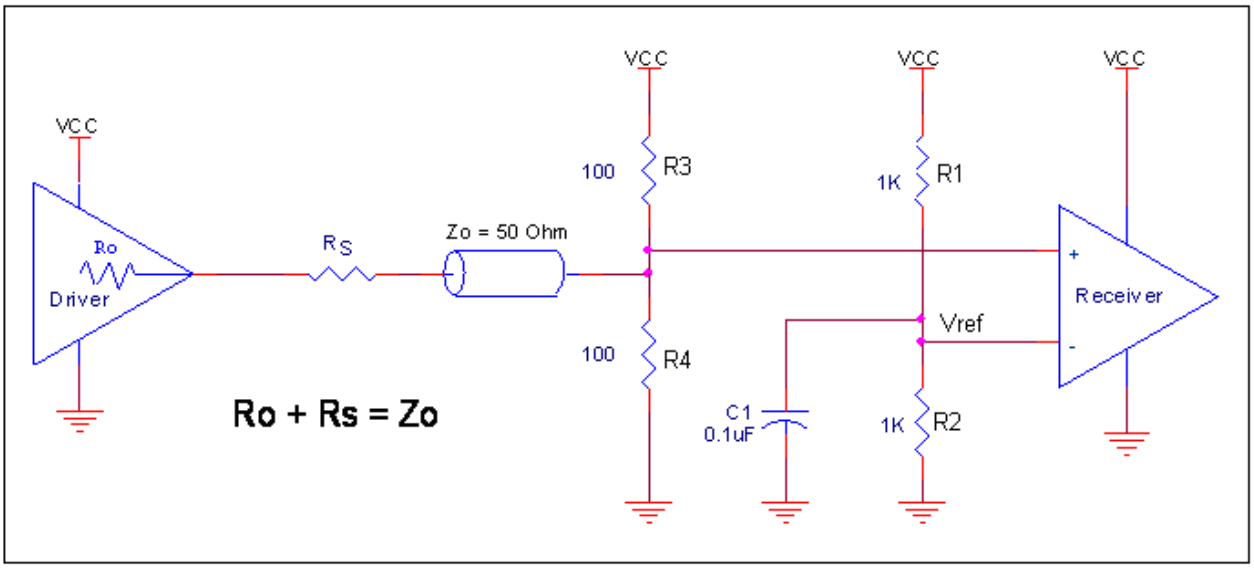

Figure 1. Recommended Schematic for Wiring a Differential Input to Accept Single-ended Levels

© 2019 Renesas Electronics Corporation

Downloaded from Arrow.com.

3.3V LVPECL Clock Input Interface

The PCLK /nPCLK accepts LVPECL, LVDS, CML, SSTL and other differential signals. Both V_{SWING} and V_{OH} must meet the V_{PP} and V_{CMR} input requirements. *Figures 2A to 2F* show interface examples for the PCLK/ nPCLK input driven by the most common driver types.

The input interfaces suggested here are examples only. If the driver is from another vendor, use their termination recommendation. Please consult with the vendor of the driver component to confirm the driver termination requirements.

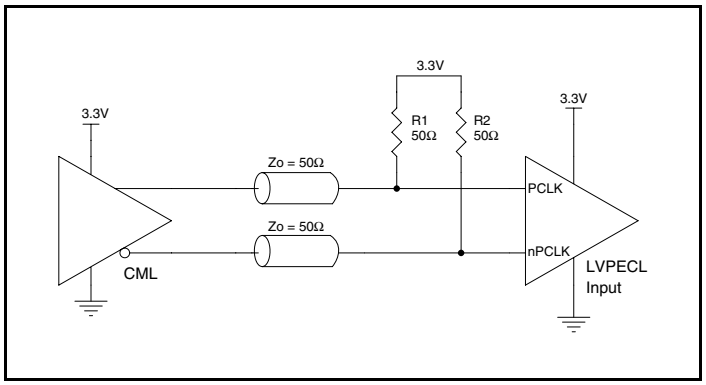

Figure 2A. PCLK/nPCLK Input Driven by a CML Driver

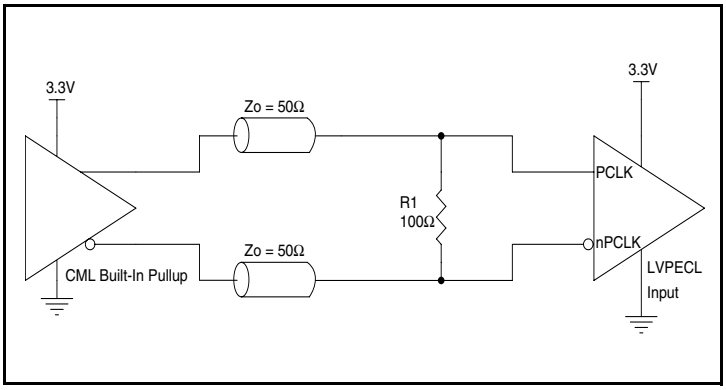

Figure 2B. PCLK/nPCLK Input Driven by a Built-In Pullup CML Driver

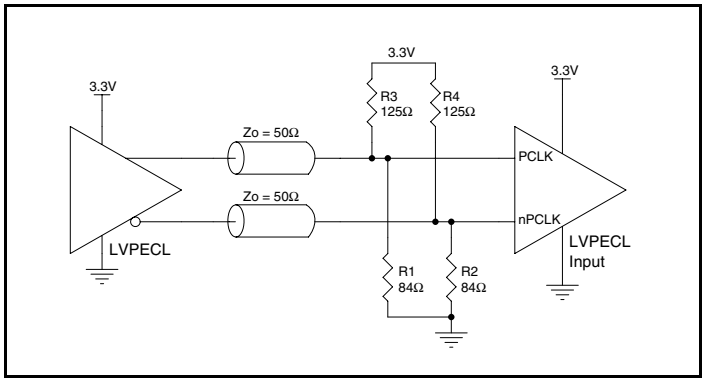

Figure 2C. PCLK/nPCLK Input Driven by a 3.3V LVPECL Driver

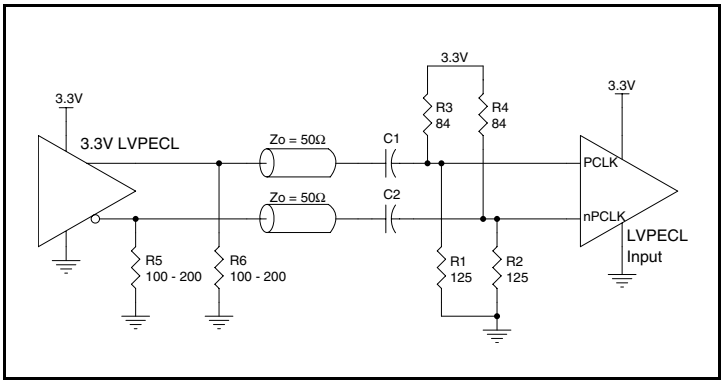

Figure 2D. PCLK/nPCLK Input Driven by a 3.3V LVPECL Driver with AC Couple

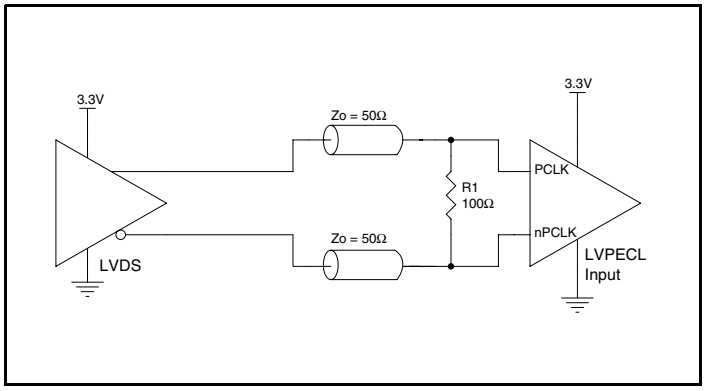

Figure 2E. PCLK/nPCLK Input Driven by a 3.3V LVDS Driver

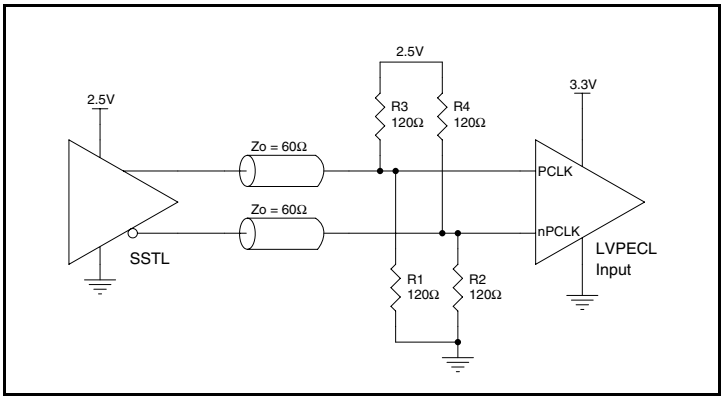

Figure 2F. PCLK/nPCLK Input Driven by a 3.3V SSTL Driver

© 2019 Renesas Electronics Corporation

Downloaded from Arrow.com.

2.5V LVPECL Clock Input Interface

The PCLK /nPCLK accepts LVPECL, LVDS, CML, SSTL and other differential signals. Both V_{SWING} and V_{OH} must meet the V_{PP} and V_{CMR} input requirements. *Figures 3A to 3F* show interface examples for the PCLK/ nPCLK input driven by the most common driver types.

The input interfaces suggested here are examples only. If the driver is from another vendor, use their termination recommendation. Please consult with the vendor of the driver component to confirm the driver termination requirements.

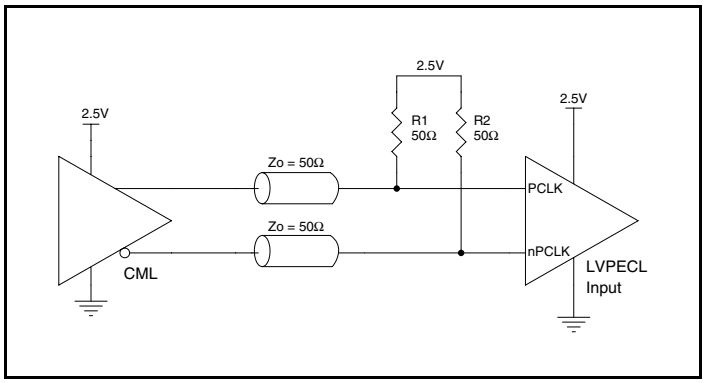

Figure 3A. PCLK/nPCLK Input Driven by a CML Driver

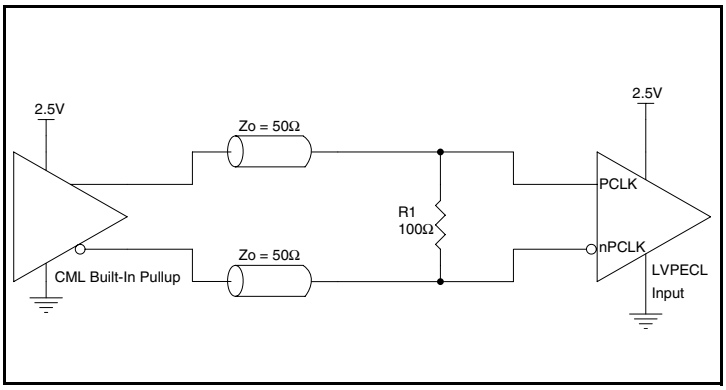

Figure 3B. PCLK/nPCLK Input Driven by a Built-In Pullup CML Driver

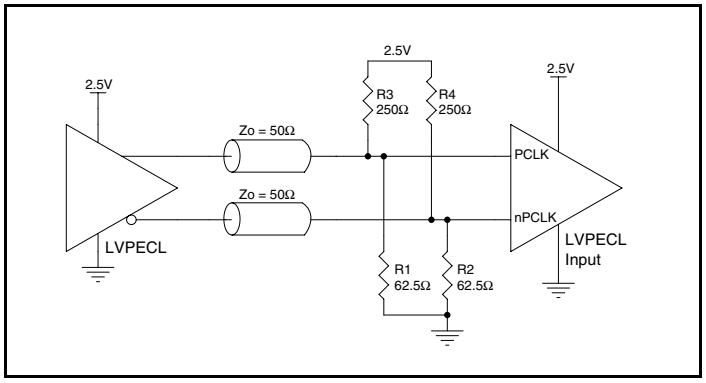

Figure 3C. PCLK/nPCLK Input Driven by a 2.5V LVPECL Driver

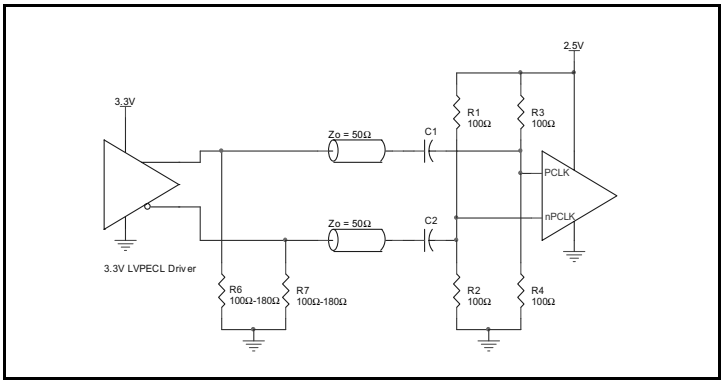

Figure 3D. PCLK/nPCLK Input Driven by a 2.5V LVPECL Driver with AC Couple

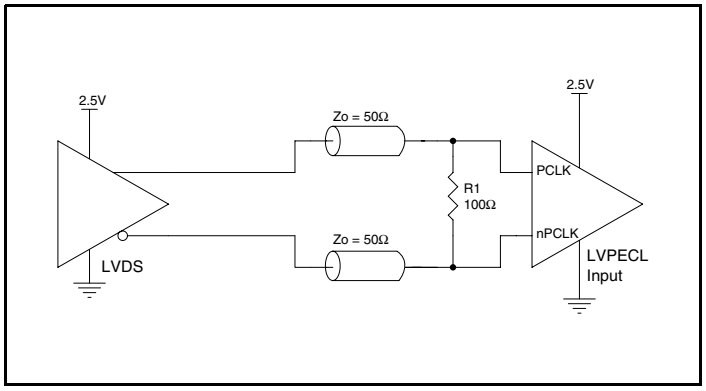

Figure 3E. PCLK/nPCLK Input Driven by a 2.5V LVDS Driver

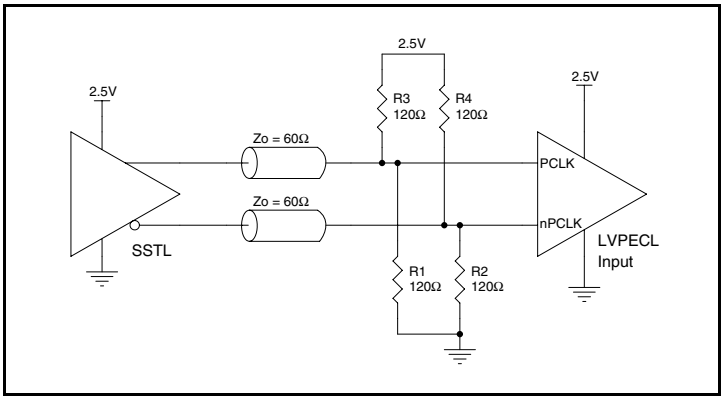

Figure 3F. PCLK/nPCLK Input Driven by a 2.5V SSTL Driver

© 2019 Renesas Electronics Corporation

Downloaded from Arrow.com.

Recommendations for Unused Input and Output Pins

Inputs:

PCLK/nPCLK Inputs

For applications not requiring the use of a differential input, both the PCLK and nPCLK pins can be left floating. Though not required, but for additional protection, a 1kΩ resistor can be tied from PCLK to ground.

Outputs:

LVPECL Outputs

All unused LVPECL outputs can be left floating. We recommend that there is no trace attached. Both sides of the differential output pair should either be left floating or terminated.

LVDS Outputs

All unused LVDS output pairs can be either left floating or terminated with 100Ω across. If they are left floating, there should be no trace attached.

Termination for 2.5V LVPECL Outputs

Figure 4A and *Figure 4B* show examples of termination for 2.5V LVPECL driver. These terminations are equivalent to terminating 50Ω to V_{DD}– 2V. For V_{DD} = 2.5V, the V_{DD} – 2V is very close to ground level. The R3 in Figure 4B can be eliminated and the termination is shown in *Figure 4C.*

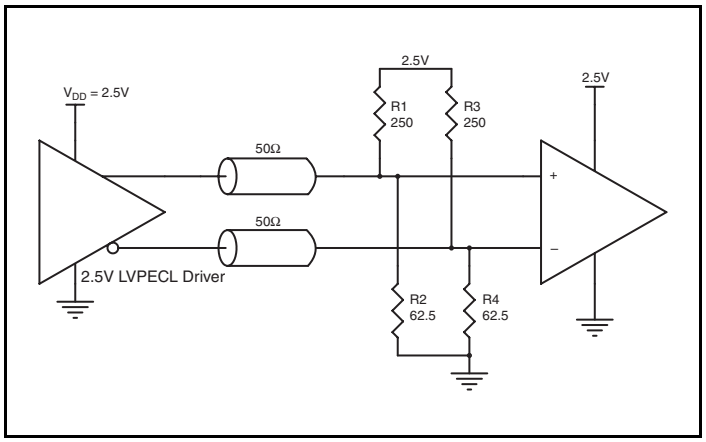

Figure 4A. 2.5V LVPECL Driver Termination Example

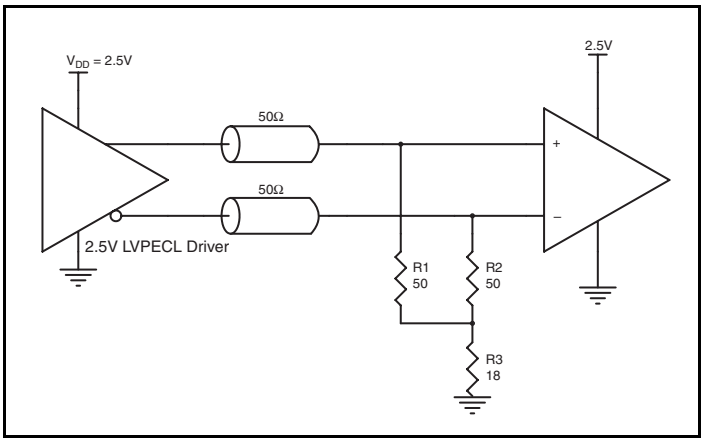

Figure 4B. 2.5V LVPECL Driver Termination Example

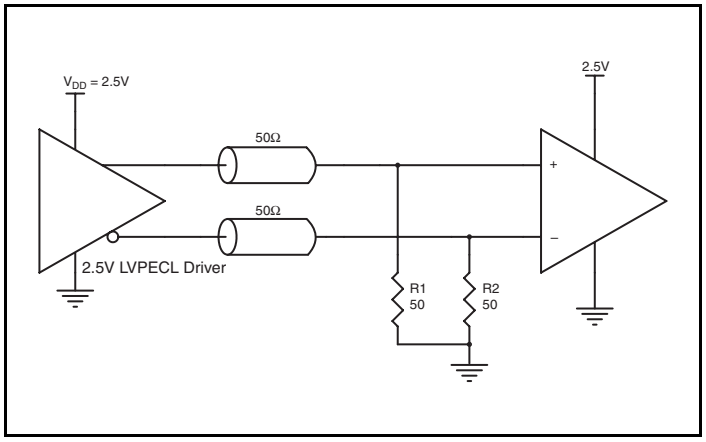

Figure 4C. 2.5V LVPECL Driver Termination Example

© 2019 Renesas Electronics Corporation

Downloaded from Arrow.com.

Termination for 3.3V LVPECL Outputs

The clock layout topology shown below is a typical termination for LVPECL outputs. The two different layouts mentioned are recommended only as guidelines.

The differential outputs are low impedance follower outputs that generate ECL/LVPECL compatible outputs. Therefore, terminating resistors (DC current path to ground) or current sources must be used for functionality. These outputs are designed to drive 50Ω transmission lines. Matched impedance techniques should be used to maximize operating frequency and minimize signal distortion. *Figures 5A and 5B* show two different layouts which are recommended only as guidelines. Other suitable clock layouts may exist and it would be recommended that the board designers simulate to guarantee compatibility across all printed circuit and clock component process variations.

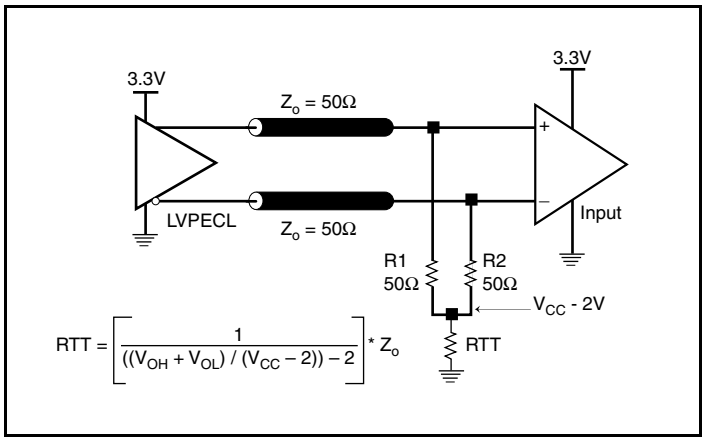

Figure 5A. 3.3V LVPECL Output Termination

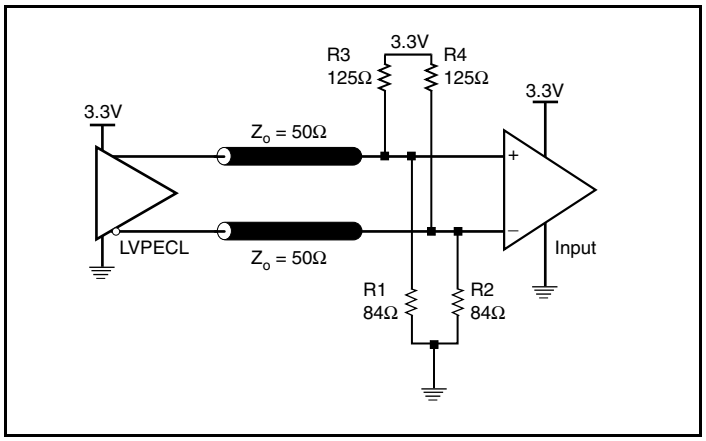

Figure 5B. 3.3V LVPECL Output Termination

© 2019 Renesas Electronics Corporation

Downloaded from Arrow.com.

LVDS Driver Termination

For a general LVDS interface, the recommended value for the termination impedance (Z_T) is between 90Ω and 132Ω. The actual value should be selected to match the differential impedance (Z_0) of your transmission line. A typical point-to-point LVDS design uses a 100Ω parallel resistor at the receiver and a 100Ω differential transmission-line environment. In order to avoid any transmission-line reflection issues, the components should be surface mounted and must be placed as close to the receiver as possible. IDT offers a full line of LVDS compliant devices with two types of output structures: current source and voltage source. The standard termination schematic as shown in *Figure 6A* can be used with either type of output structure. *Figure 6B*, which can also be used with both output types, is an optional termination with center tap capacitance to help filter common mode noise. The capacitor value should be approximately 50pF. If using a non-standard termination, it is recommended to contact IDT and confirm if the output structure is current source or voltage source type. In addition, since these outputs are LVDS compatible, the input receiver's amplitude and common-mode input range should be verified for compatibility with the output.

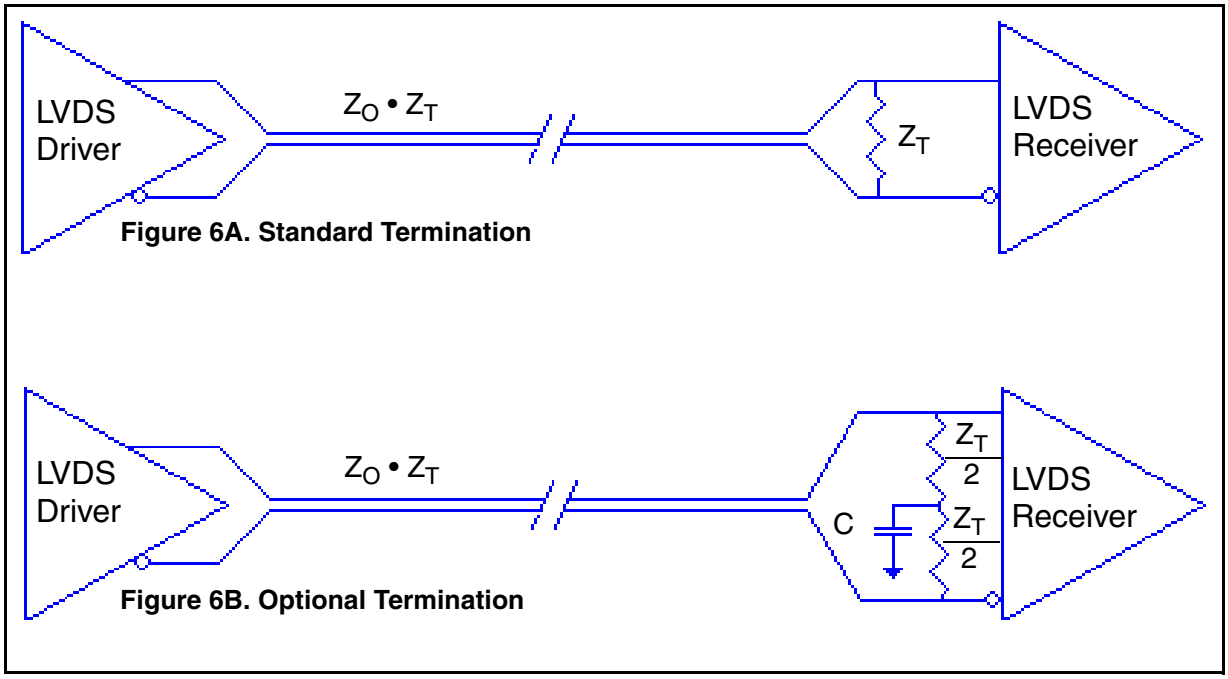

LVDS Termination

© 2019 Renesas Electronics Corporation

Downloaded from Arrow.com.

Power Considerations (3.3V LVPECL Outputs)

This section provides information on power dissipation and junction temperature for the ICS854S204I.
Equations and example calculations are also provided.

1. Power Dissipation.

The total power dissipation for the ICS854S204I is the sum of the core power plus the power dissipated in the load(s).
The following is the power dissipation for V_{DD} = 3.3V + 5% = 3.465V, which gives worst case results.

NOTE: Please refer to Section 3 for details on calculating power dissipated in the load.

- Power $(core)_{MAX}$ = V_{DD_MAX} * I_{DD_MAX} = 3.465V * 66mA = **228.69mW**
- Power $(outputs)_{MAX}$ = **30mW/Loaded Output pair**
  If all outputs are loaded, the total power is 4 * 32mW = **128mW**

Total Power$_{_MAX}$ (3.465V, with all outputs switching) = 228.69mW + 128mW = **356.69mW**

2. Junction Temperature.

Junction temperature, Tj, is the temperature at the junction of the bond wire and bond pad directly affects the reliability of the device. The maximum recommended junction temperature is 125°C. Limiting the internal transistor junction temperature, Tj, to 125°C ensures that the bond wire and bond pad temperature remains below 125°C.

The equation for Tj is as follows: Tj = θ_{JA} * Pd_total + T_A

Tj = Junction Temperature

θ_{JA} = Junction-to-Ambient Thermal Resistance

Pd_total = Total Device Power Dissipation (example calculation is in section 1 above)

T_A = Ambient Temperature

In order to calculate junction temperature, the appropriate junction-to-ambient thermal resistance θ_{JA} must be used. Assuming no air flow and a multi-layer board, the appropriate value is 92°C/W per Table 7A below.

Therefore, Tj for an ambient temperature of 85°C with all outputs switching is:

85°C + 0.357W * 92°C/W = 117.8°C. This is below the limit of 125°C.

This calculation is only an example. Tj will obviously vary depending on the number of loaded outputs, supply voltage, air flow and the type of board (multi-layer).

Table 7A. Thermal Resistance θ_{JA} for 16 Lead TSSOP, Forced Convection

θ_{JA} **vs. Air Flow**			
Meters per Second	**0**	**1**	**2.5**
Multi-Layer PCB, JEDEC Standard Test Boards	92°C/W	87.6°C/W	85.5°C/W

© 2019 Renesas Electronics Corporation

Downloaded from Arrow.com.

3. Calculations and Equations.

The purpose of this section is to calculate the power dissipation for the LVPECL output pair.

LVPECL output driver circuit and termination are shown in *Figure 7.*

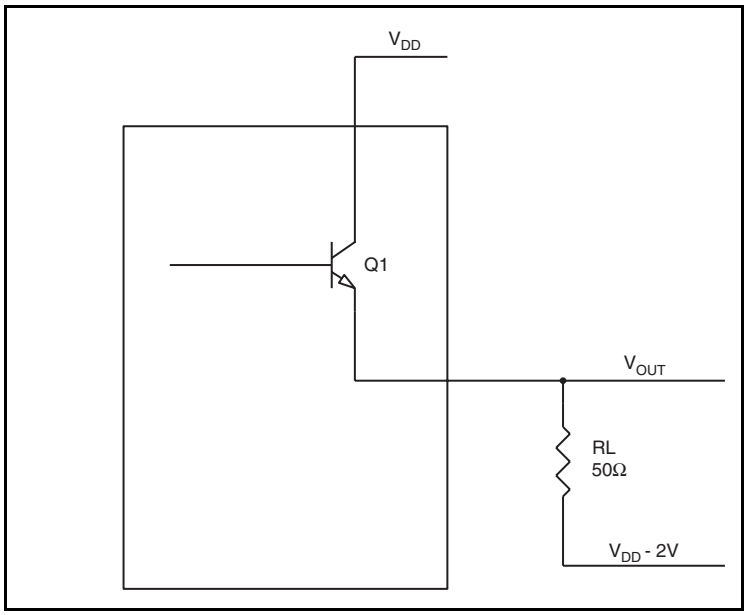

Figure 7. LVPECL Driver Circuit and Termination

To calculate worst case power dissipation into the load, use the following equations which assume a 50Ω load, and a termination voltage of V_{DD} – 2V.

- For logic high, $V_{OUT} = V_{OH_MAX} = \mathbf{V_{DD_MAX} - 0.8V}$
  $(V_{DD_MAX} - V_{OH_MAX}) = \mathbf{0.9V}$
- For logic low, $V_{OUT} = V_{OL_MAX} = \mathbf{V_{DD_MAX} - 1.6V}$
  $(V_{DD_MAX} - V_{OL_MAX}) = \mathbf{1.6V}$

Pd_H is power dissipation when the output drives high.

Pd_L is the power dissipation when the output drives low.

$Pd_H = [(V_{OH_MAX} - (V_{DD_MAX} - 2V))/R_L] * (V_{DD_MAX} - V_{OH_MAX}) = [(2V - (V_{DD_MAX} - V_{OH_MAX}))/R_L] * (V_{DD_MAX} - V_{OH_MAX}) =$
$[(2V - 0.8V)/50\Omega] * 0.8V =$ **19.2mW**

$Pd_L = [(V_{OL_MAX} - (V_{DD_MAX} - 2V))/R_L] * (V_{DD_MAX} - V_{OL_MAX}) = [(2V - (V_{DD_MAX} - V_{OL_MAX}))/R_L] * (V_{DD_MAX} - V_{OL_MAX}) =$
$[(2V - 1.6V)/50\Omega] * 1.6V =$ **12.8mW**

Total Power Dissipation per output pair = Pd_H + Pd_L = **32mW**

© 2019 Renesas Electronics Corporation

Downloaded from Arrow.com.

Power Considerations (3.3V LVDS Outputs)

This section provides information on power dissipation and junction temperature for the ICS854S204I.
Equations and example calculations are also provided.

1. Power Dissipation.

The total power dissipation for the ICS854S204I is the sum of the core power plus the power dissipated in the load(s). The following is the power dissipation for V_{DD} = 3.3V + 5% = 3.465V, which gives worst case results.

NOTE: Please refer to Section 3 for details on calculating power dissipated in the load.

- Power $(core)_{MAX} = V_{DD_MAX} * I_{DD_MAX}$ = 3.465V * 120mA = **415.8mW**

2. Junction Temperature.

Junction temperature, Tj, is the temperature at the junction of the bond wire and bond pad directly affects the reliability of the device. The maximum recommended junction temperature is 125°C. Limiting the internal transistor junction temperature, Tj, to 125°C ensures that the bond wire and bond pad temperature remains below 125°C.

The equation for Tj is as follows: $Tj = \theta_{JA} * Pd_total + T_A$

Tj = Junction Temperature

θ_{JA} = Junction-to-Ambient Thermal Resistance

Pd_total = Total Device Power Dissipation (example calculation is in section 1 above)

T_A = Ambient Temperature

In order to calculate junction temperature, the appropriate junction-to-ambient thermal resistance θ_{JA} must be used. Assuming no air flow and a multi-layer board, the appropriate value is 92°C/W per Table 7B below.

Therefore, Tj for an ambient temperature of 85°C with all outputs switching is:

85°C + 0.416W * 92°C/W = 123.3°C. This is below the limit of 125°C.

This calculation is only an example. Tj will obviously vary depending on the number of loaded outputs, supply voltage, air flow and the type of board (multi-layer).

Table 7B. Thermal Resistance θ_{JA} for 16 Lead TSSOP, Forced Convection

θ_{JA} **vs. Air Flow**			
Meters per Second	**0**	**1**	**2.5**
Multi-Layer PCB, JEDEC Standard Test Boards	92°C/W	87.6°C/W	85.5°C/W

© 2019 Renesas Electronics Corporation

Downloaded from Arrow.com.

Reliability Information

Table 8. θ_{JA} vs. Air Flow Table for a 16 Lead TSSOP

θ_{JA} vs. Air Flow			
Meters per Second	**0**	**1**	**2.5**
Multi-Layer PCB, JEDEC Standard Test Boards	92°C/W	87.6°C/W	85.5°C/W

Transistor Count

The transistor count for ICS854S204I is: 454

Package Outline and Package Dimensions

Package Outline - G Suffix for 16 Lead TSSOP

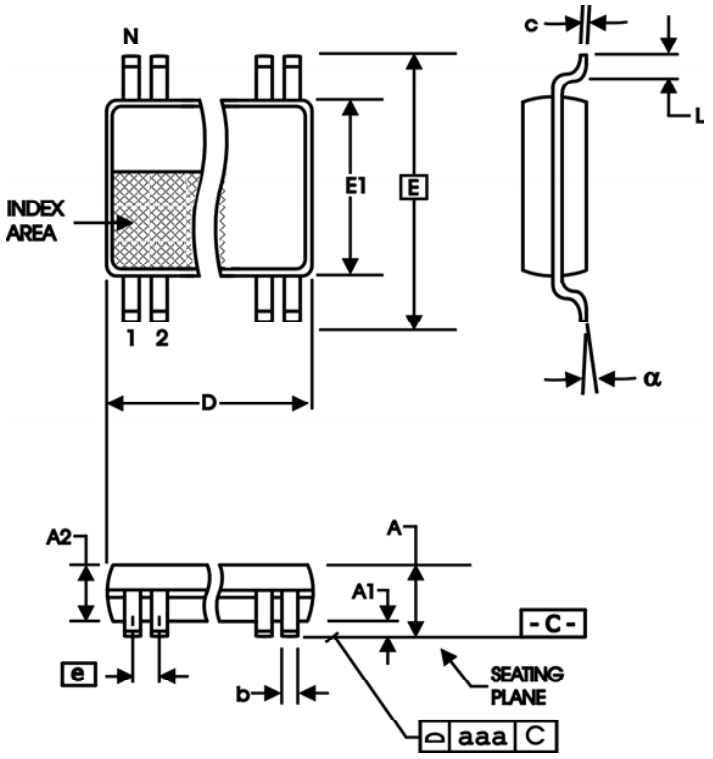

Table 9. Package Dimensions

All Dimensions in Millimeters		
Symbol	**Minimum**	**Maximum**
N	16	
A		1.20
A1	0.5	0.15
A2	0.80	1.05
b	0.19	0.30
c	0.09	0.20
D	4.90	5.10
E	6.40 Basic	
E1	4.30	4.50
e	0.65 Basic	
L	0.45	0.75
α	0°	8°
aaa		0.10

Reference Document: JEDEC Publication 95, MO-153

© 2019 Renesas Electronics Corporation

Downloaded from Arrow.com.

Ordering Information

Table 10. Ordering Information

Part/Order Number	Marking	Package	Shipping Packaging	Temperature
854S204BGILF	4S204BIL	“Lead-Free” 16 Lead TSSOP	Tube	-40°C to 85°C
854S204BGILFT	4S204BIL	“Lead-Free” 16 Lead TSSOP	2500 Tape & Reel	-40°C to 85°C

NOTE: Parts that are ordered with an "LF" suffix to the part number are the Pb-Free configuration and are RoHS compliant.

© 2019 Renesas Electronics Corporation

Downloaded from Arrow.com.

Revision History Sheet

Rev	Table	Page	Description of Change	Date
B	T4F	4	Differential DC Characteristics Table - corrected V_{CMR} spec from GND + 0.5V min. to 1.2V min; V_{DD} - 0.85V max. to V_{DD} max. Deleted NOTE. Converted datasheet format.	11/18/2011

© 2019 Renesas Electronics Corporation

Downloaded from Arrow.com.

Downloaded from Arrow.com.

Notice

1. Descriptions of circuits, software and other related information in this document are provided only to illustrate the operation of semiconductor products and application examples. You are fully responsible for the incorporation or any other use of the circuits, software, and information in the design of your product or system. Renesas Electronics disclaims any and all liability for any losses and damages incurred by you or third parties arising from the use of these circuits, software, or information.
2. Renesas Electronics hereby expressly disclaims any warranties against and liability for infringement or any other claims involving patents, copyrights, or other intellectual property rights of third parties, by or arising from the use of Renesas Electronics products or technical information described in this document, including but not limited to, the product data, drawings, charts, programs, algorithms, and application examples.
3. No license, express, implied or otherwise, is granted hereby under any patents, copyrights or other intellectual property rights of Renesas Electronics or others.
4. You shall not alter, modify, copy, or reverse engineer any Renesas Electronics product, whether in whole or in part. Renesas Electronics disclaims any and all liability for any losses or damages incurred by you or third parties arising from such alteration, modification, copying or reverse engineering.
5. Renesas Electronics products are classified according to the following two quality grades: "Standard" and "High Quality". The intended applications for each Renesas Electronics product depends on the product's quality grade, as indicated below.
   "Standard": Computers; office equipment; communications equipment; test and measurement equipment; audio and visual equipment; home electronic appliances; machine tools; personal electronic equipment; industrial robots; etc.
   "High Quality": Transportation equipment (automobiles, trains, ships, etc.); traffic control (traffic lights); large-scale communication equipment; key financial terminal systems; safety control equipment; etc.
   Unless expressly designated as a high reliability product or a product for harsh environments in a Renesas Electronics data sheet or other Renesas Electronics document, Renesas Electronics products are not intended or authorized for use in products or systems that may pose a direct threat to human life or bodily injury (artificial life support devices or systems; surgical implantations; etc.), or may cause serious property damage (space system; undersea repeaters; nuclear power control systems; aircraft control systems; key plant systems; military equipment; etc.). Renesas Electronics disclaims any and all liability for any damages or losses incurred by you or any third parties arising from the use of any Renesas Electronics product that is inconsistent with any Renesas Electronics data sheet, user's manual or other Renesas Electronics document.
6. When using Renesas Electronics products, refer to the latest product information (data sheets, user's manuals, application notes, "General Notes for Handling and Using Semiconductor Devices" in the reliability handbook, etc.), and ensure that usage conditions are within the ranges specified by Renesas Electronics with respect to maximum ratings, operating power supply voltage range, heat dissipation characteristics, installation, etc. Renesas Electronics disclaims any and all liability for any malfunctions, failure or accident arising out of the use of Renesas Electronics products outside of such specified ranges.
7. Although Renesas Electronics endeavors to improve the quality and reliability of Renesas Electronics products, semiconductor products have specific characteristics, such as the occurrence of failure at a certain rate and malfunctions under certain use conditions. Unless designated as a high reliability product or a product for harsh environments in a Renesas Electronics data sheet or other Renesas Electronics document, Renesas Electronics products are not subject to radiation resistance design. You are responsible for implementing safety measures to guard against the possibility of bodily injury, injury or damage caused by fire, and/or danger to the public in the event of a failure or malfunction of Renesas Electronics products, such as safety design for hardware and software, including but not limited to redundancy, fire control and malfunction prevention, appropriate treatment for aging degradation or any other appropriate measures. Because the evaluation of microcomputer software alone is very difficult and impractical, you are responsible for evaluating the safety of the final products or systems manufactured by you.
8. Please contact a Renesas Electronics sales office for details as to environmental matters such as the environmental compatibility of each Renesas Electronics product. You are responsible for carefully and sufficiently investigating applicable laws and regulations that regulate the inclusion or use of controlled substances, including without limitation, the EU RoHS Directive, and using Renesas Electronics products in compliance with all these applicable laws and regulations. Renesas Electronics disclaims any and all liability for damages or losses occurring as a result of your noncompliance with applicable laws and regulations.
9. Renesas Electronics products and technologies shall not be used for or incorporated into any products or systems whose manufacture, use, or sale is prohibited under any applicable domestic or foreign laws or regulations. You shall comply with any applicable export control laws and regulations promulgated and administered by the governments of any countries asserting jurisdiction over the parties or transactions.
10. It is the responsibility of the buyer or distributor of Renesas Electronics products, or any other party who distributes, disposes of, or otherwise sells or transfers the product to a third party, to notify such third party in advance of the contents and conditions set forth in this document.
11. This document shall not be reprinted, reproduced or duplicated in any form, in whole or in part, without prior written consent of Renesas Electronics.
12. Please contact a Renesas Electronics sales office if you have any questions regarding the information contained in this document or Renesas Electronics products.

(Note1) "Renesas Electronics" as used in this document means Renesas Electronics Corporation and also includes its directly or indirectly controlled subsidiaries.
(Note2) "Renesas Electronics product(s)" means any product developed or manufactured by or for Renesas Electronics.

(Rev.4.0-1 November 2017)

Corporate Headquarters

TOYOSU FORESIA, 3-2-24 Toyosu,
Koto-ku, Tokyo 135-0061, Japan
www.renesas.com

Trademarks

Renesas and the Renesas logo are trademarks of Renesas Electronics Corporation. All trademarks and registered trademarks are the property of their respective owners.

Contact Information

For further information on a product, technology, the most up-to-date version of a document, or your nearest sales office, please visit:
www.IDT.com/go/support

© 2019 Renesas Electronics Corporation. All rights reserved.

Downloaded from Arrow.com.