© COPYRIGHT 1997 BY AMP INCORPORATED. ALL RIGHTS RESERVED.

LOC	DIST
E	B

REVISIONS

P	LTR	DESCRIPTION	DATE	DWN	APVD
	O	EB00-0522-98	14/10/98	B.R	D.H
	A	EB00-0167-01	11-5-01	DRT	BB
	B	EB00-0223-01	18-6-01	DRT	BB
	C	EB00-0267-01	17-07-01	MH	BB

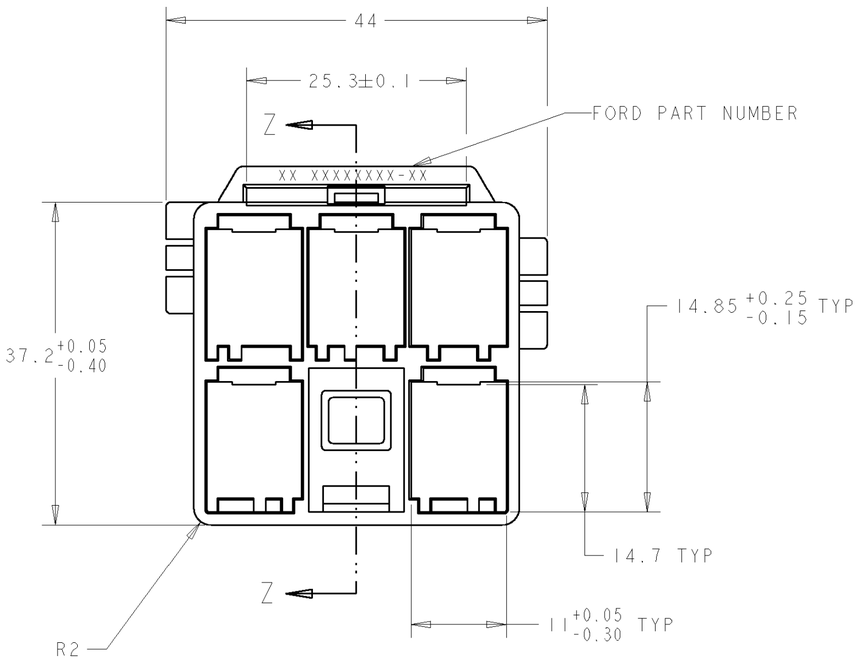

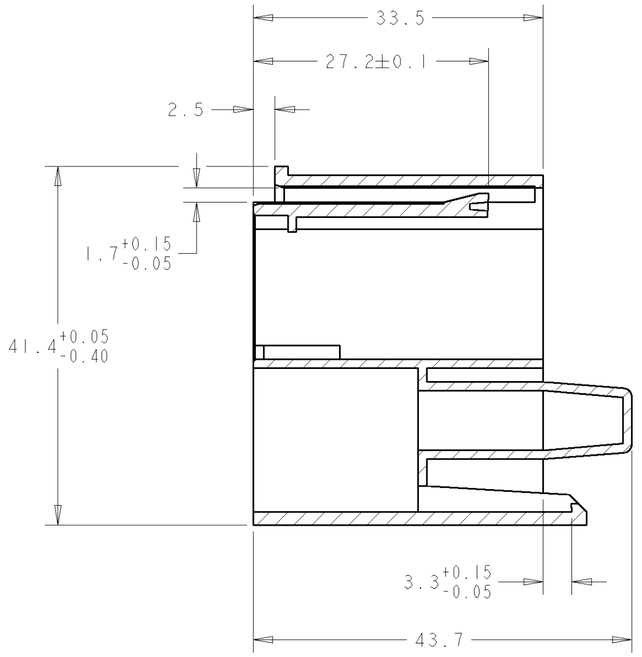

SECTION Z-Z

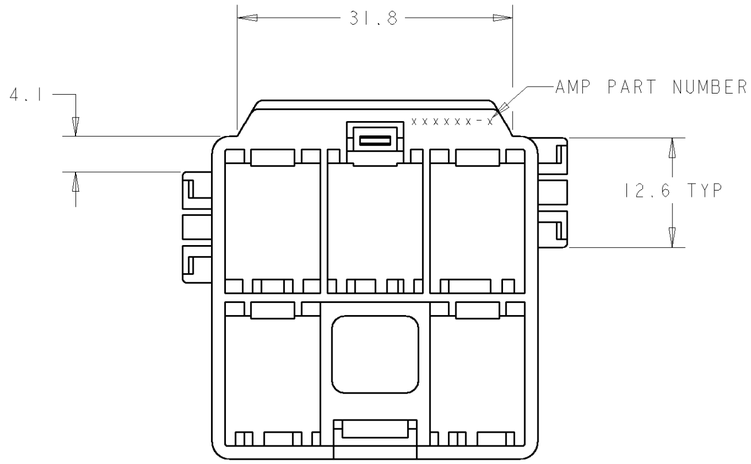

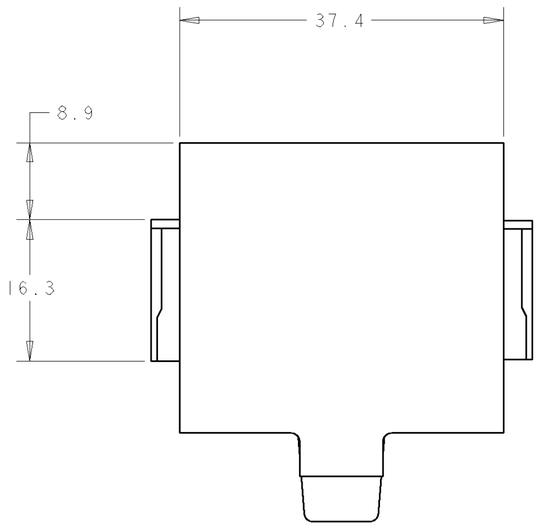

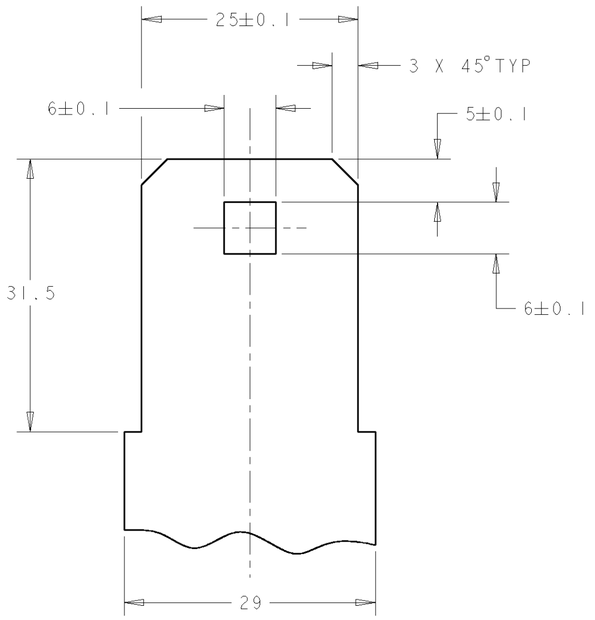

MOUNTING BRACKET DETAIL

MATERIAL 1.5±0.1 THICK.
BRACKET TO BE FREE FROM ANY
BURRS AND SHARP EDGES.

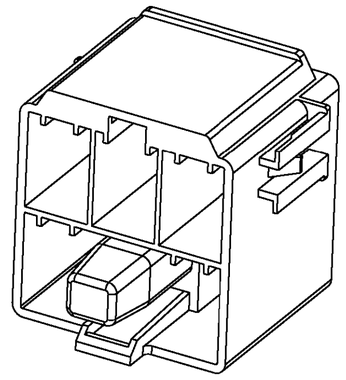

CODE-A

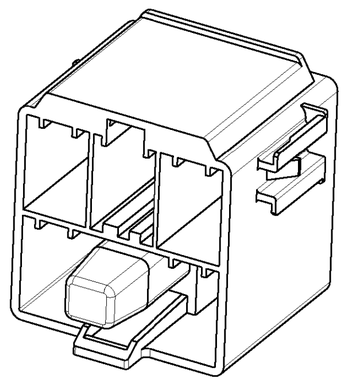

CODE-B

699351-1	B	YELLOW	PBT GF15%	2M5T-14A541-AAA	699345-2
699351-1 AND 699351-2	A	BLACK	PBT GF15%	98 AG14A541-LAC	699345-1
MATES WITH	CODE	COLOUR	MATERIAL	FORD PART No	PART NUMBER

THIS DRAWING IS A CONTROLLED DOCUMENT FOR AMP INCORPORATED. IT IS SUBJECT TO CHANGE AND THE CONTROLLING ENGINEERING ORGANIZATION SHOULD BE CONTACTED FOR THE LATEST REVISION.

DWN B.ROLLINS 16-Sep-97
CHK D.HAYWOOD 16/9/97
APVD M.WHELAN 16/9/97

AMP of Great Britain Ltd, Stanmore, Middlesex, HA7 4RS.

DIMENSIONS IN m.m
THIRD ANGLE PROJECTION

TOLERANCES UNLESS OTHERWISE SPECIFIED:
LINEAR:- ±0.2 ~~±0.5~~
ANGULAR:- ±1°

MATERIAL SEE CHART
FINISH SEE CHART

PRODUCT SPEC -
APPLICATION SPEC -
WEIGHT -

NAME TAB MODULE FRAME -

SIZE A2 | CAGE CODE 00779 | DRAWING NO C-699345

CUSTOMER DRAWING

SCALE 2:1 | SHEET 1 OF 1 | REV C

Downloaded from Arrow.com.