THIS DRAWING IS UNPUBLISHED. RELEASED FOR PUBLICATION -,- .
© COPYRIGHT – By – ALL RIGHTS RESERVED.

LOC	DIST
—	—

REVISIONS

P	LTR	DESCRIPTION	DATE	DWN	APVD
	A	DRAWING RELEASE	07DEC2011	CEP	CEP

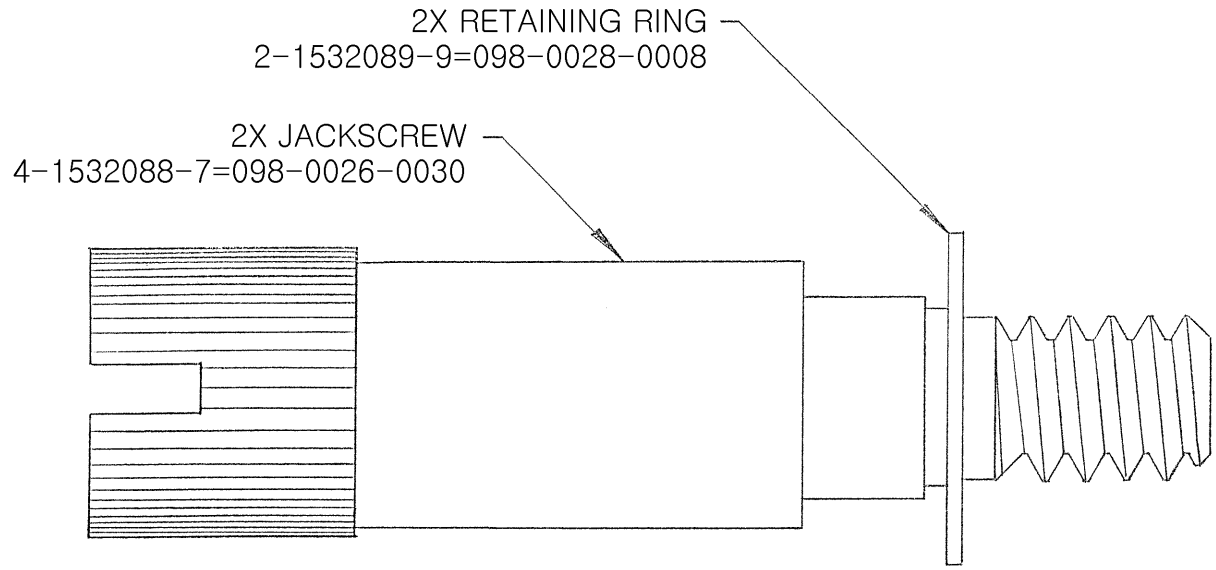

NOTES:

1. PARTS TO BE PACKAGED LOOSE AND NOT ASSEMBLED.

THIS DRAWING IS A CONTROLLED DOCUMENT.

DIMENSIONS: INCHES

TOLERANCES UNLESS OTHERWISE SPECIFIED:
0 PLC ± –
1 PLC ± –
2 PLC ± –
3 PLC ± –
4 PLC ± –
ANGLES ± –

MATERIAL –

FINISH –

DWN CRAIG PREVOST 06DEC2011
CHK CRAIG PREVOST 07DEC2011
APVD CRAIG PREVOST 07DEC2011
PRODUCT SPEC —
APPLICATION SPEC —
WEIGHT —

TE Connectivity

NAME
M83513/05-16 HARDWARE KIT (4-40 UNC)
JACKSCREW ASSEMBLY, HIGH PROFILE, SLOT HEAD
S96-0002-0088 (HM)

SIZE	CAGE CODE	DRAWING NO	RESTRICTED TO
A3	98278	C- 6-1532137-3	—

CUSTOMER DRAWING | SCALE N/A | SHEET 1 OF 1 | REV A

1470-19 (3/11)

Downloaded from Arrow.com.