DATE	REV	ECN	APP'D. BY
–	A0	–	–

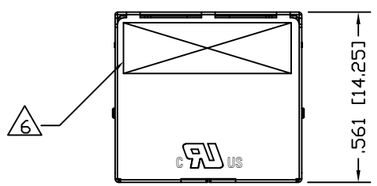

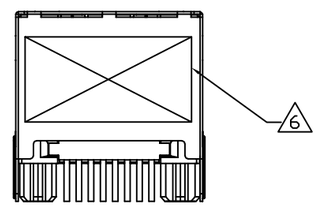

BACK VIEW

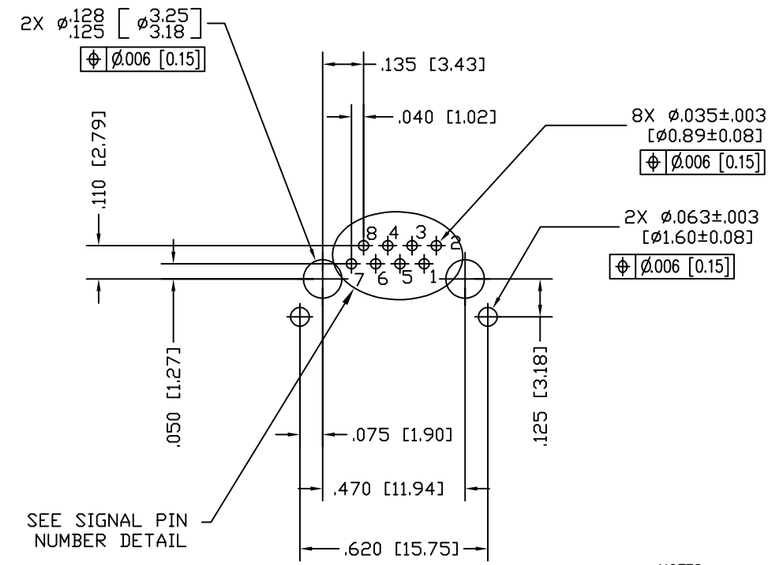

P.C.B. RECOMMENDED HOLE LAYOUT
SEEN FROM COMPONENT SIDE

ALL CENTERLINE DIMENSIONS ARE BASIC.

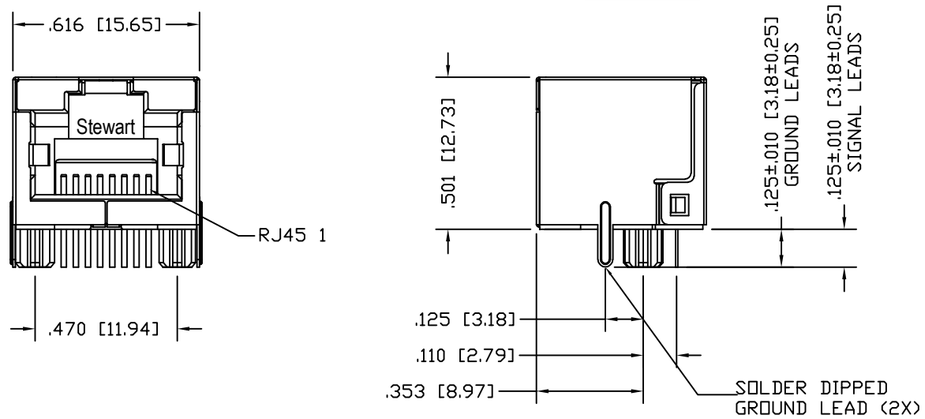

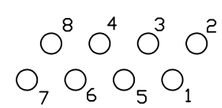

SIGNAL PIN NUMBER DETAIL

NOTES:

1. CONNECTOR MATERIALS:
   HOUSING: THERMOPLASTIC UL94 V-0
   CONTACTS/SHIELD: COPPER ALLOY
   SHIELD PLATING: NICKEL OR TIN
   CONTACT PLATING: SELECTIVE GOLD IN CONTACT AREA
   SEE CHART FOR PART NUMBER
2. DIMENSIONS AND TOLERANCES COMPLY WITH TIA-1096 STANDARD.
3. DIELECTRIC WITHSTANDING VOLTAGE (CONTACT TO SHIELD) : 2250VDC
4. HIGH TEMPERATURE PLASTIC; WAVE SOLDER COMPATIBLE TO 260°C
5. FOR PRODUCT SPECIFICATION SEE PR026-01
6. LOGO, PART NUMBER AND DATE CODE LOCATED APROX. IN THIS AREA.
7. FOR PROPER JACK FUNCTION AND PERFORMANCE, TIA-1096 COMPLIANT PLUGS MUST BE USED.

50 MICRO-INCHES [1.27um]	SS-60300-079
CONTACT PLATING IN MATING AREA	PART NUMBER

THIRD ANGLE PROJECTION

stewart CONNECTOR a bel group
11118 Susquehanna Trail South
Glen Rock, PA 17327-9199
(717) 235-7512
http://www.stewartconnector.com

DO NOT SCALE DRAWING

DRAWING IS SUBJECT TO CHANGE WITHOUT NOTICE

DIMENSIONS: INCHES [METRIC]

UNLESS OTHERWISE SPECIFIED TOLERANCES ARE ±.005 [0.13] ANGLES ARE ± 1°

SHEET NO. 1 OF 1

TITLE: 10G, 5G, 2.5G, HORIZONTAL SHIELDED JACK

THIS DRAWING AND THE SUBJECT MATTER SHOWN THEREON ARE CONFIDENTIAL AND THE PROPRIETARY PROPERTY OF STEWART CONNECTOR AND SHALL NOT BE REPRODUCED, COPIED, OR USED IN ANY MANNER WITHOUT PRIOR WRITTEN CONSENT OF STEWART CONNECTOR. ONE OR MORE U.S. PATENTS MAY APPLY TO THIS PRODUCT. FOR DETAILS, PLEASE VISIT: HTTP://BELFUSE.COM/STEWART/STEWART_PATENTS/

DRN BY:	TRM	DATE	8-28-17
APPD BY:	DHG	DATE	8-28-17
DWG NO.	CT600188	REV.	A0

RoHS

AutoCAD

Downloaded from Arrow.com.