B5L

3D TOF Sensor Module

Real-time 3D sensing of distance to humans or objects

- **Ambient light immunity equivalent to 100,000 lx, allowing measurement even in bright places. *1**
- **High output accuracy of ±2% (2 m) for compensated signals. *2**
- **Long life of approx. 5 years under continuous driving thanks to OMRON's unique circuit design and heat emission design. *3**
- **With interference prevention function *4**

*1. The accuracy of product specifications is not guaranteed.
*2. According to OMRON's evaluation method
*3. The result of reliability acceleration test at the ambient temperature of 20°C and the humidity of 65%RH, not the product warranty period.
*4. Up to 17 ID settings can be made depending on the command.
When this function runs, the accuracy of product specifications is not guaranteed for settings other than ID=8 (default).

Refer to **"Precautions"** on **page 7**.

Part Number Structure

B5L-A □ □-□01-□ □ □
(1) (2) (3) (4)

(1) Light source
2: LED NIR 940 nm

(2) Angle of view
S: 90°

(3) Communication
U: USB2.0

(4) NIR transmission filter
010: Available (Built-in)

Type

■ Device [Dimensions➔P.6]

Detection principle	Detection range (white paper)	NIR transmission filter	Model	Minimum delivery unit
TOF (Time of Flight)		Available (Built-in)	**B5L-A2S-U01-010**	1 pc

Product-related materials, such as:
- Datasheet
- User's Manual (Manual No.: E596-E1)
- Evaluation Software
- Sample Code

can be downloaded from the following website:
https://www.components.omron.com/product-detail?partNumber=B5L

● Definition of terms used in this document

"The Product": Refers to B5L-A2S-U01-010, consisting of "Device" and "SDK".
"The Product" as described herein refers to the entirety or part of its composition.
"Device" : Refers to 3D TOF sensor module.
"SDK" : Refers to User's Manual, Evaluation Software and Sample Code.
"NIR" : Near infrared radiation.

Downloaded from Arrow.com.

Ratings/Specifications

■ Ratings

Item	Specifications
Light source	LED NIR 940 nm
Power supply voltage	VDC24+/-10%
Power consumption (current consumption)	Average during measurement: 0.3 A *1 Maximum: 3 A (Reference) *1
Ambient temperature	Operation: 0 to +50°C *2 Storage: -20 to +60°C *2
Ambient humidity	Operation/storage: 35 to 85%RH or less *3
Tightening torque of mounting hole	0.91 to 1.37 N·m
Vibration (durability)	10 to 150 Hz, 50 m/s², complex amplitude of 0.7 mm or less Scanning 3 times each in X, Y, Z directions for 8 min
Impact (durability)	300 m/s² 3 times each in X, Y, Z directions
Appearance	Approx. 103×64.3×43.1 mm Approx. 108.6×64.3×43.1 mm (including the Connector)
Protective structure	IEC60529 IP10
Weight	Approx. 305 g
Materials	Frame: die-cast aluminum Cover: polycarbonate (PC) Filter: acrylic resin (PMMA) Heat sink: aluminum

*1. Standard mode/exposure time setting=850 (default)
*2. With no condensation or icing
*3. With no condensation

■ Specifications

Item	Specifications
Measurement distance	0.5 to 4 m
Detection resolution	Approx. 0.3°
Horizontal detection range (angle of view)	87° or above
Vertical detection range (angle of view)	67° or above
Distance accuracy	±2% (±4 cm) or less *4*5 at 2 m central part 10×10 pixels
Repeating accuracy	1% (2 cm) or less *4*5 at 2 m central part 10×10 pixels
Frame rate	Approx. 10 fps *4
Starting time	30 seconds or less *6
Warm-up time	Approx. 30 minutes *7

*4. Distance accuracy and repeating accuracy are obtained under the following conditions:
- Based on OMRON's measurement environment
- Ambient temperature: 25°C
- Standard mode/LED light projecting frequency ID=8 (default)

*5. Target object: Reflectance ratio 70% (white paper)
- Distance accuracy: Average of 100 measurements (10,000 pieces of data in total) at the central part (10×10 pixels) 2 m away from this product
- Repeating accuracy: Standard deviation of 100 measurements (10,000 pieces of data in total) at the central part (10×10 pixels) 2 m away from this product

Standard mode/exposure time setting=850 (default)
Adjustment value in shipping inspection

*6. Time from power ON until communication is possible
*7. Time from power ON until performance becomes stable

■ Communication specifications

Item	Specifications
Function	Receive commands from the host and return execution results.
Interface	USB2.0 CDC class
Communication protocol	Unique specifications. Refer to User's Manual (Manual No.: E596-E1) for details.

■ Operation mode

Operation mode	Contents
Standard mode	Turn on the HDR function *8, and calculate the distance from two measurements.
High-speed mode	Turn off the HDR function *8, and calculate the distance from one measurement.

*8. HDR function: A function that changes the shutter speed and performs the measurement multiple times.

Downloaded from Arrow.com.

■ Specifications of output data

Data name	Description
Distance data	Indicate the 3D distance between B5L's coordinate origin and the target object
Distance data in the form of orthogonal coordinate	Xo, Yo, Zo: XYZ coordinates with the coordinate origin as the origin
Distance data in the form of orthogonal coordinate rotation	Xr, Yr, Zr: Orthogonal coordinates after rotating around axes Xo, Yo, Zo at an angle set by the command
Distance data in the form of polar coordinate	r, θ, ϕ: Polar coordinates based on orthogonal coordinates
Amplitude data	Light-receiving sensitivity of each pixel when LED is illuminated 16 bits (256 gradations)

Note 1. Refer to User's Manual (Manual No.: E596-E1) for details.
Note 2. When the form of orthogonal coordinate or orthogonal coordinate rotation is specified, the distance data will be outputted in the form of PCD (Point Cloud Data).

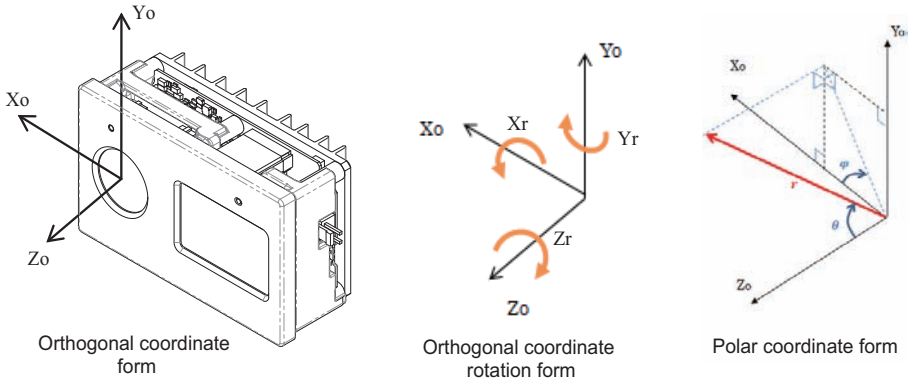

■ Data output order

Data is output in the order of 76799 to 0 from the lower right to the upper left of the 320×240 image.

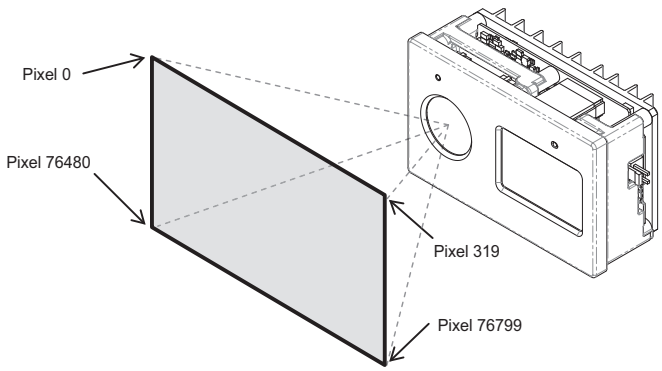

■ Data output direction

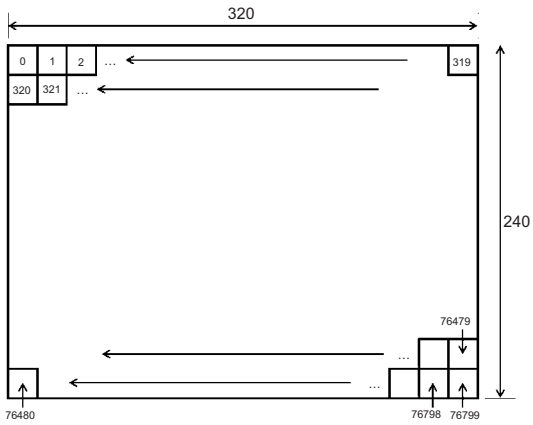

■ Field of view

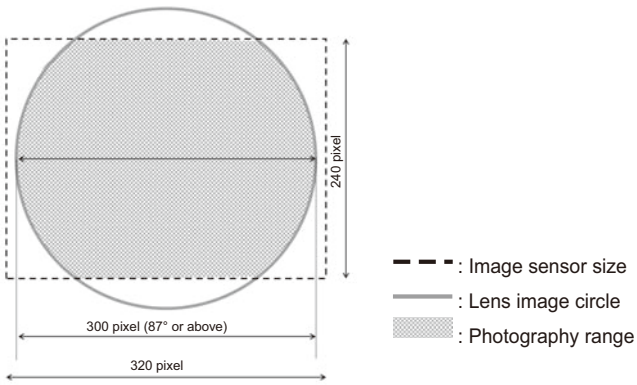

Downloaded from Arrow.com.

Connector Pin Configuration and Connection Structure

■ Connection structure

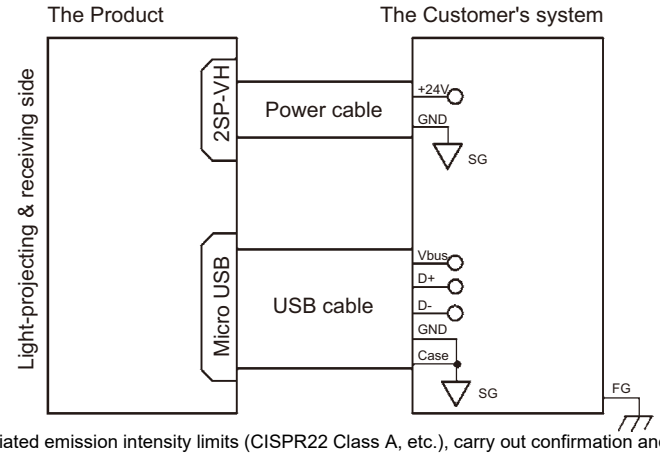

Note 1. To be certified by standards on radiated emission intensity limits (CISPR22 Class A, etc.), carry out confirmation and countermeasures for products into which the product is assembled.
Countermeasures against noise on connection wires are estimated to reduce the emission noise level.
Make the decision after fully evaluating the cable used and the routing of GND (connection with FG, etc.).
Note 2. Consideration should be given to creepage distance, etc., so that no static electricity will be applied to the frame part other than the light projecting and receiving surfaces.
Also separate the mounting hole of the product from FG.

■ Connector

Power connector: S2P-VH (manufactured by JST Connector)
(Recommended mating connector)
Housing: VHR-2M or VHR-2N (manufactured by JST Connector)
Contact: SVH-21T-P1.1 (manufactured by JST Connector)

Pin number	Signal	Description
1	Vcc	Power source DC24 V±10% 3 A
2	GND	Ground (0 V)

USB connector: MicroUSB Type B
USB2.0 standard compliant (Vbus rating: 0.5 A or less)
This sensor is a USB device. The power source of Vbus should be supplied from the host side.

Supply power source: The Product alone is not compliant with the requirements on fire-proof enclosure. Therefore, when it is assembled, use a supply power source that meets IEC 62368-1 LPS (conditions of limited power source).

Name of each part

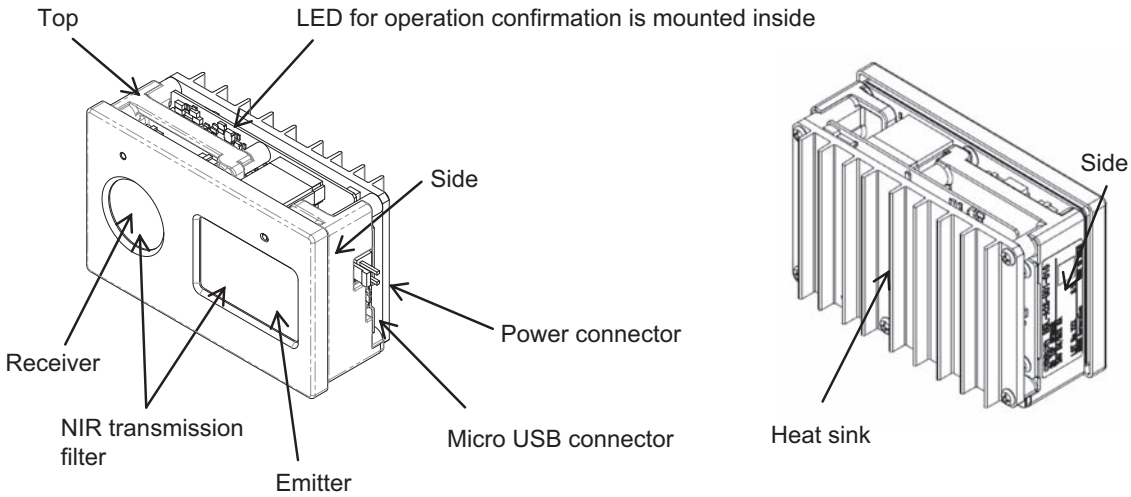

Item	Contents
LED for operation confirmation	Initial state Starting/running: light on, Abnormal: flickering Light off by command is possible when running Starting: light on, Running/abnormal: light off

Downloaded from Arrow.com.

Characteristic data (reference value)

● **Influence of sunlight**

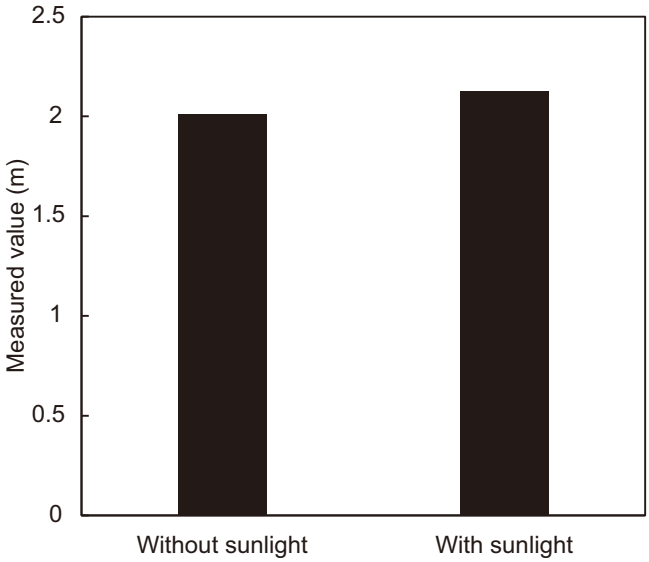

Conditions:
Target: white PP film
Angle: 0°
Measurement distance: 2 m
Illumination: 100,000 lx or above with sunlight present

● **Distance accuracy in angle direction**

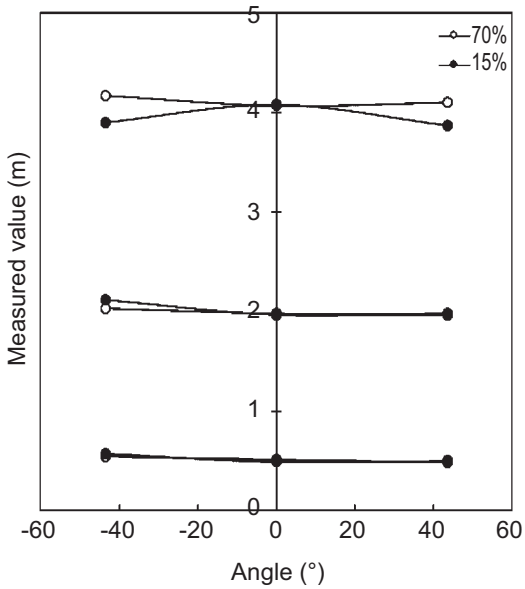

Conditions:
Target: reflectance ratio 70% (white paper),
reflectance ratio 15% (grey paper)
Angle: -43.5°, 0°, +43.5°
Measurement distance: 0.5 m, 2 m, 4 m
Ambient temperature: 25°C

● **Distance accuracy**

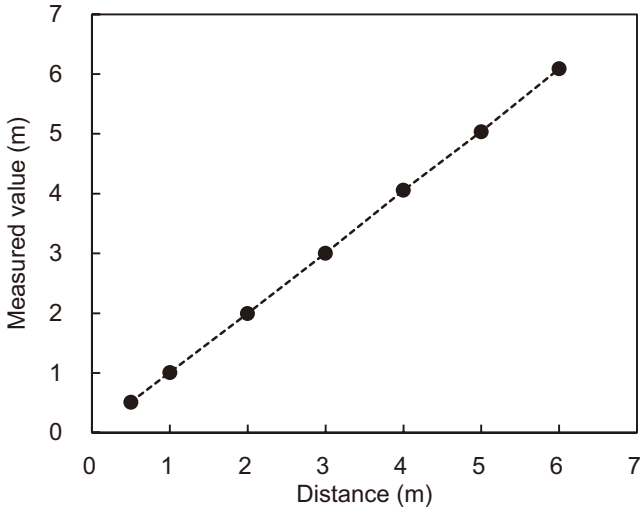

Conditions:
Target: reflectance ratio 70% (white paper)
Angle: 0°

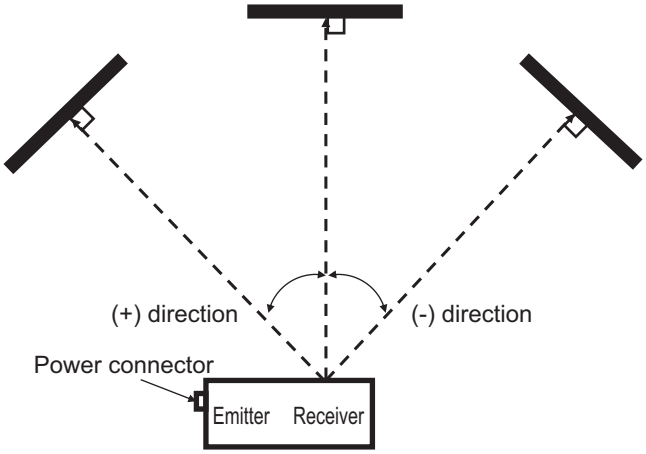

Precautions on the principle of TOF sensor

- The Product projects light and measures the distance according to the phase difference from the reflected light.
  In addition, the measurement takes time in order to accumulate the received light.
  As a result, the measurement may not be performed correctly under the following conditions:
  - Objects with high reflectance ratio (mirrors, objects with luster, etc.), objects with low reflectance ratio (black objects, etc.), transparent objects (glass, plastics, etc. with high transmission rate)
  - Objects at a distance more than (light speed/light source modulating frequency)/2 (approx. 12.5 m) (short distance measured).
  - Obstacles other than the target object for measurement are set.
  - The Product or the target object for measurement moves or vibrates.

Downloaded from Arrow.com.

Dimensions

CAD Data Please visit our CAD Data website, which is noted on the last page.

(Unit: mm)

B5L-A2S-U01-010

CAD Data

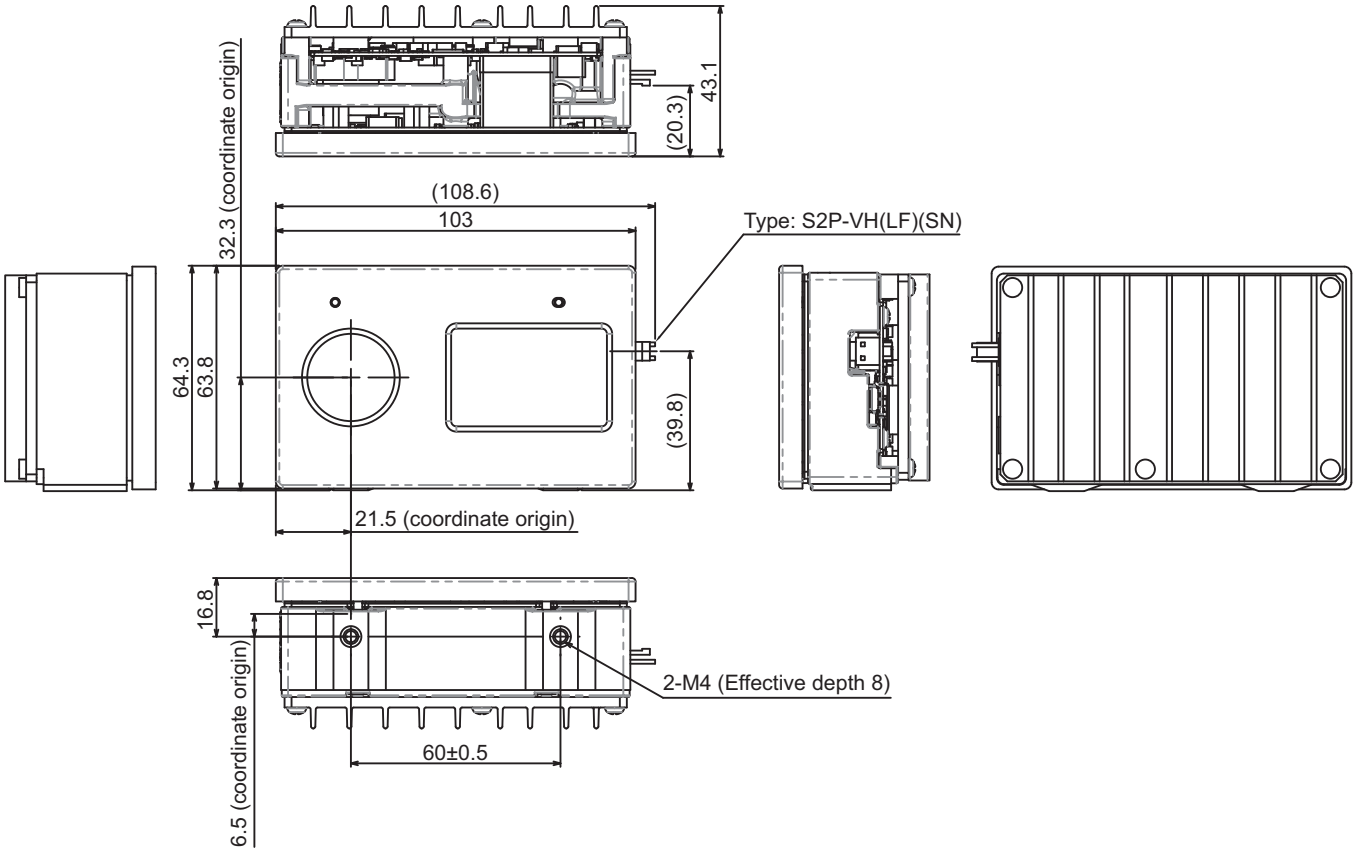

Downloaded from Arrow.com.

Precautions

Make sure to read these precautions for a safe use of the Product.

- The contents included are to ensure proper use of the Product and prevent harm and/or property damage to the user or other people.
- Warnings and cautions are defined as follows.

● Definition of Warning and Caution

⚠ Warning	Denotes a potentially hazardous situation which, if not avoided, may result in minor, moderate or serious injury, or death. It may also result in serious damage.
⚠ Caution	Denotes a potentially hazardous situation which, if not avoided, may result in minor or moderate injury, or damage.

"Damage" indicates property damage to a building, production line, household goods, other products, livestock, pets, etc.

● Examples of indications

⃠	Indicates forbidden actions.
❗	Indicates required actions.

⚠ Warning

Regarding the use or handling of the Product

Do not use the Product for safety of life or crime prevention purposes.
Do not use the Device on automobiles or other vehicles, including bikes as it may result in accidents.

Regarding the prevention of fire, electric shock, etc.

The following will result in fire, electric shock, injury or damage if ignored.

Do not touch the Device or any connected cable during a lightning storm.
Do not use the Device if it is cracked or damaged.
Do not insert foreign objects in the connector or in the holes on the various parts of the Device.
Do not use the Device in bathrooms or any other place where it may get in contact with water.
Do not touch the Device or any connected cable with wet hands.
Do not touch the electrode at the side opening of the Device during power-on.
Do not disassemble, repair, or modify the Device.

Turn the power off and stop using the Product if you notice any anomaly, including foul odor, heating, distortion or discoloration to the Device during use.
Install the cables for connecting the Device in a way that would not put strong force on them, including making sure they are not crushed in a door.

Regarding the prevention of accident or injury

The following will result in accident or injury if ignored.

Do not touch sharp parts or the exposed interior of the Device that was damaged.

⚠ Caution

Regarding the use or handling of the Product

Make sure to follow the warnings and cautions indicated in this document when using the Product.

Regarding installation

The following will result in accident, injury or damage if ignored.

Do not install the Device in an unstable location.
Install the cables in a safe way, out of the way of hands or feet.

Regarding heating

The following will result in burns if ignored.

The Device may produce heat.
Do not touch it during power-on or shortly after powering it off.

Downloaded from Arrow.com.

Precautions for Safe Use

Check the Product for physical damage upon opening its package.
It is recommended to wear gloves when opening the package.
Follow the indications listed below for a safe use of “the Product”.

(1) Installation Environment

There is potential internal deterioration and damage of internal parts of the Device.

- Do not use “the Product” in conditions exceeding the ratings for temperature and humidity.
- Do not use “the Product” in an environment where condensation occurs.
- Do not use “the Product” in an environment subjected to water, oil or chemicals spills.
- Do not use “the Product” in an environment subjected to corrosive, combustible or explosive gas.
- Do not use “the Product” in an environment where dust, salt or iron powder are present.

(2) Power Supply and Wiring

The following will result in fire if ignored.

- Make sure there is no faulty wiring of I/O terminals, etc.
- Do not connect the DC power supply terminal to AC power.
- Do not connect “the Product” to DC voltage above the rated capacity.
- Do not reverse-connect the DC power supply.
- Make sure to turn the Device off before removing cables.
- Make sure to check the Device and the connector pins for distortion or physical damage before connecting the Device to the Connector.
- Check the cables for physical damage.

(3) Others

- Treat “the Product” as industrial waste when disposing of it.
- Use the M4 screws on the fixing holes on the Device when fixing it.
- Make sure not to twist, bend or break the Device when fastening the screws. The following will result in accident or deterioration if ignored.
- Install “the Product” with attention being paid to dust prevention so that foreign objects will not enter during use. The following will result in short circuit or long-term reliability decline due to foreign objects if ignored.
- For safety’s sake, installation and wiring should be performed by professional technicians.
- Do not drop “the Product” during installation and use. The following will result in accident or deterioration if ignored.
- Install “the Product” after confirming that there are no people around under the place of installation.

Precautions for Correct Use

Observe the following precautions to prevent failure to operate and malfunctions, and to prevent adversely affecting the performance and function of “the Product”.

- Store the Device at a temperature of -20°C to +60°C and a relative humidity level of 35% to 85%.
- Do not touch the board mounted parts with bare hands. Discharge any static electricity from the user before use.
- Take proper measures against static electricity by using an antistatic wrist strap, etc. before handling “the Product”.
- Do not use “the Product” in places where the surrounding temperature goes above the rating range.
- Do not use “the Product” in a location where it would be subjected to direct sunlight.
- Do not use “the Product” in a location subject to excessive inductive or power supply noise, such as in strong magnetic or electric fields.
- Do not use “the Product” in a location where it would be subjected to strong UV light.
- Do not use “the Product” in a location where it would be subjected to radiation.
- Sufficiently evaluate the electrical characteristics of any connection to the Device.
- If the Customer designs such structures as NIR transmission filter and installs them in front of the light-projecting part or the light-receiving part, the detection performance will deteriorate due to NIR light transmittance. Therefore, design with margins giving consideration to deviation and other factors.
- The Customer should choose the power cable and USB cable after fully validating their applicability.
- Do not strongly pull the cable connected to the Device.
- Do not reversely insert the Connector.
- Do not forcibly insert any non-standard connector.
- Do not touch the light-projecting part or the light-receiving part. Clean the light-projecting part or the light-receiving part if fouled. Clean with a soft and dry cloth, avoiding damage to the light-projecting part or the light-receiving part. Never use volatile solvents such as benzine and thinner or chemical wipers, etc.
- In order to improve long-term reliability of the Device, pay sufficient attention to heat emission during installation.
- Install “the Product” at a sufficient distance from surrounding heat generating parts.
- When installing “the Product”, do not block the top surface, side surface and heat sink surface of the Device. Otherwise, heat cannot be emitted.
- “The Product” generates heat during operation. Since the surrounding temperature rises due to heating, sufficient consideration should be given to heat emission so that the surrounding temperature will not go above the rating temperature range. In addition, do not fix “the Product” upside down.
- In case of instantaneous stop or power outage, when power is restored, make sure to use “the Product” after resetting.
- Do not peel off the QR code label. Otherwise, lot tracing of “the Product” will become impossible.
- Do not use “the Product” under conditions where it would be subjected to strong interfering light.
- If multiple units of “the Product” are used simultaneously, measurement may not be performed correctly due to the influence of NIR light transmitted from sources other than the Device.
- Before using “the Product”, fully confirm if “the Product” can be used at the actual installation location.

Precautions for Correct Use

1) Since “the Product” is intended for assembly into other devices, single units of “the Product” are not certified by various standards in each country.
2) “The Product” is not used for crime prevention and does not guarantee safety.
3) “The Product” has face detection function. As such, the Customer shall take proper care of privacy, portrait right, copyright or any other rights of people.
4) “The Product” cannot be used for purposes that cause hazard or damage to people's life, body and asset.

Protection of intellectual assets

Do not do or allow any third party to do the following to the “Firmware” contained in “the Product” (built-in software for operating the Device) and “SDK”.
(a) Withdrawal of the “Firmware” from the “Device”
(b) Reverse engineering of “Firmware” and “SDK”, including disassembling and decompiling, etc.

Technical information provided by OMRON is treated as OMRON’s confidential information. Do not disclose to any third party.

Downloaded from Arrow.com.

Please check each region's Terms & Conditions by region website.

OMRON Corporation
Device & Module Solutions Company

Regional Contact

Americas
https://components.omron.com/us

Europe
https://components.omron.com/eu

Asia-Pacific
https://components.omron.com/ap

China
https://components.omron.com.cn

Korea
https://components.omron.com/kr

Japan
https://components.omron.com/jp

© OMRON Corporation 2020-2024 All Rights Reserved.
In the interest of product improvement, specifications are subject to change without notice.

Cat. No. E597-E1-03
0424 (0720)

Downloaded from Arrow.com.