DRAWING NO. 10035172

CATALOG NUMBER	ITEM NUMBER	CONDUCTOR SIZE	A	B	H	VIEW	W	REF. INDEX NUMBER	'G' DIMENSION RANGE ◁1◁2
U6CD–1	421906	#6 STR. N30	.15	.26	.82	A	.75	7	.135 – .155
U4CD–1	421904	#4 STR. N40	.17	.28	.82	A	.75	8	.159 – .179
U3CD–1	421903	#3 STR. N50	.19	.30	.82	A	.75	9	.177 – .197
U2CD–1	421902	#2 STR. N60	.21	.32	.82	A	.75	10	.197 – .217
U1CD–1	421901	#1 STR. N75	.23	.34	.82	A	.81	11	.216 – .236
U25D–1	421925	1/0 STR. N100	.26	.37	.82	A	.81	12	.246 – .266
U26D–1	421926	2/0 STR. N125	.28	.39	.82	A	.81	13	.271 – .291
U27D–1	421927	3/0 STR. N150	.31	.43	.82	A	.81	14	.311 – .331
U28D–1	421928	4/0 STR. N200	.35	.49	1.06	B	.81	15	.368 – .388
U29D–1	421929	250 kcmil N250	.38	.53	1.06	B	.81	16	.410 – .430
U30D–1	421930	300 kcmil N300	.41	.58	1.06	B	.81	17	.457 – .477
U31D–1	421931	350 kcmil	.45	.64	1.06	B	.81	18	.515 – .535
U32D–1	421932	400 kcmil N400	.47	.67	1.06	B	.81	19	.554 – .574
U33D–1	421056	450 kcmil N450	.51	.74	1.06	B	.81	326–538	.594 – .614
U34D–1	421934	500 kcmil N500	.54	.75	1.06	B	FULL WIDTH	20	.631 – .651
U27D–2	S0007903	1/0 ALUM.	.31	.82	.82	A	.81	516	.264 – .284 ◁3
U29D–2	10013158	2/0 ALUM. 250 kcmil CU.	.38	.48	1.06	B	.81	517	.363 – .383 ◁3
U31D–2	10019904	4/0 ALUM.	.45	.59	1.06	B	.81	519	.468 – .486 ◁3

REV.	DATE	DESCRIPTION	ECO	BY	C'K'D.
B	5/19/09	CAT. # U33D1, CHNG'D REF. INDEX FROM 326–338 TO 326–538	18079	PL	PL

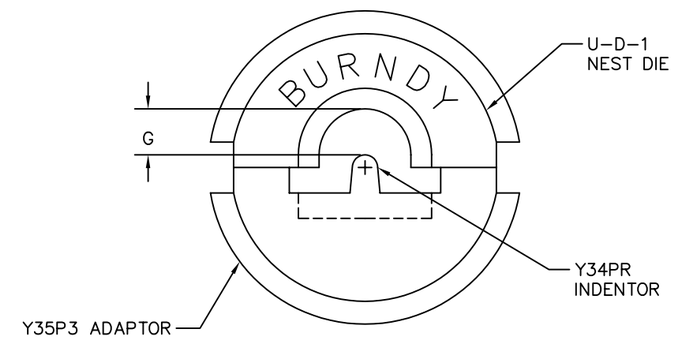

'G' DIM. DIAGRAM ◁1◁2

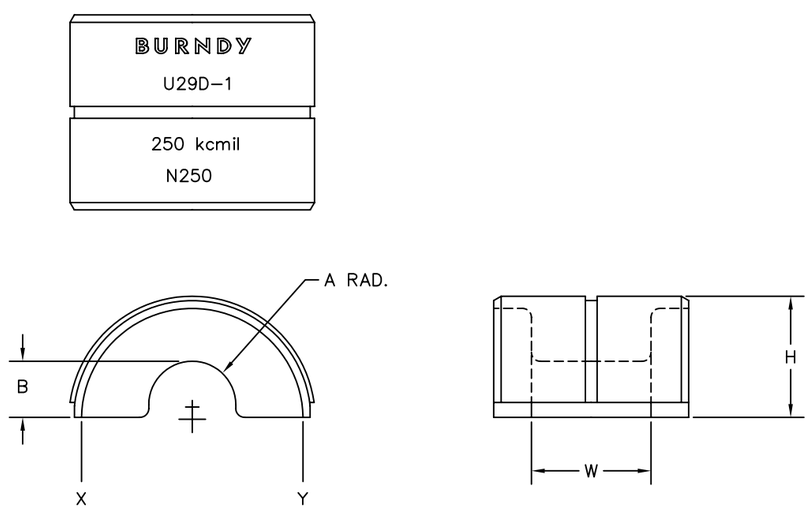

VIEW 'A'

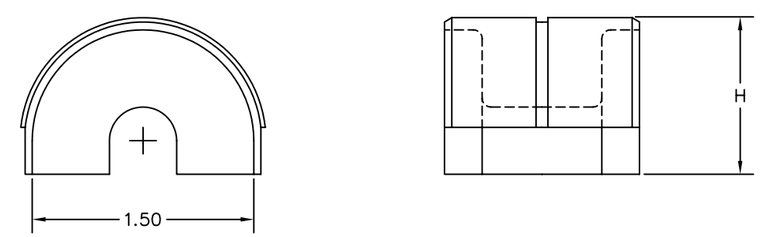

VIEW 'B'

NOTES:

1. TO BE USED WITH Y35P3 INDENTOR ADAPTOR AND Y34PR INDENTOR.
2. SEE 'G' DIM. DIAGRAM AND COLUMN FOR REQUIRED 'G' DIM. RANGES FOR NEST, ADAPTOR & INDENTOR ASSEMBLY FOR USE IN 12 OR 15 TON HYPRESS.™ VALUES SHOWN IN 'G' DIM. COLUMN ARE FOR THE SPECIFIC DIE COMBINATIONS SHOWN ONLY. (SEE NOTES 1 & 2).
3. U–D–2 DIES SHOWN ARE FOR U–D–2 NEST Y35P3 ADAPTOR/Y34PR5 INDENTOR.

TO ORDER BURNDY® PRODUCTS CALL

UNITED STATES:
1–800–346–4175 (LONDONDERRY, NH)

CANADA:
1–800–361–6975 (QUEBEC)
1–800–387–6487 (ALL OTHER PROVINCES)

FOR PRODUCT INFO: http://www.burndy.com

NEST DIES, Y35

ITEM NO: N/A

CAT NO: U––D– – (TABLE)

SCALE:	2/1	
DRAWN BY:	P LAPONIUS	10/9/03
CHECKER:	J HALL	10/23/03
DSN APPVL:	J HALL	10/23/03
MFG APPVL:	––	––
QC APPVL:	C ACKERMAN	10/23/03
MKT APPVL:	D HAMILTON	10/23/03
PROD FAM:	––	
PROJECT #:	––	
DOCUMENT TYPE:	Sales	
REL LEVEL:	AutoCAD	

SIZE: D

BURNDY

DRAWING NO: 10035172

REV: B

SHEET 1 OF 1

Downloaded from Arrow.com.