TEC2401-12-074xA

AC/DC-DC CRPS Front-End Power Supply

TEC2401-12-074xA is a 2400 W Common Redundant Power Supply (CRPS) power supply that converts standard AC mains power or High Voltage DC bus voltages (HVDC) into a main output of 12 VDC for powering systems using distributed power architectures.

The power supply is hot-swappable and supports N+1 redundant architecture. The high-power density helps to improve the overall system efficiency and enhance system reliability. The full digital control facilitates remote set-up, monitoring and control.

TEC2401-12-074xA offers multiple protections including overvoltage, overtemperature, overcurrent, overpower & short circuit protection.

This power supply meets international safety standards and displays the CE-Mark for the European Low Voltage Directive (LVD).

Key Features & Benefits

- 80 PLUS Titanium Efficiency
- Input Voltage Range 90 – 140 / 180 - 264 VAC; 180 – 300 VDC
- Nominal Output Voltage 12.2 VDC
- Standby Output 12 V_{SB} (2.1 A)
- Output Power up to 2400 W
- Intel Standard CRPS Form Factor
- Dimensions: 185 x 73.5 x 40 mm (7.28 x 2.89 x 1.57 in)
- High Power Density
- UL/CSA 62368-1, EN/IEC 62368-1 Certified (Pending Approval)
- Supports N+1 Redundancy, SMART_ON Redundancy, Internal ORing
- Black Box Recorder, Bootloader
- Clockwise and Counter-Clockwise Fan Rotation
- Supports Power Management Bus Communication Protocol

Applications

- Networking Switches
- Servers & Routers
- Telecommunications

Please read our datasheet & drawing disclaimer here.

Downloaded from Arrow.com.

1 ORDERING INFORMATION

TEC	2401	-	12	-	074	x	A
Product Family	**Power Level**	**Dash**	**V1 Output**	**Dash**	**Width**	**Airflow**	**Input**
TEC Front-Ends	2400 W		12 V		73.5 mm	N: Normal R: Reverse	A: AC

2 INPUT

PARAMETER	DESCRIPTION / CONDITION	MIN	NOM	MAX	UNIT
Input Voltage Ranges*	Low Voltage AC Range (1000 W)	90	100-127	140	V_{RMS}
	Low Voltage Start-up		85 ± 5		VAC
	Low Voltage Power Off		75 ± 5		VAC
	High Voltage AC Range (2400 W)	180	200-240	264	V_{RMS}
	High Voltage Start-up		175 ± 5		
	High Voltage Power Off		165 ± 5		
	HVDC (240 V)	180	240	300	VDC
	Start-up		170 ± 5		VDC
	Power Off		160 ± 5		VDC
AC Line Inrush Current				50	A_{pk}
Input Frequency		47	50/60	63	Hz
Power Factor	230 VAC and 50 Hz, 10% load	0.90			
	230 VAC and 50 Hz, 20% load	0.96			
	230 VAC and 50 Hz, 50% load	0.98			
	230 VAC and 50 Hz, 100% load	0.99			
Current iTHD (Total Harmonic Distortion)	200 / 240 VAC and 50/60 Hz, ≥ 10% load			20	%
	200 / 240 VAC and 50/60 Hz, > 20% & < 30 % load			15	
	200 / 240 VAC and 50/60 Hz, ≥ 30 % load			10	
	200 / 240 VAC and 50/60 Hz, ≥ 50% load			8	
	200 / 240 VAC and 50/60 Hz, 100% load			5	
Efficiency	230 VAC / 60 Hz, 10% load	90			%
	230 VAC / 60 Hz, 20% load	94			%
	230 VAC / 60 Hz, 50% load	96			%
	230 VAC / 60 Hz, 100% load	93			%
Hold-up Time	@ 70% of max. loading	6			ms
$12V_{SB}$ Hold-up Time	@ 100% load	70			ms
AC Line Sag	0 to 1/2 AC cycle (nom AC voltage ranges, 50/60 Hz) No loss of function or performance. (0%-60%load)		95		%
	> 1 AC cycle (nom AC voltage ranges, 50/60 Hz) Loss of function acceptable, self-recoverable	30			%
AC Line Surge	Continuous (nom AC voltage ranges, 50/60 Hz) No loss of function or performance		10		%
	0 to 1/2 AC cycle (mid-point of nom VAC ranges, 50/60 Hz) No loss of function or performance		30		%
AC Line Isolation	Primary to secondary; reinforced insulation (IEC 60950)	3000 4242			VAC VDC

* The Brown IN/OUT Hysteresis min is 5 VAC.

1. Maximum input current at high input voltage range is measured at 200 VAC, at max load 2400 W (15 Arms)
2. AC Brown-in/out loading is 80%load; (low line & high line)

Downloaded from Arrow.com.

3 OUTPUT

PARAMETER	DESCRIPTION / CONDITION	MIN	NOM	MAX	UNIT
Output Voltage	Output voltage adjusted to 12.2 VDC ± 0.05 VDC @ 50% load		12.2		VDC
Voltage Regulation Limits	± 6 %	+11.47	+12.2	+12.93	V_{RMS}
Max Continuous Output Power	Low line: 1000 W			2400	W
Output Current	@ 110 VAC @ 220 VAC	0		82 195	A
Load Regulation			± 3		%
Line Regulation			± 1		%
Overshoot / Undershoot			5		%
Transient Load *	Δ Step Load Size, 50% of Load Max, 3300 µF			0.5	A/µs
Capacitive Loading		3300		20000	µF
Output Ripple & Noise	20 MHz BW			150	mVpp
+12 V_{SB} OUTPUT					
+12 V_{SB} Output Voltage			+12.2		V_{SB}
Voltage Regulation Limits	± 5 %	+11.59	+12.2	+12.81	V_{RMS}
+12 V_{SB} Output Current		0		2.1	A
Load Regulation			± 3		%
Line Regulation			± 1		%
Overshoot / Undershoot			5		%
Transient Load	Δ Step Load Size = 1 A, 1000 µF			0.5	A/µs
Capacitive Loading		100		3100	µF
Output Ripple & Noise	10 Hz to 20 MHz BW			150	mVpp

* For dynamic condition +12 V min loading is 1 A

3.1 CRPS LOAD REQUIREMENTS

Output	Input voltage (VAC)	Min. (A)	Max. Continuous (A)	CLST Peak 20 sec duration (A)	Pmax. app Peak 10 msec duration (A)
12V main	200 – 240	0.0	PSU rating (195 A)	Rated + 6 A	Rated + 30 A
12V main	100 – 127	0.0	PSU rating (82 A)	Rated + 6 A	Rated + 30 A
12Vstby [1]	100 – 240	0.0	2.1	2.4	NA

[1] The length of time 20 sec peak power can be supported, based on thermal sensor and assertion of the SMBAlert# signal. Minimum peak power duration is 20 seconds without asserting the SMBAlert# signal at maximum operating temperature.

© 2023 Bel Fuse Inc.

Downloaded from Arrow.com.

3.2 TIMING REQUIREMENTS

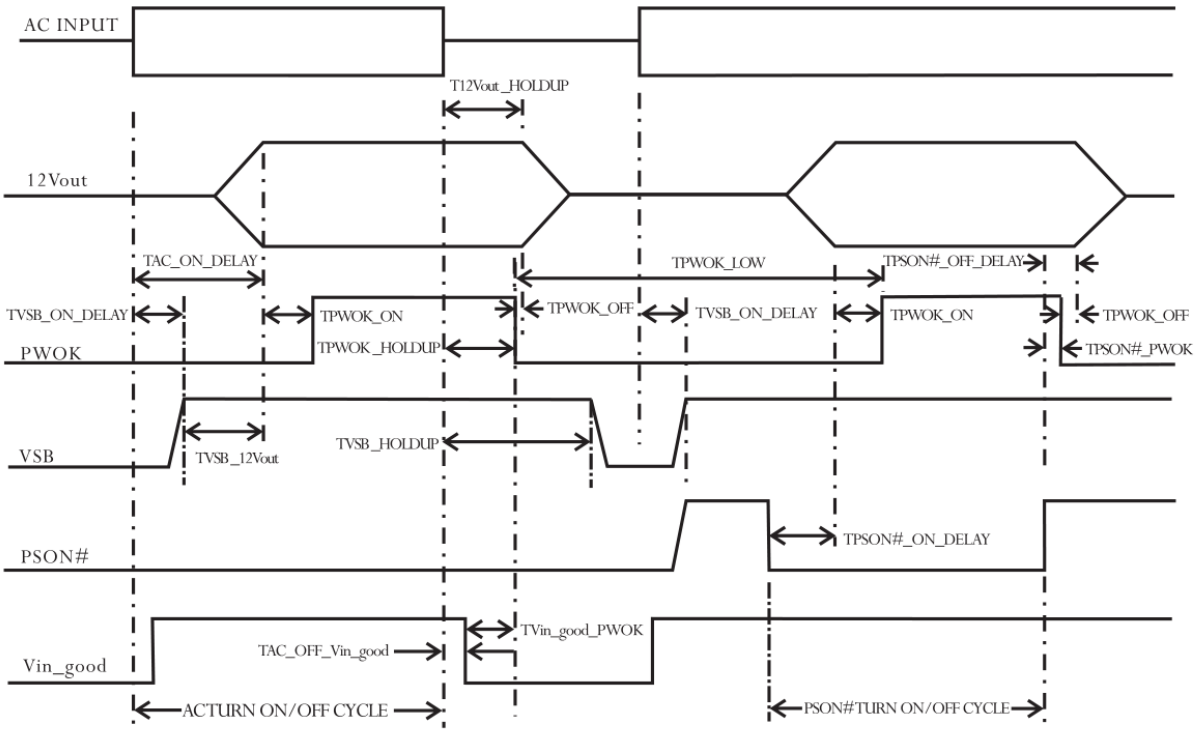

Figure 1. Signal Timing Sequence

Timing Values for Signal Timing Sequence:

ITEM	DESCRIPTION	MIN	MAX	UNITS
$T_{AC_OFF_Vin_good}$	The time interval between AC Drop to zero to Vin_good signal gets asserted.		4	ms
$T_{Vin_good_PWOK}$	Vin_good shall be get asserted 1ms prior to PWOK during ac loss event.	1		ms
T_{VSB_RISE}	Standby voltage rise time for VSB.	1	25	ms
$T_{VSB_ON_DELAY}$	Delay from AC being applied to 12VSB being within regulation.		1500	ms
T_{12Vout_RISE}	Output voltage rises time for 12VOUT	1	70	ms
$T_{AC_ON_DELAY}$	Delay from AC being applied to all output voltages being within regulation.		2500	ms
T_{12Vout_HOLDUP}	Time 12V output voltage dropping to regulation after loss of AC at 70% load condition.	6		ms
T_{PWOK_HOLDUP}	Delay from loss of AC to desertion of PWOK at 70% load condition.	5		ms
$T_{PSON\#_ON_DELAY}$	Delay from PSON# active to output voltages within regulation limits.	5	400	ms
$T_{PSON\#_PWOK}$	Delay from PSON# deactivate to PWOK being deserted.		5	ms
T_{PWOK_ON}	Delay from output voltages within regulation limits to PWOK asserted at turn on.	100	500	ms
T_{PWOK_OFF}	Delay from PWOK de-asserted to +12V dropping out of regulation limits.	1		ms
T_{PWOK_LOW}	Duration of PWOK being in the deserted state during an off/on cycle using AC or the PSON# signal.	100		ms
T_{VSB_12Vout}	Delay from 12 VSB being in regulation to O/Ps being in regulation at AC turn on.	50	2000	ms
T_{VSB_HOLDUP}	Time the +12VSB output voltage stays within regulation after loss of AC.	70		ms

Downloaded from Arrow.com.

4 PROTECTION

Protection circuits inside the power supply cause only the power supply's main outputs to shutdown. If the power supply latches off due to a protection circuit tripping, an AC cycle OFF for 15 sec and a PSON# cycle HIGH for 1 sec are able to reset the power supply.

4.1 OVER CURRENT PROTECTION (OCP)

The power supply shall have current limit to prevent the outputs from exceeding the values shown in table below. If the current limits are exceeded the power supply shall shutdown and latch off. The latch will be cleared by toggling the PSON# signal or by an AC power interruption. The power supply shall not be damaged from repeated power cycling in this condition. 12VSB will be auto-recovered after removing OCP limit.

		THRESHOLDS		TIMING	
PARAMETER	DESCRIPTION	MIN	MAX	MIN	MAX
OCP	Slow over current protection (shutdown and latch after MIN/MAX timing)	Rating + 10 A	Rating + 18 A	20 ms	200 ms
OCW	Slow over current warning (SMBAlert#)	Rating + 6 A	Rating + 10 A	10 ms	15 ms
OCPstby	Stby over current protection (shutdown, hiccup mode)	2.5 A	4.0 A	1 ms	100 ms

4.2 OVER VOLTAGE PROTECTION (OVP)

The power supply over voltage protection will be locally sensed. The power supply will shutdown and latch off after an over voltage condition occurs. This latch will be cleared by toggling the PSON# signal or by an AC power interruption. The values are measured at the output of the power supply's connectors. The voltage should never exceed the maximum levels when measured at the power connectors of the power supply connector during any single point of fail. The voltage should never trip any lower than the minimum levels when measured at the power connector. 12 V_{SB} will be auto-recovered after removing OVP limit.

PARAMETER	DESCRIPTION / CONDITION	MIN	NOM	MAX	UNIT
Over Voltage Protection (OVP)	+12 V Output	13.3	14	14.5	V
	+12 V_{SB} Output	13.3	14	14.5	V

4.3 OVER TEMPERATURE PROTECTION (OTP)

The power supply will be protected against over temperature conditions caused by loss of fan cooling or excessive ambient temperature. In an OTP condition the PSU will shutdown. When the power supply temperature drops to within specified limits, the power supply will restore power automatically, while the 12 V_{SB} remains always on. The OTP circuit must have built in margin such that the power supply will not oscillate on and off due to temperature recovering condition. The OTP trip level shall have a minimum of 5°C of ambient temperature margin.

4.4 SHORT CIRCUIT PROTECTION (SCP)

The power supply shuts down and latches off for shorting the main outputs. 12 V_{SB} is capable of being shorted indefinitely. The latch will be cleared by toggling the PSON# signal or by an AC power interruption. The power supply should not be damaged from repeated power cycling in this condition. 12 V_{SB} will be auto-recovered after removing SCP limit.

4.5 OVER POWER PROTECTION (OPP)

The power supply shall support over power protection (OPP) level low enough to protect the power supply running in this mode for repeated 1msec durations at a 1% duty cycle. The power supply shall be stable operating at any load point from rated power up to the OPP point.

CRPS-185 Load Requirement: OPP Threshold = (Imax + 49 A) +/-50 W
SMBAlert# shall always assert ahead of the OPP threshold being exceeded

© 2023 Bel Fuse Inc.

Downloaded from Arrow.com.

4.6 CLOSED LOOP SYSTEM THROTTLING (CLST)

The power supply will always assert the SMBAlert# signal whenever temperature-monitored component in the power supply reaches a warning threshold. Upon reduction of the load within 2msec after the SMBAlert# signal is asserted if the load is reduced to less than the power supply rating; the power supply will continue to operate and not shutdown.

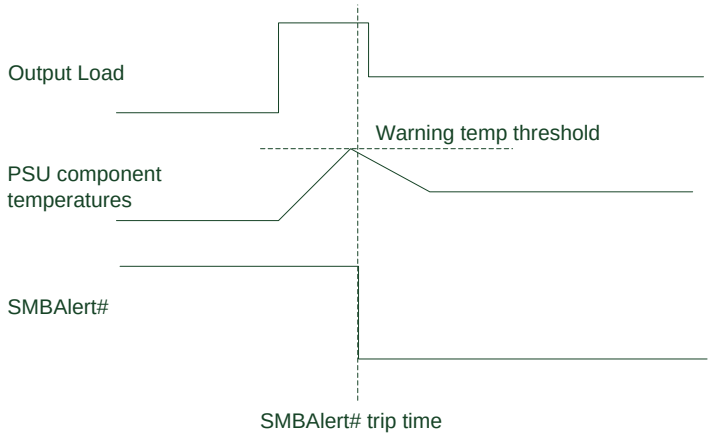

Figure 2. CLST Timing Requirements

4.7 SMART RIDE-THROUGH (SmaRT)

The power supply will assert the SMBAlert# signal < 4 msec after AC input voltage is lost to 0 VAC.

5 CONTROL

The following sections define the input and output signals from the power supply. Signals that can be defined as low true use the following convention: Signal# = low true.

5.1 DEVICE ADDRESS LOCATION (B19: A0; B20: A1)

Address Bit 0: A 10 kΩ pull-up resistor pulled to internal +3.3 V in the PSU.
Address Bit 1: A 10 kΩ pull-up resistor pulled to internal +3.3 V in the PSU.

LOCATIONS	PSU#1	PSU#2
PBD addressA1/A0	0/0	0/1
Power supply FRU device	A0h	A2h
Power supply PSMI device	B0h	B2h
Signal type	10k ohm pull up resistor from +3.3 Vdd device.	
A1 or A0 = low	A1 or A0 address bit = 0	
A1 or A0 = high	A1 or A0 address bit = 1	
	MIN	MAX
Logic level low voltage	0 V	0.4 V
Logic level high voltage	2.4 V	3.46 V

5.2 I2C BUS (S6: SCL; S5: SDA)

Each module shall provide SCL/SDA bus for EEPROM read/write of system. It's pull up from +3.3Vdd device by a 10K ohm resistor. System should have 1k~2k ohm pull high resistor on the SCL/SDA bus. SCL/SDA pin should be link together and closer. The SCL/SDA bus total capacitance must lower 100pF from system and PDB. The max I2C bus speed is 100 kHz and the mcu of PSU is slave device in I2C bus. The time interval of I2C command is 1ms.

Downloaded from Arrow.com.

5.3 SMBAlert# INDICATE (Pin A22: SMBAlert#)

This is an active low signal and indicates that the power supply is experiencing a problem that the user should investigate. This shall be asserted due to Critical events or Warning events. The signal shall activate in the case of critical component temperature reached a warning threshold, general failure, over-current, over-voltage, under-voltage, failed fan. This signal may also indicate the power supply is reaching its end of life or is operating in an environment exceeding the specified limits.

This signal is to be asserted in parallel with LED turning solid Amber or blink Amber.

SIGNAL TYPE (ACTIVE LOW)	OPEN COLLECTOR / DRAIN OUTPUT FROM POWER SUPPLY. PULL-UP TO 3.3 VSB LOCATED IN SYSTEM.	
Alert# = High	OK	
Alert# = Low	Power Alert to system	
	MIN	**MAX**
Logic level low voltage, Isink = 4 mA	0 V	0.4 V
Logic level high voltage, Isink = 50 uA		3.46 V
Sink current, Alert# = low		4 mA
Sink current, Alert# = high		50 µA

5.4 PSON# INPUT SIGNAL (PIN: A21: PSON#)

The PSON# signal is required to remotely turn on/off the power supply. PSON# is an active low signal that turns on the +12V power rail. When this signal is not pulled low by the system, or left open, the outputs (except the +12VSB) turn off. This signal is pulled to a standby voltage by a pull-up resistor internal to the power supply.

SIGNAL TYPE	ACCEPTS AN OPEN COLLECTOR/DRAIN INPUT FROM THE SYSTEM. PULL-UP TO 3.3VSB LOCATED IN POWER SUPPLY.	
PSON# = Low	ON	
PSON# = High or Open	OFF	
	MIN	**MAX**
Logic level low (power supply ON)	0 V	1.0 V
Logic level high (power supply OFF)	2.0 V	3.46 V
Source current, $V_{PSON\#}$ = low		4 mA
Power off delay: $T_{PSON\#_OFF_DELAY}$		5 ms
Power up delay: $T_{PSON\#_ON_DELAY}$	5 ms	400 ms
PWOK delay: $T_{PSON\#_PWOK}$		5 ms

5.5 PWOK OUTPUT SIGNAL (PIN A25: PWOK)

PWOK is a power OK signal and will be pulled HIGH by the power supply to indicate that all the outputs are within the regulation limits of the power supply. When any output voltage falls below regulation limits or when AC power has been removed for a sufficiently long time so that power supply operation is no longer guaranteed, PWOK will be de-asserted to a LOW state. See Table: for a representation of the timing characteristics of PWOK. The start of the PWOK delay time shall be inhibited as long as any power supply output is in current limit.

SIGNAL TYPE	OPEN COLLECTOR/DRAIN OUTPUT FROM POWER SUPPLY. PULL-UP TO 3.3VSB LOCATED IN THE POWER SUPPLY.	
PWOK = High	Power OK	
PWOK = Low	Power Not OK	
	MIN	**MAX**
Logic level low voltage, Isink = 400 uA	0 V	0.4 V
Logic level high voltage, Isource = 200 uA	2.4 V	3.46 V
Sink current, PWOK = low		400 µA
Source current, PWOK = high		2 mA
PWOK delay: Tpwok_on	100 ms	500 ms
PWOK rise and fall time		100 µs

© 2023 Bel Fuse Inc.

Downloaded from Arrow.com.

5.6 SMART_ON CONTROL (PIN B22: ENABLE BY SYSTEM)

Before enabling SMART_ON function, make sure pin B22 (SMART_ON) on output golden finger of each PSU is connected together.

5.7 PRESENT# (Pin B24)

This signal is an active low type signal and is connected to the power supply's output ground internally. The mating pin of this signal in system side should have a pull-up resistor which limit the max. current 4mA to go through from this signal pin to the power supply. A Low state on this signal indicates the PSU is physically presents.

5.8 Vin_good (Pin B25)

This signal is an output to indicate AC power is existence and is within operation range.It should act from high to low level within 2ms only for Vin drops out to zero and input voltage brown-out events.The 4ms timing is defined as Vin=0 to Vin_good signal low level.

SIGNAL TYPE	PULL-UP 2kohm TO INTERNAL 3.3V LOCATED IN POWER SUPPLY.	
Vin_good = High	Input voltage is in operating range	
Vin_good = Low	Input voltage is out of operating range	
	MIN	MAX
Logic level low, Isink = 4 mA	0 V	0.4 V
Logic level high, Isource = 50 µA	2.0 V	3.46 V
Sink current, Vin_good = low		4 mA
Source current, Vin_good = high		50 µA
Vin_good rise and fall time		400 µs

Table 1. Vin_good Signal Characteristics

Downloaded from Arrow.com.

6 FRU REQUIREMENTS

6.1 OVERVIEW

The Power Management Bus features included in this specification are requirements for AC/DC golden box power supply for use in server systems. This specification is based on the Power Management Bus specifications parts I and II, revision 1.2.

6.2 RELATED DOCUMENTS

Power Management Bus Power System Management Protocol Specification Part I – General Requirements, Transport and Electrical Interface; Revision 1.2.

Power Management Bus Power System Management Protocol Specification Part II – Command Language; Revision 1.2. SMBus 2.0.

6.3 HARDWARE CONNECTING

The device in the power supply shall be compatible with both SMBus 2.0 'high power' specification for I2C Vdd based power and drive (for Vdd = 3.3 V). This bus shall operate at 3.3 V.
The circuits inside the power supply shall derive their power from the standby output. For redundant power supplies the device(s) shall be powered from the system side of the or'ing device. The Power Management Bus device shall be on whenever AC power is applied to the power supply or a parallel redundant power supply in the system. Only weak pull-up resistors shall be on SCL or SDA inside the power supply. The main pull-up resistors are provided by the system and may be connected to 3.3 Vsb. For the system design, the main pull-ups shall be located external to the power supply and derive their power from the standby rail.

6.4 DATA SPEED

The POWER MANAGEMENT BUS device in the power supply shall operate at the full 100 kbps SMBus speed and avoid using clock stretching that can slow down the bus. For example, the power supply can clock stretch while parsing a command or a power supply servicing multiple internal interrupts or NACK may require some use of clock stretching.
The Power Management Bus device shall support SMBus cumulative clock low extend time (Tlow:sext) if < 25msec. This requires the device to extend the clock time no more than 25msec between START and STOP for any given message.

6.5 BUS ERROR

The Power Management Bus device shall support SMBus clock-low timeout (Ttimeout). This capability requires the device to abort any transaction and drop off the bus if it detects the clock being held low for >25ms and be able to respond to new transactions 10ms later.
The device must recognize SMBus START and STOP conditions on ANY clock interval. (These are requirements of the SMBus specifications but are often missed in first-time hardware designs.) The device must not hang due to 'runt clocks', 'runt data', or other out-of-spec bus timing. This is defined as signals, logic-level glitches, setup, or hold times that are shorter than the minimums specified by the SMBus specification. The device is not required to operate normally but must return to normal operation once 'in spec' clock and data timing is again received. Note if the device 'misses' a clock from the master due to noise or other bus errors, the device must continue to accept 'in spec' clocks and re-synch with the master on the next START or STOP condition.

6.6 FRU DATA FORMAT

For identification of the power supply an internal 256x8 bit EEPROM with Power Management Bus interface is used. The information in the EEPROM follows the IPMI (Platform Management FRU Information Storage Definition) guidelines Document Revision 1.1 from November 15, 1999.

© 2023 Bel Fuse Inc.

Downloaded from Arrow.com.

6.7 COMMUNICATION ADDRESS

Four pins will be allocated for the FRU and Power Management Bus information on the Power Supply connector. One pin is the serial clock (SCL). The second pin is used for serial data (SDA). Two pins are for address lines

A0-A1 to indicate to the power supply's EEPROM and MCU. which position the power supply is located in the system. The SCL and SDA signals are pulled up by system, the address lines are also pulled up by system.

A1 LOGICAL VOLTAGE	A0 LOGICAL VOLTAGE	PSU ADDRESS	FRU ADDRESS
0	0	0xB0	0xA0
0	1	0xB2	0xA2
1	0	0xB4	0xA4
1	1	0xB6	0xA6

7 POWER MANAGEMENT BUS

Refer to the Power Management Bus application profile for systems for requirements.
Note. Power Management Bus signal should be pull up to 3.3V only inside PSU.

7.1 POWER MANAGEMENT BUS COMMAND SET

The following table shows mandatory Power Management Bus commands to be supported by the PSU.

COMMAND CODE	COMMAND NAME	SMBUS TRANSACTION TYPE:		NUMBER OF DATA BYTES	COMMENT
		Writing Data	Reading Data		
00h	PAGE	Write Byte	Read Byte	1	
01h	OPERATION	Write Byte	Read Byte	1	0x80 ON; 0x00 OFF Default: 0x80
02h	ON_OFF_CONFIG	Write Byte	Read Byte	1	
03h	CLEAR_FAULTS	Send Byte	N/A	0	
05h	PAGE_PLUS_WRITE	Block Write	N/A	Variable	
06h	PAGE_PLUS_READ	N/A	Block Write – Block Read	Variable	
19h	CAPABILITY	N/A	Read Byte	1	0xB0
1Ah	QUERY	N/A	Block Write – Block Read	1	
1Bh	SMBALERT_MASK	Write Word	Block Write – Block Read	2	
20h	VOUT_MODE		Read Byte	1	0x17 (n=-9)
21h	VOUT_COMMAND	Write Word	Read Word	2	
30h	COEFFICIENTS	N/A	Block Write – Block Read	5	Use for Ein/Eout
31h	POUT_MAX	N/A	Read Word	2	
3Ah	FAN_CONFIG_1_2	Write Byte	Read Byte	1	Default is Duty
3Bh	FAN_COMMAND_1	Write Word	Read Word	2	
4Ah	IOUT_OC_WARN_LIMIT		Read Word	2	
51h	OT_WARN_LIMIT		Read Word	2	
5Dh	IIN_OC_WARN_LIMIT		Read Word	2	
6Ah	POUT_OP_WARN_LIMIT		Read Word	2	
6Bh	PIN_OP_WARN_LIMIT		Read Word	2	
78h	STATUS_BYTE	Write Byte	Read Byte	1	
Bit 6	OFF				
Bit 5	VOUT_OV_FAULT				
Bit 4	IOUT_OC				
Bit 3	VIN_UV				
Bit 2	TEMPERATURE				
Bit 1	CML				

Downloaded from Arrow.com.

Bit 0	NON OF THE ABOVE				
79h	STATUS_WORD	Write Word	Read Word	2	
Bit 7(H)	VOUT				
Bit 6	IOUT/POUT				
Bit 5	INPUT				
Bit 3	POWER_GOOD#				
Bit 2	FANS				
Bit 6(L)	OFF				
Bit 5	VOUT_OV_FAULT				
Bit 4	IOUT_OC_FAULT				
Bit 3	VIN_UV_FAULT				
Bit 2	TEMPERATURE				
Bit 1	CML				
Bit 0	NON OF THE ABOVE				
7Ah	STATUS_VOUT	Write Byte	Read Byte	1	
Bit 7	VOUT_OV_FAULT				
Bit 4	VOUT_UV_FAULT				
7Bh	STATUS_IOUT	Write Byte	Read Byte	1	
Bit 7	Iout OC fault				
Bit 5	Iout OC warning				
Bit 1	Pout OP fault				
Bit 0	Pout OP warning				
7Ch	STATUS_INPUT	Write Byte	Read Byte	1	
Bit 5	Vin UV warning				
Bit 4	Vin UV fault				
Bit 3	Unit off for insufficient input				
Bit 1	Iin over current warning				
Bit 0	Pin over power warning				
7Dh	STATUS_TEMPERATURE	Write Byte	Read Byte	1	
Bit 7	OT fault				
Bit 6	OT warning				
7Eh	STATUS_CML	Write Byte	Read Byte	1	
Bit 7	Invalid COMMAND				
Bit 6	Invalid DATA				
Bit 5	TEC Failed				
81h	STATUS_FANS_1_2	Write Byte	Read Byte	1	
Bit 7	Fan 1 fault				
Bit 5	Fan 1 warning				
Bit 3	Fan1 speed overridden				
86h	READ_EIN	N/A	Block Read	6	DIRECT Data Format
87h	READ_EOUT	N/A	Block Read	6	DIRECT Data Format
88h	READ_VIN	N/A	Read Word	2	Linear
89h	READ_IIN	N/A	Read Word	2	Linear
8Bh	READ_VOUT	N/A	Read Word	2	Linear16
8Ch	READ_IOUT	N/A	Read Word	2	Linear
8Dh	READ_TEMPERATURE_1	N/A	Read Word	2	Ambient
8Eh	READ_TEMPERATURE_2	N/A	Read Word	2	SR Hotspot
8Fh	READ_TEMPERATURE_3	N/A	Read Word	2	PFC Hotspot
90h	READ_FAN_SPEED_1	N/A	Read Word	2	In RPM
96h	READ_POUT	N/A	Read Word	2	Linear
97h	READ_PIN	N/A	Read Word	2	Linear
98h	POWER MANAGEMENT BUS_REVISION	N/A	Read Byte	1	1.2
99h	MFR_ID	Block Write	Block Read	Variable (8)	"bel"

© 2023 Bel Fuse Inc.

Downloaded from Arrow.com.

9Ah	MFR_MODEL	Block Write	Block Read	Variable (16)	"TEC2401-12-074NA" "TEC2401-12-074RA"
9Bh	MFR_REVISION	Block Write	Block Read	Variable (3)	"VXX"
9Ch	MFR_LOCATION	Block Write	Block Read	Variable (8)	"DONGGUAN"
9Dh	MFR_DATE	Block Write	Block Read	Variable (8)	"YYYYMMDD"
9Eh	MFR_SERIAL	Block Write	Block Read	Variable (14)	Serial Number
9Fh	APP_PROFILE_SUPPORT	N/A	Block Read	Variable (2)	Power Management Bus 1.2
A0h	MFR_VIN_MIN	N/A	Read Word	2	90V
A1h	MFR_VIN_MAX	N/A	Read Word	2	264V
A2h	MFR_IIN_MAX	N/A	Read Word	2	
A3h	MFR_PIN_MAX	N/A	Read Word	2	
A4h	MFR_VOUT_MIN	N/A	Read Word	2	11.47V
A5h	MFR_VOUT_MAX	N/A	Read Word	2	12.93V
A6h	MFR_IOUT_MAX	N/A	Read Word	2	
A7h	MFR_POUT_MAX	N/A	Read Word	2	
A8h	MFR_TAMBIENT_MAX	N/A	Read Word	2	
A9h	MFR_TAMBIENT_MIN	N/A	Read Word	2	
AAh	MFR_EFFICIENCY_LL	N/A	Block Read	14	At 20%/50%/100%
ABh	MFR_EFFICIENCY_HL	N/A	Block Read	14	At 20%/50%/100%
B0h	POWER MANAGEMENT BUS_MFR_ CALIBRATION_0xB0	Block Write	Block Read	Variable	
C0h	MFR_MAX_TEMP_1	N/A	Read Word	2	
C1h	MFR_MAX_TEMP_2	N/A	Read Word	2	
C2h	MFR_MAX_TEMP_3	N/A	Read Word	2	
D0h	MFR_SMART_ON_ REDUNDANCY_CONFIG	Write Byte	Read Byte	1	
D4h	MFR_HW_COMPATIBILITY	N/A	Read Word	2	
D5h	MFR_FWUPLOAD_CAPABILITY	N/A	Read Byte	1	
D6h	MFR_FWUPLOAD_MODE	Write Byte	Read Byte	1	
D7h	MFR_FWUPLOAD	Block Write	N/A		
D8h	MFR_FWUPLOAD_STATUS	N/A	Read Word	21	
D9h	MFR_FW_REVISION	N/A	Block Read	3	
DCh	MFR_BLACK_BOX	N/A	Block Read	237	
DDh	MFR_REAL_TIME	Block Write	Block Read	4	
DEh	MFR_SYSTEM_BLACK_BOX	Block Write	Block Read	40	
DFh	MFR_BLACKBOX_CONFIG	Write Byte	Read Byte	1	
E0h	MFR_CLEAR_BLACKBOX	Send Byte	N/A	1	

Table 2. Supported Power Management Bus Command

Note: Write protocol must include PEC (Packet Error Checking).

Downloaded from Arrow.com.

7.2 STATUS COMMANDS

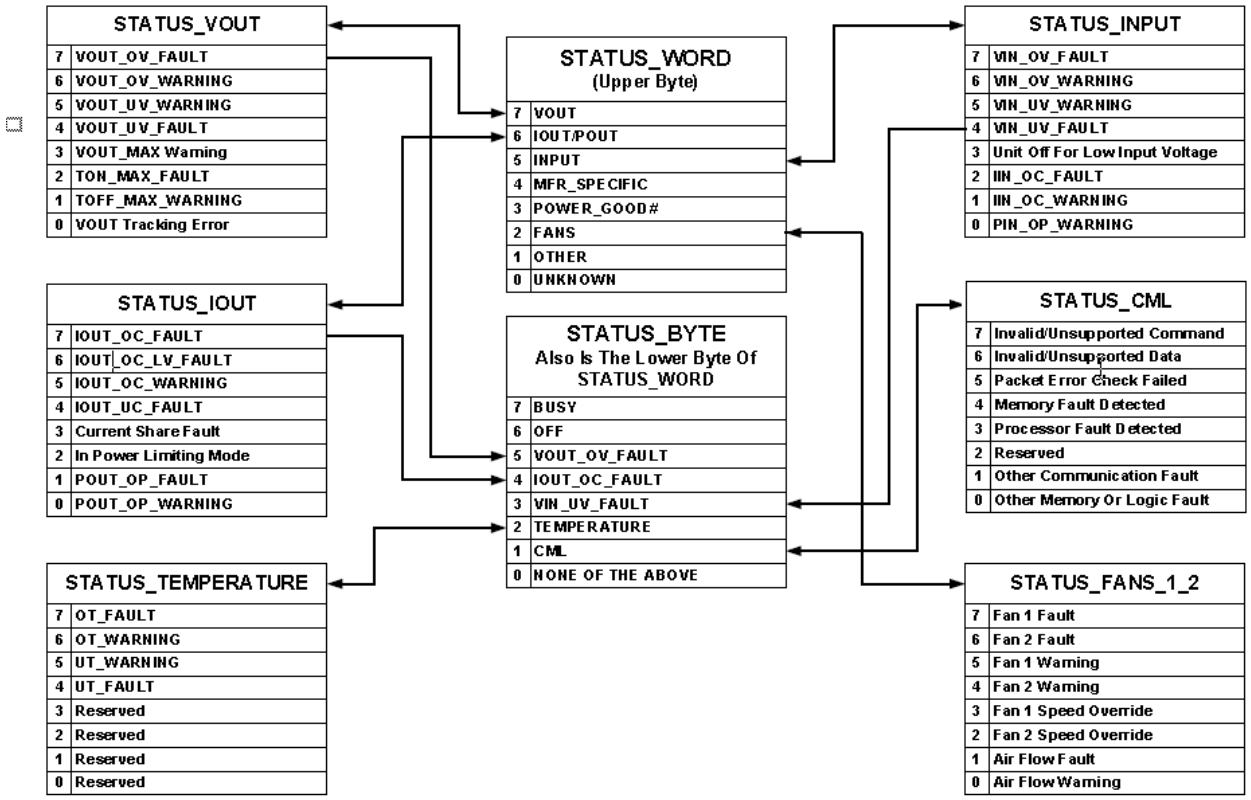

Figure 3. Summary of The Status Registers

The following Power Management Bus STATUS commands shall be supported. All STATUS commands stated in Table 3 Supporting PAGE instances shall support the PAGE_PLUS_WRITE and PAGE_PLUS_READ commands since they are used by both the BMC and ME. The BMC and ME refer to the two instances of the commands accessed via the PAGE_PLUS_WRITE and PAGE_ PLUS_READ commands. The status bits shall assert whenever the event driving the status bit is present. Once a bit is asserted it shall stay asserted until cleared

The STATUS commands that are supported with the PAGE_PLUS_READ and PAGE_PLUS_W RITE commands shall still support direct access of the base STATUS_XXX commands using the read word, write word, read byte, and write byte protocols.

STATUS_FAN_1_2 command is only accessed by the system BMC. It uses the standard read byte protocol to read status and write byte protocol to clear bits.

The STATUS events are also used to control the SMBAlert# signal. The new SMBALERT_MASK command is used to define which status event control the SMBAlert# signal. Default values for these mask bits are shown in the table below.

© 2023 Bel Fuse Inc.

Downloaded from Arrow.com.

POWER MANAGEMENT BUS COMMAND	BIT LOCATION	PSU STATE WHEN BIT IS ASSERTED ('1')	INSTANCES NO PAGE'ING2 PAGE 00H = BMC PAGE 01H = ME	SMBALERT_MASK DEFAULTS FOR EACH OF THE THREE INSTANCES (NO PAGE, PAGE 00H, PAGE 01H) 0 = CAUSES ASSERTION OF SMBAlert# 1 = DOES NOT CAUSE ASSERTION OF SMBAlert#
STATUS_WORD			No PAGE, 00h, 01h	
OFF	6 (lower)	OFF		NA
IOUT_OC_FAULT	4 (lower)	Refer to STATUS_IOUT		NA
VIN_UV_FAULT	3 (lower)	Refer to STATUS_INPUT		NA
TEMPERATURE	2 (lower)	Refer to STATUS_TEMPERATURE		NA
CML	1 (lower)	ON		NA
VOUT	7 (upper)	Refer to STATUS_VOUT		NA
IOUT/POUT	6 (upper)	Refer to STATUS_IOUT		NA
INPUT	5 (upper)	Refer to STATUS_INPUT		NA
FANS	2 (upper)	Refer to STATUS_FANS		NA
STATUS_VOUT			No PAGE'ing	
VOUT_OV_FAULT	7	OFF		1, 1, 1
VOUT_UV_FAULT	4	OFF		1, 1, 1
STATUS_IOUT			No PAGE'ing, 00h,01h	
IOUT_OC_FAULT	7	OFF		1, 1, 1
IOUT_OC_WARNING	5	ON		1, 1, 0
POUT_OP_FAULT	1	OFF		1, 1, 1
POUT_OP_WARNING	0	ON		1, 1, 1
STATUS_INPUT			No PAGE'ing, 00h,01h	
VIN_UV_WARNING	5	ON		1, 1, 1
VIN_UV_FAULT	4	OFF		1, 1, 0
Unit off for low input voltage	3	OFF		1, 1, 1
IIN_OC_WARNING	1	ON		1, 1, 1
PIN_OP_WARNING	0	ON		1, 1, 1
STATUS_TEMPERATURE			No PAGE'ing, 00h,01h	
OT_FAULT	7	OFF		1, 1, 1
OT_WARNING	6	ON		1, 1, 0
STATUS_FANS_1_2			No PAGE'ing	
Fan 1 fault3	7	OFF		1, 1, 1
Fan 1 warning3	5	ON		1, 1, 1

Table 3. Power Management Bus STATUS Commands Summary

1. The Vin Fault bit in STATUS_INPUT shall get asserted if the input power has dropped below the PSU's operating range for any duration of time; even if the PSU continues to operate normally through a momentary input dropout event.
2. 'No PAGE' is the standard STATUS_ commands accessed directly without using the PAGE_PLUS commands.
3. All fans in the PSU shall be OR'ed into a single fan status bit for fault and warning conditions.

Downloaded from Arrow.com.

7.3 POWER MANAGEMENT BUS TEMPERATURE READ COMMANDS

The following temperature read commands as documented by the Power Management Bus specification Part II version 1.2 should be supported.
READ_TEMPERATURE_1(8Dh), should provide the PSU inlet temperature.
READ_TEMPERATURE_2(8Eh), should provide the temperature of the SR heat sink in the PSU.
READ_TEMPERATURE_3(8Fh), should provide the temperature of the PFC heat sink in the PSU.

7.4 PAGE (00h)

Setting a PAGE value of FFh is used to clear all status bits in all PAGEs with the CLEAR_FAULT command.

7.5 OPERATION (01h)

The OPERTION command is used to configure the operational state of the converter, in conjunction with input from the CONTROL pin. The OPERATION command is used to turn the Power Management Bus device output on and off.
Bit [7] controls whether the Power Management Bus device output is on or off.
If Bit [7] is cleared (equals 0) then the output is off. If Bit [7] is set (equals 1), then the output is on.

7.6 ON_OFF_CONFIG (02h)

The ON_OFF_CONFIG command configures the combination of CONTROL pin input and serial bus commands needed to turn the unit on and off. This includes how the unit responds when power is applied.
The default response for any Power Management Bus device is specified by the device manufacturer. The default value is 0x1D.

X = don't care
HW = turn-on/off by control pin
HI = control pin active high turn-on power
LO = control pin active low turn-on power
SW = turn-on/off by operation command.

SETTING TYPE	BIT 7~5	BIT 4	BIT 3	BIT 2	BIT 1	BIT 0	DATA VALUE	DESCRIPTION	SUPPORTED
1	0	0	X	X	X	1	0x01	If AC ok, turn-on	YES
2	0	1	0	1	0	1	0x15	HW + LO	YES
3	0	1	1	0	X	1	0x19	SW	YES
4	0	1	1	1	0	1	0x1D	HW + LO + SW	YES

Table 4. ON_OFF_CONFIG Data Byte

© 2023 Bel Fuse Inc.

Downloaded from Arrow.com.

7.7 CLEAR_FAULTS COMMAND (03h)

The CLEAR_FAULTS command is used to clear any fault bits that have been set. This command clears all bits in all status registers simultaneously. At the same time, the device negates (clears, releases) its SMBAlert# signal output if the device is asserting the SMBAlert# signal.

7.8 PAGE_PLUS_WRITE / PAGE_PLUS_READ COMMANDS (05h/06h)

The new PAGE_PLUS_WRITE and PAGE_PLUS_READ commands are used with the STATUS_WORD, STATUS_INPUT, STATUS_TEMPERATURE, STATUS_IOUT, STATUS_VOUT, and STATUS_CML to create two instances of the same command. Each instance is set by the same events but cleared by their own master in the system. The instances at PAGE 00h are controlled by the system BMC and the instances at PAGE 01h are controlled by the system ME. Below are the protocols used to read and clear the STATUS_ commands using the PAGE_PLUS_WRITE and PAGE_PLUS_READ commands.

Reading STATUS_WORD
Block Write – Block Read Process Call with PEC

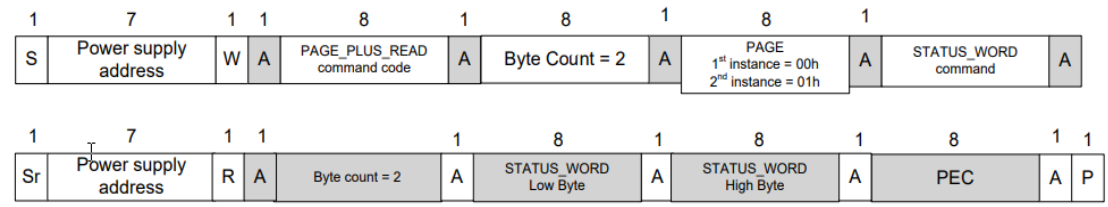

Reading STATUS_TEMPERATURE, STATUS_IOUT, STATUS_INPUT, STATUS_CML
Block Write – Block Read Process Call with PEC

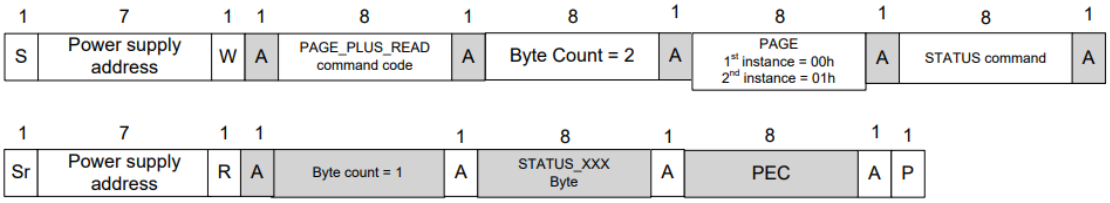

Figure 4. Reading STATUS commands with PAGE_PLUS_READ

Clearing STATUS commands (write '1' to clear a bit) STATUS_TEMPERATURE, STATUS_IOUT, STATUS_INPUT, STATUS_CML
Block Write with PEC

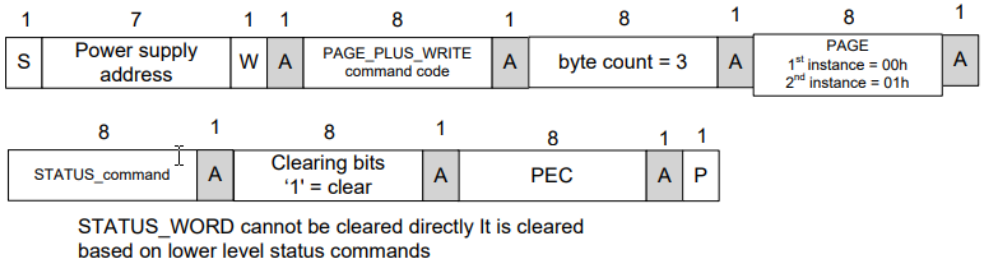

Figure 5. Clearing STATUS commands using PAGE_PLUS_WRITE

Downloaded from Arrow.com.

7.9 CAPABILITY (19h)

This command provides a way for a host system to determine some key capabilities of a Power Management Bus device. There is one data byte formatted as shown in table below. This command is read only.

BITS	DESCRIPTION	VALUE	MEANING
7	Packet Error Checking	0	Packet Error Checking not supported
		1	Packet Error Checking is supported
6:5	Maximum Bus Speed	00	Maximum supported bus speed is 100 kHz
		01	Maximum supported bus speed is 400 kHz
		10	Reserved
		11	Reserved
4	SMBAlert#	0	The device does not have a SMBAlert# pin and does not support the SMBus Alert Response protocol
		1	The device does have a SMBAlert# pin and does support the SMBus Alert Response protocol
3:0	Reserved	X	Reserved

Table 5. CAPABILITY COMMAND Data Byte Format

7.10 QUERY (1Ah)

The QUERY command is used to ask a Power Management Bus device if it supports a given command, and if so, what data formats it supports for that command. This command uses the Block Write-Block Read Process Call described in the SMBus specification.

BITS	VALUE	MEANING
7	1	Command is supported
	0	Command is not supported
6	1	Command is supported for write
	0	Command is not supported for write
5	1	Command is supported for read
	0	Command is not supported for read
4:2	000	Linear Data Format used
	001	16 bit signed number
	010	Reserved
	011	Direct Mode Format used
	100	8 bit unsigned number
	101	VID Mode Format used
	110	Manufacturer specific format used
	111	Command does not return numeric data. This is also used for commands that return blocks of data.
1:0	XX	Reserved for future use

Table 6. QUERY Command Returned Data Byte Format

If bit [7] is zero, then the rest of the bits are “don’t care”.

© 2023 Bel Fuse Inc.

Downloaded from Arrow.com.

7.11 SMBALERT_MASK (1Bh)

This allows the system to mask events from asserting the SMBAlert# signal and to read back this information from the PSU. SMBALERT_MASK command can be used with any of the supported STATUS events. The events are masked from asserting SMBAlert# by writing a '1' to the associated STATUS bits. The SMBALERT_MASK command is used in conjunction with the PAGE_PLUS command and STATUS_ commands. It is not supported for masking the Non-PAGE'd STATUS_ commands. Below are the protocols.

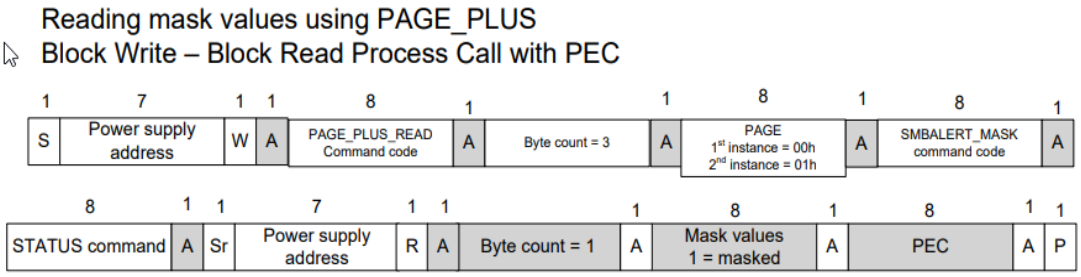

Figure 6. PAGE_PLUS_READ command.

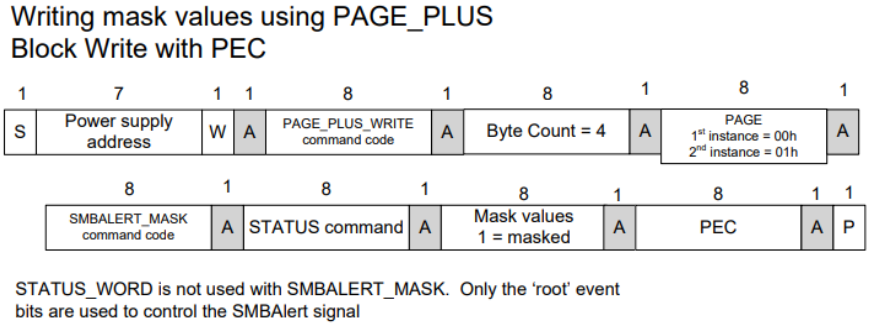

Figure 7. PAGE_PLUS_WRITE command.

7.12 COEFFICIENT (30h)

The power supply shall support the Power Management Bus COEFFICIENT command. The system shall use this to read the values of m, b, and R used to determine READ_EIN and READ_EOUT accumulated power values.

COMMAND	COEFFICIENTS SUPPORT	M	B	R
READ_EIN	Yes	01h	00h	00h
READ_EOUT	Yes	01h	00h	00h

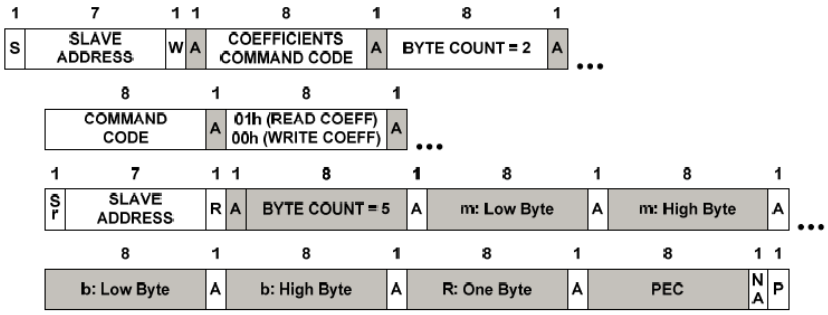

Figure 8. Retrieving Coefficients Using PEC

Downloaded from Arrow.com.

7.13 FAN_CONFIG_1_2 (3Ah)

The FAN_CONFIG_1_2 command is used to define the presence of a fan and the method it is controlled (by duty cycle or RPM).

The first of the configuration tells the Power Management Bus device whether or not a fan associated with position 1 (or 2) is installed. Any combination of fan installation is permitted.

The second part of the configuration tells the device whether the fan speed commands are in RPM or PWM duty cycle (in percent). These settings do not have to be the same for Fan 1 and Fan 2.

The third part of the configuration data tells the Power Management Bus device the number of tachometer pulses per revolution each fan provides. This information is needed for commanding and reporting fan speed in RPM. Two bits are provided for each fan. These settings do not have to be the same for Fan 1 and Fan 2. The binary values of these bits map to pulses per revolution as follows:

- 00b = 1 pulse per revolution,
- 01b = 2 pulses per revolution,
- 10b = 3 pulses per revolution,
- 11b = 4 pulses per revolution.

This command has one data byte formatted as follows:

BITS	VALUE	MEANING
7	1	Fan in position 1
6	0	Fan 1 commanded in Duty Cycle
	1	Fan 1 commanded in RPM
5:4	00b-11b	Fan 1 Tachometer Pulses Per Revolution
3	0	No fan in position 2
2	Not used	
1:0	Not used	

Table 7. FAN_CONFIG_1_2 Command

7.14 FAN_COMMAND_1 (3Bh)

The system may increase the power supplies fan speed through using the FAN_COMMAND_1 command. This command can only increase the power supplies fan speed; it cannot decrease the PSU fan speed below what the PSU minimum speed of the thermal requirement.

The default control mode of fan is duty (0 ~ 100%).

7.15 READ_FAN_SPEED_1 (90h)

The system will read the fan speed by using the READ_FAN_SPEED_1 command. This data shall return the fan speed in the Power Management Bus linear format.

7.16 POWER MANAGEMENT BUS_REVISION (98h)

This is a correction to the table in the Power Management Bus part II specification regarding the POWER MANAGEMENT BUS_REVISION command.

BITS [7:4]	PART I REVISION	BITS [3:0]	PART II REVISION
0000	1.0	0000	1.0
0001	1.1	0001	1.1
0010	1.2	0010	1.2
0011	1.3	0011	1.3

Table 8. POWER MANAGEMENT BUS_REVISION Command

© 2023 Bel Fuse Inc.

Downloaded from Arrow.com.

7.17 MFR-EFFIENCY_LL (AAh)

The MFR_EFFICIENCY_LL command sets or retrieves information about the efficiency of the device while operating at a low line condition. Not including the PEC byte, if used, and the byte count byte, there are fourteen data bytes as described below. The efficiency is specified at one input voltage and three data points consisting of output power and the efficiency at that output power. The three power ratings are typically referred as low, medium and high output power and are transmitted in that order. For example, the low, medium and high output power might correspond to 20%, 50% and 100% of the rated output power. The exact values of the output power are specified is left to the Power Management Bus device manufacturer. Each value (voltage, power or efficiency) is transmitted as two bytes in linear format.

BYTE NUMBER	BYTE ORDER	DESCRIPTION
0 1	Low Byte High Byte	The input voltage, in volts, at which the low line efficiency data is applicable. Note that byte 0 is the first data byte transmitted as part of the block transfer.
2 3	Low Byte High Byte	Power, in watts, at which the low power efficiency is specified
4 5	Low Byte High Byte	The efficiency, in percent, at the specified low power.
6 7	Low Byte High Byte	Power, in watts, at which the medium power efficiency is specified
8 9	Low Byte High Byte	The efficiency, in percent, at the specified medium power.
10 11	Low Byte High Byte	Power, in watts, at which the high power efficiency is specified
12	Low Byte	The efficiency, in percent, at the specified high power. Note that byte 13 is the last data byte transmitted as part of the block transfer.

Table 9. MFR_EFFICIENCY_LL

7.18 MFR-EFFIENCY_HL (ABh)

The MFR_EFFICIENCY_HL command sets or retrieves information about the efficiency of the device while operating at a high line condition. Not including the PEC byte, if used, and the byte count byte, there are fourteen data bytes as described below. The efficiency is specified at one input voltage and three data points consisting of output power and the efficiency at that output power. The three power ratings are typically referred as low, medium and high output power and are transmitted in that order. For example, the low, medium and high output power might correspond to 20%, 50% and 100% of the rated output power. The exact values of the output power is specified is left to the Power Management Bus device manufacturer. Each value (voltage, power or efficiency) is transmitted as two bytes in linear format.

BYTE NUMBER	BYTE ORDER	DESCRIPTION
0 1	Low Byte High Byte	The input voltage, in volts, at which the high line efficiency data is applicable. Note that byte 0 is the first data byte transmitted as part of the block transfer.
2 3	Low Byte High Byte	Power, in watts, at which the low power efficiency is specified
4 5	Low Byte High Byte	The efficiency, in percent, at the specified low power.
6 7	Low Byte High Byte	Power in watts, at which the medium power efficiency is specified
8 9	Low Byte High Byte	The efficiency, in percent, at the specified medium power.
10 11	Low Byte High Byte	Power, in watts, at which the high power efficiency is specified
12	Low Byte	The efficiency, in percentage, at the specified high power. Note that byte 13 is the last data byte transmitted as part of the block transfer.

Table 10. MFR_EFFICIENCY_HL

Downloaded from Arrow.com.

7.19 READ EIN (86h)

The new READ_EIN command is used to allow the system to apply its own input power filtering. This will allow the system to get faster input power data while preventing aliasing. The command returns an accumulated power value and an associated sample count of number of accumulated power values. This allows the system to calculate its own average power value each time the system polls the PSU.

	MIN	MAX	DESCRIPTION
Format	Power Management Bus Direct format m = 01h, R = 00h, b = 00h		Power Management Bus data format; refer to Power Management Bus specification for details.
Psample averaging period	4 AC cycles		Period instantaneous input power is averaged over to calculate Psample.
READ_EIN update period	80/66.7ms (50/60Hz)		Period at which the power accumulator and sample counter are updated
Range of System polling period	1 sec	100 ms	The PSU shall be polled over this range of rates while testing accuracy.

IMPORTANT:
The PSU READ_EIN update period MUST always be less than the system polling period. To make sure the PSU is compatible with all possible system polling periods; the PSU must update the READ_EIN power accumulator and sample counter at a period less than 100msec (required period is 4 AC cycles 80/67msec).

Table 11. READ_EIN Requirements Summary

7.20 READ EOUT (87h)

The new READ_EOUT command is used to allow the system to apply its own output power filtering. This will allow the system to get faster output power data while preventing aliasing. The command returns an accumulated power value and an associated sample count of number of accumulated power values. This allows the system to calculate its own average power value each time the system polls the PSU.

	MIN	MAX	DESCRIPTION
Format	Power Management Bus Direct format m = 01h, R = 00h, b = 00h		Power Management Bus data format; refer to Power Management Bus specification for details.
Psample averaging period	Nominal 50 ms		Period instantaneous input power is averaged over to calculate Psample.
Sampling period	Nominal 50 ms		Period at which the power accumulator and sample counter are updated
System polling rate	1 sample /s	10 samples /s	The PSU shall be polled over this range of rates while testing accuracy.

Table 12. READ_EOUT Requirements Summary

© 2023 Bel Fuse Inc.

Downloaded from Arrow.com.

7.21 READ_EIN & READ_EOUT FORMATS

The READ_EIN and READ_EOUT commands shall use the Power Management Bus direct format to report an accumulated power value and the sample count. The Power Management Bus coefficients m, R, and b shall be fixed values and the PSU shall report these values using the Power Management Bus COEFFICIENT command. The coefficient m shall be set to 01h, coefficient R shall be set to 00h, and coefficient b shall be set to 00h.

READ_EIN and READ_EOUT shall use the SMBus Block Read with PEC protocol in the below format.

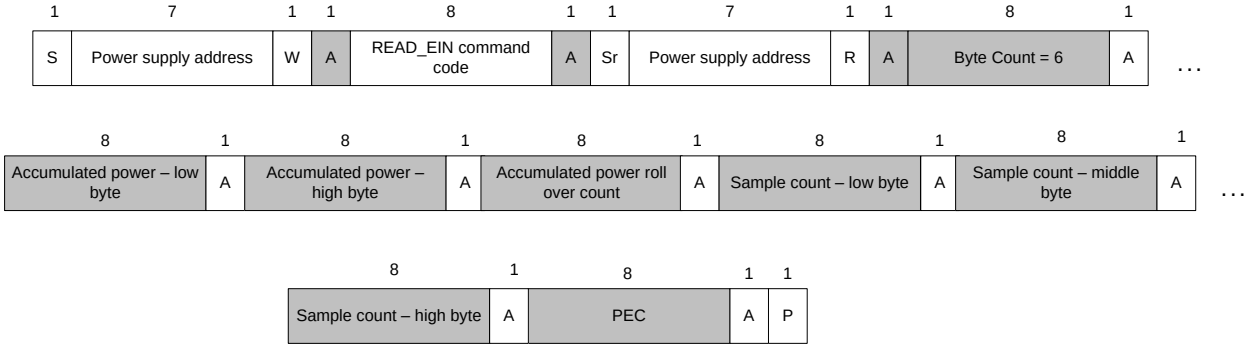

Figure 9. READ_EIN Command

The accumulated power data shall be the sum of input power values averaged over 4 AC cycles (or over 50ms for READ_EOUT). The value shall automatically roll-over when the 15 bit maximum value is reached (> 7FFFh). The sample count should increment 1 for each accumulated power value. The system shall calculate average power by dividing the accumulated power value by the sample count. The system must sample READ_EIN and READ_EOUT faster than the roll-over period to get an accurate power calculation. Below is a block diagram depicting the accumulator function in the PSU.

IMPORTANT NOTE:

When the PSU responds to the system requesting READ_EIN or READ_EOUT data; the data in the sample count must always alignment with the number of samples accumulated in the power accumulator. To achieve this power accumulator, power rollover counter, and sample counter shall be loaded into a READ_EIN and READ_EOUT register at the same time.

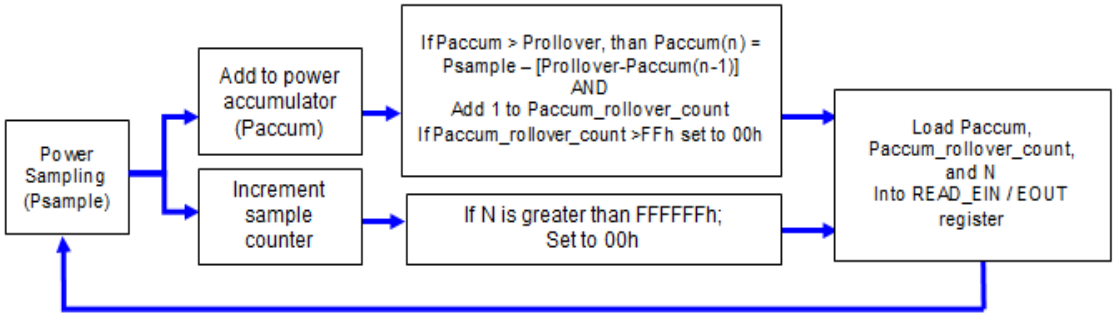

Figure 10. READ_EIN PSU Functional Diagram

VALUE	DESCRIPTION
Psample:	The sampled power value in linear or direct format
Paccum:	2 bytes in Power Management Bus linear or direct format. The accumulated power values made up of Psample(0) + Psample(1) + … + Psample(n)
N:	3 byte unsigned integer value. The number of accumulated power values summed in Paccum
Prollover:	The max value of Paccum before a rollover will occur
Paccum_rollover_count:	1 byte unsigned integer counting the number of times Paccum rolls over. Once this reaches FFh; it will automatically get reset to 00h

Downloaded from Arrow.com.

7.22 POWER SUPPLY ACCURACY

The following Power Management Bus commands shall be supported for the purpose of monitoring current, voltage, and power. All sensors shall continue providing real time data as long as the Power Management Bus device is powered. This means in standby mode the main output(s) of the PSU shall be zero amps and zero volts. Sensors shall meet requirements at nominal input voltage; maximum deviation for the ambient temperature is +/- 4°C.

	10%~20% of Max. Load	20%~50% of Max. Load	50%~100% of Max. Load
Pin/Ein	±10 W or ±5%	±3%	±3%
Iin	±0.08 A or ±5%	±3%	±3%
Iout	±1A or ±5%	±3%	±3%
Pout/Eout	±5% or ±10 W	±3%	±3%
Vout	±3%	±3%	±3%
Vin	±3%	±3%	±3%

Table 13. Power Management Bus Accuracy for AC-DC Models

Note.1:

The spec is based on input voltage 115Vac, 230Vac and 240Vdc measurement, the Max. output may be different between low and high line, the load definition where is taken Max. value.

Note.2:

In 240Vdc application, no matter the input polarity is positive or negative, the PSU could operate normally, but Accuracy shall be measured when positive polarity on Neutral. If customer may apply positive polarity on either one, please inform bel early.

Note.3:

For light load reporting requirement, in the normal redundant application, PSU shall report below value to system once the below condition is set, which is not included the PSU that in SMART_ON redundant mode and set as slave. For system power calculation requirement, the reporting performance shall make sure the Pin > Pout situation,

Note.4:

The accuracy of AMB temperature is defined as the temperature around the temperature sensor inside of PSU, thereby this accuracy performance shall measure the closest point on the inlet chassis to internal temperature sensor.

© 2023 Bel Fuse Inc.

Downloaded from Arrow.com.

7.23 LINEAR DATA FORMAT

The Linear Data Format is typically used for commanding and reporting the parameters such as (but not only) the following:

- Output Current,
- Input Voltage,
- Input Current,
- Operating Temperatures,
- Time (durations), and Energy Storage Capacitor Voltage.

The Linear Data Format is a two byte value with:

- An 11 bit, two's complement mantissa and,
- A 5 bit, two's complement exponent (scaling factor),

The format of the two data bytes is illustrated in Figure as show below.

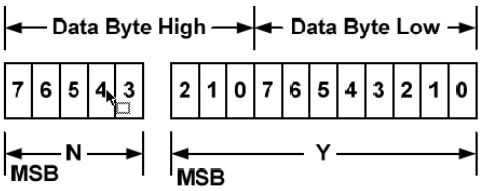

Figure 11. Linear Data Format Data Bytes

The relation between *Y*, *N* and the "real world" value is:
$X = Y \cdot 2^N$

Where, as described above:
X is the "real world" value;
Y is an 11 bit, two's complement integer; and
N is a 5 bit, two's complement integer.

Devices that use the linear format must accept and be able to process any value of *N*.

Downloaded from Arrow.com.

7.24 VOUT_MODE (20h)

The data byte for the VOUT_MODE command is one byte that consists of a three bit Mode and a five bit exponent. The three bit Mode shall be set to indicate the LINEAR mode for output voltage related commands. The five bit Exponent shall be set to indicate the value of the five bit two's complement exponent for the mantissa delivered as the data bytes for an output voltage related command.

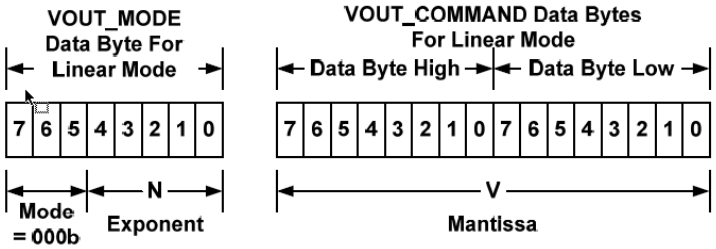

Figure 12. Linear Format Data Bytes

The voltage, in volts, is calculated from the equation Voltage = $V \cdot 2^N$, where:

- V is a 16 bit unsigned binary integer
- N is a 5 bit two's complement binary integer

Sending the VOUT_MODE command with the address set for writing is not supported. If the system sends a VOUT_MODE command for a write, the power supply shall reject the command, and set the Invalid/Unsupported Data bit in the STATUS_CML register.

© 2023 Bel Fuse Inc.

Downloaded from Arrow.com.

8 SMART_ON REDUNDANCY

1.1 OVERVIEW

Below is a block diagram showing the SMART_ON Redundancy architecture. When the power subsystem is in SMART_ON Redundant mode; only the needed power supply to support the best power delivery efficiency are ON. Any additional power supplies; including the redundant power supply, is in SMART_ON Standby state.

Each power supply has an additional signal that is dedicated to supporting SMART_ON Redundancy; SMART_ON_BUS. This signal is a common bus between all power supplies in the system. SMART_ON_BUS is asserted (pulled low) when there is a fault in any power supply OR the power supplies output voltage falls below the Vfault threshold. Asserting the SMART_ON_BUS signal causes all power supplies in SMART_ON Standby state to power ON.

Enabling power supplies to maintain best efficiency is achieved by looking at the Load Share bus voltage and comparing it to a programmed voltage level via a Power Management Bus command.

Whenever there is no SMART_ON Redundant active power supply on the SMART_ON Redundancy bus driving a HIGH level on the bus all power supplies are ON no matter their defined SMART_ON Redundant roll (active or SMART_ON Standby). This guarantees that incorrect programming of the SMART_ON Redundancy states of the power supply will never cause the power subsystem to shut down or become over loaded. The default state of the power subsystem is all power supplies ON. There needs to be at least one power supply in SMART_ON Redundant Active state or Standard Redundant state to allow the SMART_ON Standby state power supplies to go into SMART_ON Standby state.

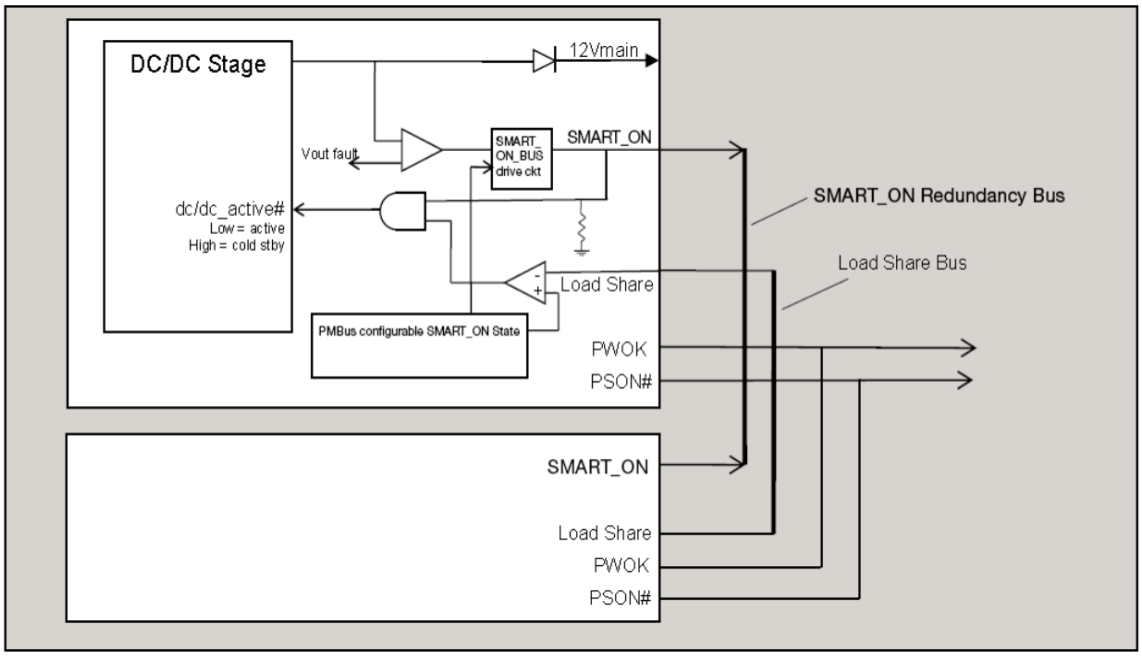

Figure 13. SMART_ON Redundancy 1+1 Functional Block Diagram

SMART_ON_BUS	LOAD SHARE	DC/DC_ACTIVE#	SMART_ON STANDBY POWER SUPPLY STATE(S)
High	$< V_{SMART_ON}$	High	SMART_ON Standby
Low	$< V_{SMART_ON}$	Low	Active
High	$> V_{SMART_ON}$	Low	Active
Low	$> V_{SMART_ON}$	Low	Active

Table 14. Logic Matrix for SMART_ON Standby Power Supplies

Downloaded from Arrow.com.

1.2 POWERING ON SMART_ON STANDBY SUPPLIES TO MAINTAIN BEST EFFICIENCY

Power supplies in SMART_ON Standby state shall monitor the shared voltage level of the load share signal to sense when it needs to power on. Depending upon which position (1, 2, or 3) the system defines that power supply to be in the SMART_ON standby configuration; will slightly change the load share threshold that the power supply shall power on at.

	Enable Threshold for $V_{SMART_ON_EN}$	Disable Threshold for $V_{SMART_ON_DIS}$	SMART_ON_BUS De-asserted / Asserted States
Standard Redundancy	N/A; Ignore dc/dc_ active# signal; power supply is always ON		OK = Tri-state Fault = Low
SMART_ON Redundant Active	NA; Ignore dc/dc_ active# signal; power supply is always ON		OK = High Fault = Low
SMART_ON Standby 1 (02h)	3.2 V (40% of max)	90% x (3.2V x 1/2) = 1.44 V	OK = Tri-state Fault = Low
SMART_ON Standby 2 (03h)	5.0 V (62% of max)	90% x (5.0V x 2/3) = 3.01 V	OK = Tri-state Fault = Low
SMART_ON Standby 3 (04h)	6.7 V (84% of max)	90% x (6.7V x 3/4) = 4.52 V	OK = Tri-state Fault = Low

Table 15. Example Load Share Threshold for Activating Supplies

Notes:
Maximum load share voltage = 8.0 V at 100% of rated output power
These are example load share bus threshold; for any power supply these shall be customized to maintain the best efficiency curve that specific model.

1.3 POWERING ON SMART_ON STANDBY SUPPLIES DURING A FAULT OR OVER CURRENT CONDITION

When an active power supply asserts its SMART_ON_BUS signal (pulling it low), all parallel power supplies in SMART_ON standby mode shall power on within 100µsec.

1.4 SMART_ON REDUNDANCY SMBUS COMMANDS

The Power Management Bus manufacturer specific command MFR_SPECIFIC_00 is used to configure the operating state of the power supply related to SMART_ON redundancy. We will call the command SMART_ON_Redundancy_Config (D0h). Below is the definition of the values used with the Read-Write Byte SMBus protocol with PEC.

VALUE	STATE	DESCRIPTION
00h	Standard Redundancy (default power on state)	Turns the power supply ON into standard redundant load sharing more. The power supply's SMART_ON_BUS signal shall be in Tri-state but still pull the bus low if a fault occurs to activate any power supplies still in SMART_ON Standby state.
01h	SMART_ON Redundant Active	Defines this power supply to be the one that is always ON in a SMART_ON redundancy configuration.
02h	SMART_ON Standby 1 [1]	Defines the power supply that is first to turn on in a SMART_ON redundant configuration as the load increases.
03h	SMART_ON Standby 2 [1]	Defines the power supply that is second to turn on in a SMART_ON redundant configuration as the load increases.
04h	SMART_ON Standby 3 [1]	Defines the power supply that is third to turn on in a SMART_ON redundant configuration as the load increases.
05h	Always Standby [1]	Defines this power supply to be always in SMART_ON redundant configuration no matter what the load condition.

[1] When the SMART_ON_BUS transitions from a high to a low state; each PSU programmed to be in SMART_ON Standby state shall be put into Standard Redundancy mode (SMART_ON_redundancy_Config = 00h). For the power supplies to enter SMART_ON Redundancy mode the system must re-program the power supplies using the SMART_ON_Redundancy_Config command.

Table 16. SMART_ON_Redundancy_Config (D0h)

1.5 SMART_ON REDUNDANT SIGNALS

There is an additional signal defined supporting SMART_ON Redundancy. This is connected to a bus shared between the power supplies; the SMART_ON_BUS.

© 2023 Bel Fuse Inc.

Downloaded from Arrow.com.

9 BLACK BOX

9.1 BLACK BOX FUNCTION DESCRIPTION

This specification defines the requirements for power supplies with Power Management Bus capability to store Power Management Bus and other data into non-volatile memory inside the power supply. The data shall be saved to non-volatile memory upon a critical failure that caused the power supply to shutdown. The data can be accessed via the Power Management Bus interface by applying power to the 12Vstby pins. No AC power need to be applied to the power supply.

9.2 WHEN IS DATA SAVED TO THE BLACK BOX?

Data is saved to the Black Box for the following fault events:

- General fault
- Over voltage on output
- Over current on output
- Loss of AC input
- Input voltage fault
- Fan failure
- Over temperature

9.3 BLACK BOX EVENTS

There are two types of data saved in the black box:

1) System Tracking Data.
2) Power supply event data.

System tracking data is saved to the Black Box whenever the system powers ON or when a power supply is added to the system.

9.4 BLACK BOX PROCESS

- System writes system tracking data to the power supply RAM at power ON.
- System writes the real time clock data to the PSU RAM once every ~5 minutes.
- Power supply tracks number of PSON# and AC power cycles in EEPROM.
- Power supply tracks ON time in EEPROM
- Power supply loads warning and fault event counter data from EEPROM into RAM
- Upon a warning event; the PSU shall increment the associated counter in RAM.
- Upon and fault event the PSU shall increment the associated counter in RAM
- Upon a fault event that causes the PSU to shut down all event data in the PSU's RAM is saved to event data location N in the power supply's EEPROM. This data includes the real time clock, number of AC & PSON# power cycles, PSU ON time, warning event counters and fault event counters.

9.5 RELATED COMMAND OF BLACK BOX

The following command set will be used for Black Box function via the Host System. The commands and protocol used by the Host System and shall be implemented by the microcontroller are defined by this document.

COMMAND CODE	COMMAND NAME	SMBUS TRANSACTION TYPE	NUMBER OF DATA BYTES	REMARK
DCh	MFR_BLACK_BOX	Read only (7)	237	Read the data of the Black box.
DDh	MFR_REAL_TIME	Read/Write (6/7)	4	Read/Write the data of MFR real time.
DEh	MFR_SYSTEM_BLACK_BOX	Read/Write (6/7)	40	Read/Write the data of MFR system black box.
DFh	MFR_BLACKBOX_CONFIG	Read/Write (2/3)	1	Read/Write the data of MFR black box configure.
E0h	MFR_CLEAR_BLACKBOX	Write only (1)	1	Send one byte to clear all data of black box.

Downloaded from Arrow.com.

1) Command Name: MFR_BLACKBOX

Format: Read Block with PEC (237 bytes)

Code: DCh

	ITEM	NUMBER OF BYTES	DESCRIPTION
System Tracking Data	System top assembly number	10	The system will write its Intel part number for the system top assembly to the power supply when it is powered ON. This is 9 ASCII characters.
	System serial number	10	The system shall write the system serial number to the power supply when it is powered ON. This includes the serial number and date code.
	Motherboard assembly number	10	The system will write the motherboard Intel part number for the assembly to the power supply when it is powered ON. This is 9 ASCII characters.
	Motherboard serial number	10	The system shall write the motherboard's serial number to the power supply when it is powered ON. This includes the serial number and date code.
	Present total PSU ON time	3	Total on time of the power supply with PSON# asserted in minutes. LSB = 1 minute.
	Present number of AC power cycles	2	Total number of times the power supply powered OFF then back ON due to loss of AC power. This is only counted when the power supply's PSON# signal is asserted. This counter shall stay at FFFFh once the max is reached.
	Present number of PSON# power cycles	2	Total number of times the power supply is powered OFF then back ON due to the PSON# signal de-asserting. This is only counted when AC power is present to the power supply. This counter shall stay at FFFFh once the max is reached.
Power supply event data (N)		38	Most recent occurrence of saved black box data
Time Stamp			The power supply shall track these time and power cycle counters in RAM. When a black box event occurs, the data is saved into the Black Box.
	Power supply total power on time	3	Total on time of the power supply in minutes. LSB = 1 minute.
	Real Time Clock Data from System (reserved for future use)	4	This time stamp does not need to be generated by the power supply. The system rights a real time clock value periodically to the power supply using the MFR_REAL_TIME command. Format is based on IPMI 2.0. Time is an unsigned 32-bit value representing the local time as the number of seconds from 00:00:00, January 1, 1970. This format is sufficient to maintain time stamping with 1-second resolution past the year 2100. This is based on a long-standing UNIX-based standard for time keeping, which represents time as the number of seconds from 00:00:00, January 1, 1970 GMT. Similar time formats are used in ANSI C.
	Number of AC power cycles	2	Number of times the power supply powered OFF then back ON due to loss of AC power at the time of the event. This is only counted when the power supply's PSON# signal is asserted.
	Number of PSON# power cycles	2	Number of times the power supply is powered OFF then back ON due to the PSON# signal de-asserting at the time of the event. This is only counted when AC power is present to the power supply.
Power Management Bus			The power supply shall save these Power Management Bus values into the Black Box when a black box event occurs. Fast events may be missed due to the filtering effects of the Power Management Bus sensors.
	STATUS_WORD	2	
	STATUS_IOUT	1	
	STATUS_INPUT	1	
	STATUS_TEMPERTATURE	1	
	STATUS_FAN_1_2	1	
	READ_VIN	2	
	READ_IIN	2	
	READ_IOUT	2	
	READ_TEMPERATURE_1	2	

© 2023 Bel Fuse Inc.

Downloaded from Arrow.com.

	READ_TEMPERATURE_2	2	
	READ_FAN_SPEED_1	2	
	READ_PIN	2	
	READ_VOUT	2	
Event Counters			The power supply shall track the total number for each of the following events. These values shall be saved to the black box when a black box event occurs. Once a value has reached 15, it shall stay at 15 and not reset.
	AC shutdown due to under voltage on input	Lower ½	The power supply shall save a count of these critical events to non-volatile memory each time they occur. The counters will increment each time the associated STATUS bit is asserted.
	Thermal shutdown	Upper ½	
	Over current or over power shutdown on output	Lower ½	
	General failure shutdown	Upper ½	
	Fan failure shutdown	Lower ½	
	Shutdown due to over voltage on output	Upper ½	
	Input voltage warning; no shutdown	Lower ½	The power supply shall save into RAM a count of these warning events. Events are count only at the initial assertion of the event/bit. If the event persists without clearing the bit the counter will not be incremented. When the power supply shuts down it shall save these warning event counters to non-volatile memory. The counters will increment each time the associated STATUS bit is asserted.
	Thermal warning; no shutdown	Upper ½	
	Output current power warning; no shutdown	Lower ½	
	Fan slow warning; no shutdown	Upper ½	
Power supply event data (N-1)		38	
Power supply event data (N-2)		38	
Power supply event data (N-3)		38	
Power supply event data (N-4)		38	

2) Name: MFR_REAL_TIME_BLACK_BOX

Format: Write/Read Block with PEC (4 bytes)

Code: DDh

The system shall use this command to periodically write the real time clock data to the power supply.

Format is based on IPMI 2.0. Time is an unsigned 32-bit value representing the local time as the number of seconds from 00:00:00, January 1, 1970. This format is sufficient to maintain time stamping with 1-second resolution past the year 2100. This is based on a long standing UNIX-based standard for time keeping, which represents time as the number of seconds from 00:00:00, January 1, 1970 GMT. Similar time formats are used in ANSIC.

3) Name: MFR_SYSTEM_BLACK_BOX

Format: Write/Read Block with PEC (40 bytes). Low byte first.

Code: DEh

The system uses this command to write the following data to the PSU.

Item	Bytes	
System top assembly number	1-10	Low bytes
System serial number	11-20	
Motherboard assembly number	21-30	
Motherboard serial number	31-40	High bytes

Downloaded from Arrow.com.

4) Name: MFR_BLACKBOX_CONFIG

Format: Read/Write Byte with PEC

Code: DFh

BIT	VALUE	DESCRIPTION
0	0 = disable black box function 1 = enable black box function	Writing a 1 enables the power supply with black box function. Writing a 0 disables the power supply black box function. The state of MFR_BLACKBOX_CONFIG shall be saved in non-volatile memory so that it is not lost during power cycling. Intel shall receive the power supply with the black box function enabled; bit 0 = '1'.
1-7		Reserved

5) Name: MFR_CLEAR_BLACKBOX

Format: Send Byte with PEC

Code: E0h

The MFR_CLEAR_BLACKBOX command is used to clear all black box records simultaneously.

This command is write only. There is no data byte for this command.

9.6 HARDWARE REQUIREMENTS

The SMBus interface shall be used to access the Black Box data. It may be accessed when the power supply is ON or in standby mode. It also may be accessed when no AC power is applied, and power is only applied at the standby output pins by an external source (12Vstby).

© 2023 Bel Fuse Inc.

Downloaded from Arrow.com.

10 BOOTLOADER

10.1 FUNCTION DESCRIPTION

This specification defines the common architecture for in-system power supply firmware updates. It is required that the FW in the main microcontroller on the secondary side of the power supply must be able to be updated in the system using the In-System Firmware Update feature while in the ON state (i.e. with AC power present and PSON# asserted). It is desired that any other microcontroller in the power supply also be able to be updated with this same process (example: primary side microcontroller); however, this is not a requirement at this time.

10.2 FW IMAGE MAPPING

The power supply firmware image shall be made up of two parts; 1) Boot loader; 2) Main program. The system shall contain a backup of the power supply image in its BMC whenever updating the FW to the power supply.

1) Boot Loader:
This is the part of the power supply firmware that is never updated by the system. The power supply shall always be able to recover and power ON into the boot loader mode no matter the state of the power supply's main program. This code shall support the In-System FW update code and basic power supply functions to power ON/OFF, fan cooling, and protections (UV, OV, OC).

2) Main Program:
This is the fully functional power supply program space. There is no requirement to keep a backup image of this code in the power supply since a copy of the power support FW image shall always for kept in the system's BMC.

10.3 POWER SUPPLY OPERATING MODE DURING AND AFTER FIRMWARE UPDATE

1) Firmware update mode in ON state with no power cycle needed:
Power supply may be able to support FW upload in the ON state. The new FW will take effect once it is taken out of FW upload load.

2）Bad image after firmware update:
The power supply must always be able to power on in the boot loader mode with minimal operating capabilities even if the FW image sent to the power supply is bad or corrupt. If in this mode the power supply must be able to still enter the FW upload mode to upload a proper FW image to the PSU.

Downloaded from Arrow.com.

10.4 TEC2401-12-074NA FIRMWARE IMAGE HEADER

Byte 1	CRC Low Byte	Supplier internal use area 10 bytes
Byte 2	CRC High Byte	
Byte 3	Image Offset Low Byte	
Byte 4	Image Offset High Byte	
Byte 5	Image Size Low Byte	
Byte 6	Image Size High Byte	
Byte 7	Image Sector ID Low Byte	
Byte 8	Image Sector ID High Byte	
Byte 9	Image Update Key Low Byte	
Byte 10	Image Update Key High Byte	
Byte 11	T	Model Name 12 bytes
Byte 12	E	
Byte 13	C	
Byte 14	2	
Byte 15	4	
Byte 16	0	
Byte 17	1	
Byte 18	-	
Byte 19	1	
Byte 20	2	
Byte 21	N	
Byte 22	A	
Byte 23	Not used, for future use	Not used, for future use
Byte 24	FW_MAJOR (Bit 7: down revision control bit, Bit 0-6: Major version).	Firmware Revision 3 bytes; in binary format
Byte 25	FW_MINOR_PRIMARY (not used by system)	
Byte 26	FW_MINOR_SECONDARY	
Byte 27	HW_REVISION_FIRST	Hardware Compatible Revision 2 bytes
Byte 28	HW_REVISION_SECOND	
Byte 29	BLOCK SIZE Low Byte	
Byte 30	BLOCK SIZE High Byte	
Byte 31	Write Time Low Byte	
Byte 32	Write Time High Byte	

© 2023 Bel Fuse Inc.

Downloaded from Arrow.com.

10.5 TEC2401-12-074RA FIRMWARE IMAGE HEADER

Byte 1	CRC Low Byte	Supplier internal use area 10 bytes
Byte 2	CRC High Byte	
Byte 3	Image Offset Low Byte	
Byte 4	Image Offset High Byte	
Byte 5	Image Size Low Byte	
Byte 6	Image Size High Byte	
Byte 7	Image Sector ID Low Byte	
Byte 8	Image Sector ID High Byte	
Byte 9	Image Update Key Low Byte	
Byte 10	Image Update Key High Byte	
Byte 11	T	Model Name 12 bytes
Byte 12	E	
Byte 13	C	
Byte 14	2	
Byte 15	4	
Byte 16	0	
Byte 17	1	
Byte 18	-	
Byte 19	1	
Byte 20	2	
Byte 21	R	
Byte 22	A	
Byte 23	Not used, for future use	Not used, for future use
Byte 24	FW_MAJOR (Bit 7: down revision control bit, Bit 0-6: Major version).	Firmware Revision 3 bytes; in binary format
Byte 25	FW_MINOR_PRIMARY (not used by system)	
Byte 26	FW_MINOR_SECONDARY	
Byte 27	HW_REVISION_FIRST	Hardware Compatible Revision 2 bytes
Byte 28	HW_REVISION_SECOND	
Byte 29	BLOCK SIZE Low Byte	
Byte 30	BLOCK SIZE High Byte	
Byte 31	Write Time Low Byte	
Byte 32	Write Time High Byte	

Downloaded from Arrow.com.

10.6 FIRMWARE UPDATE PROCESS

IMPORTANT!

- PSU may be in standby mode or ON mode during FW update process
- If the FW update process is interrupted at any point during the process; the PSU must always be able to return to the boot loader code.
- The PSU must always check that the application program is not corrupted before starting to run from the application program
- During the FW upload process the PSU must always respond to any communication on the bus; acknowledging its address and the supporting commands without holding the bus. For unsupported boot loader commands the PSU may respond with Not Acknowledge or 00h.
- BMC must configure correct addresses into ME at BMC startup to avoid bad PSU address config if AC power is lost or BMC is reset while the PSU update is in progress

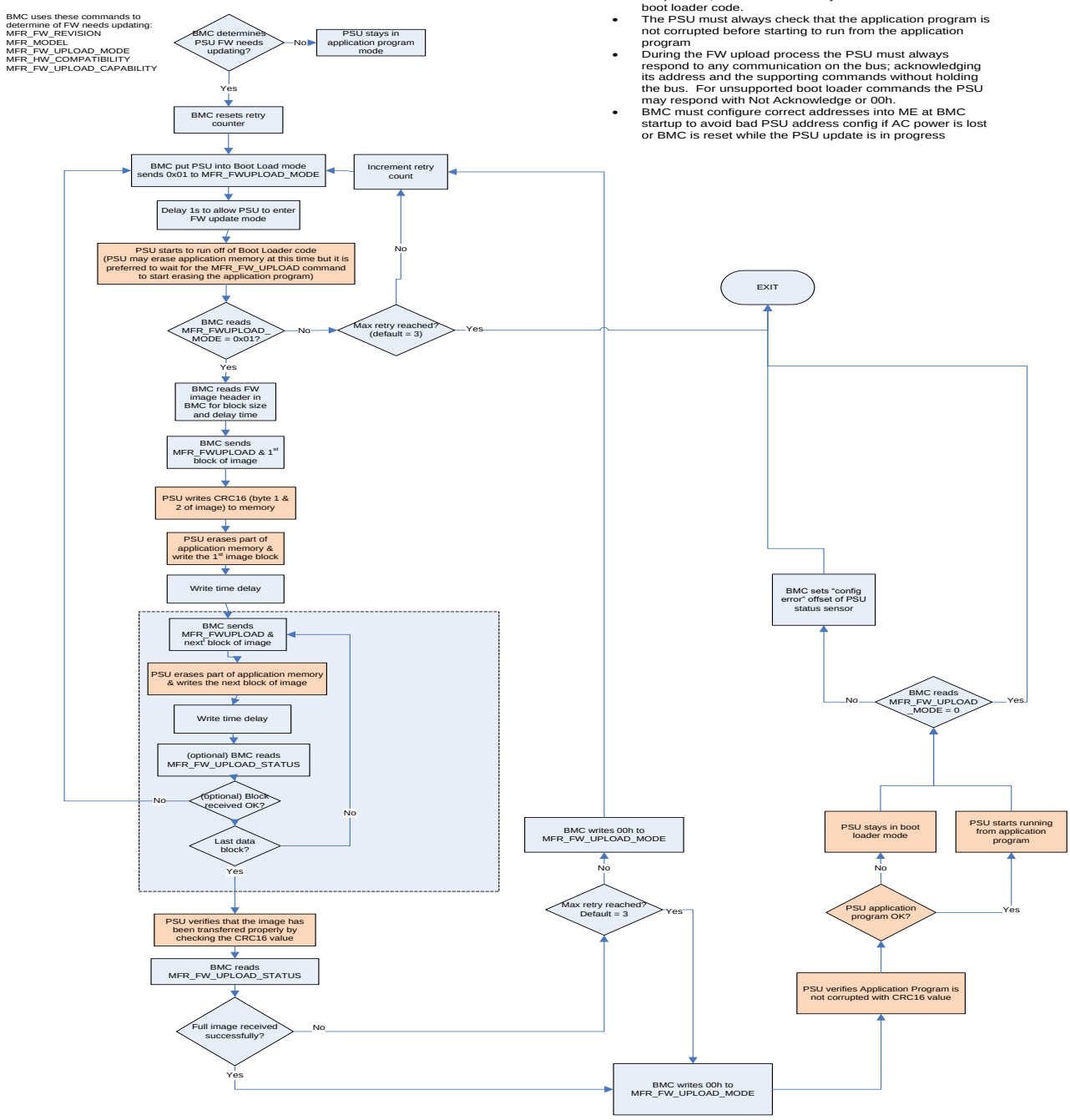

Figure 14. PSU Upload Process

© 2023 Bel Fuse Inc.

Downloaded from Arrow.com.

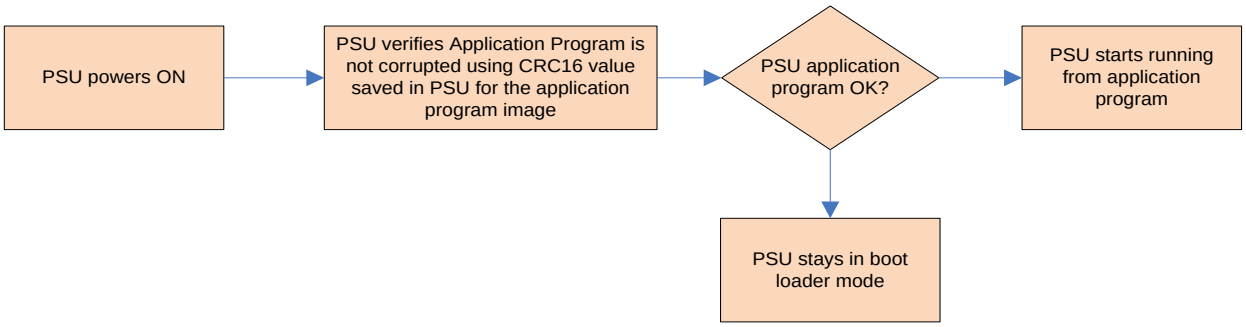

Figure 15. PSU flow during powering ON

Downloaded from Arrow.com.

10.7 RELATED COMMAND OF BOOTLOADER

1) Name: MFR_HW_COMPATIBILITY

Format: Read Word

Code: D4h

BYTES	VALUE	DESCRIPTION
low	ASCII code for first letter/number of the PSU HW compatibility.	This is a COMPATIBILITY value used to tell if there are any changes in the FW that create an incompatibility with the FW. This value only changes when the PSU HW is changed creating an incompatibility with older versions of FW.
high	ASCII code for second letter/number of the PSU HW compatibility.	

2) Name: MFR_FWUPLOAD_CAPABILITY

Format: Read Byte

Code: D5h

The system can read the power supply's FW upload mode capability using this command. For any given power supply; more than one FW upload mode may be supported. The supported FW upload mode(s) must support updating all available FW in the power supply.

BIT	VALUE	DESCRIPTION
0 (for future use)	1 = PSU support FW uploading in standby mode only	For future use
1 (for future use)	1 = PSU supports FW uploading in ON state; but all the new FW will not take effect until a power cycle with PSON#.	For future use
2	1 = PSU supports FW uploading in the ON state and no power cycle needed	Method used for updating the application program in the power supply
3-7	Reserved	

3) Name: MFR_FWUPLOAD_MODE

Format: Read/Write Byte

Code: D6h

BIT	VALUE	DESCRIPTION
0	0 = exit firmware upload mode 1 = firmware upload mode	Writing a 1 puts the power supply into firmware upload mode and gets it ready to receive the 1st image block via the MFR_FW_UPLOAD command. The system can use this command at any time to restart sending the FW image. Writing a 0 puts the power supply back into normal operating mode. Writing a 1 restarts This command will put the PSU into standby mode if the PSU supports FW update in standby mode only. If the power supply image passed to the PSU is corrupt the power supply shall stay in firmware upload mode even if the system requested the PSU to exit the FW upload mode.
1-7		Reserved

4) Name: MFR_FWUPLOAD

Format: Block Write (block = size as defined by the image header)

Code: D7h

BYTES	VALUE	DESCRIPTION
Block size defined in header	Image header & image data	Command used to send each block of the FW image. Header should follow the format described in section 13.4. The image shall contain block sequencing numbers to make sure the PSU puts the right data blocks into the right memory space on the PSU MCU.

© 2023 Bel Fuse Inc.

Downloaded from Arrow.com.

5) Name: MFR_FWUPLOAD_STATUS

Format: Read Word

Code: D8h

At any time during or after the firmware image upload the system can read this command to determine status of the firmware upload process.
Reset: all bits get reset to '0' when the power supply enters FW upload mode.

BIT	DESCRIPTION
0	1 = Full image received successfully
1	1 = Full image not received yet. The PSU will keep this bit asserted until the full image is received by the PSU.
2	1 = Full image received but image is bad or corrupt. Power supply can power ON, but only in 'safe mode' with minimal operating capability.
3 (for future use)	1 = Full image received but image is bad or corrupt. Power supply can power ON and support full features.
4	1 = FW image not supported by PSU. If the PSU receives the image header and determines that the PSU HW does not support the image being sent by the system; it shall not accept the image and it shall assert this bit.
5 – 15	Reserved

6) Name: MFR_FW_REVISION

Format: Block Read, 3 bytes

Code: D9h

BYTE	VALUE	DESCRIPTION
0	0 - 255	Minor revision; secondary
1	0 - 255	Minor revision; primary
2	0 - 255	Bit 7: 1-> Down grading of PSU FW has to be avoided. System BMC can elect to ignore this bit if needed but recommended to follow. 0→ No restriction in downgrading the PSU FW. BMC can update the PSU FW to be in sync with its known version. Bit 0-6: Major revision

7) MFR_MODEL (existing Power Management Bus command)

Code: 9Ah

Maximum of 12 byte value; ending in terminator character.

8) MFR_REVISION (existing Power Management Bus command)

Code: 9Bh

Downloaded from Arrow.com.

11 ELECTROMAGNETIC COMPATIBILITY

11.1 IMMUNITY

The power supply complies with the limits defined in EN 55024.

PARAMETER	DESCRIPTION / CONDITION	CRITERION
Electrostatic Discharge	IEC / EN 61000-4-2	B
Radiated Immunity	IEC / EN 61000-4-3	A
Fast Transient / Burst	IEC / EN 61000-4-4	B
Surge Immunity	IEC / EN 61000-4-5 (2 kV line to ground and 1 kV line to line)	A
Conducted Susceptibility	IEC / EN 61000-4-6	
Power Frequency Magnetic Immunity	IEC / EN 61000-4-8	
Voltage Dips and Interruptions	IEC / EN 61000-4-11	

11.2 EMISSION

PARAMETER	DESCRIPTION / CONDITION	CRITERION
Conducted & Radiated Emissions	EN 55032 / CISPR 32	Class A 6 dB margin
Power Harmonics	EN 61000-3-2	Class A
Voltage Fluctuation and Flicker	EN 61000-3-3	Class A
Acoustic Noise	Variable speed fan(s) incorporated, measured accord. to ECMA 74 and reported according to ISO 9296.	TBD dBA

12 SAFETY / APPROVALS

PARAMETER	DESCRIPTION / CONDITION
Agency Approvals	• UL / CSA 62368-1 (USA / Canada) • EN / IEC 62368-1 (Europe/International) • CB Certificate & Report, IEC 62368-1 (Report includes all country national deviations)) • CE – Low Voltage Directive 2006/95/EC (Europe) • Nordics – EMKO-TSE (74-SEC) 207/94 • GB4943.1 – CNCA Certification (China)
Leakage Current	Max. 3.5 mA at 264 VAC, 60 Hz

13 ENVIRONMENTAL

PARAMETER	DESCRIPTION / CONDITION		MIN	NOM	MAX	UNIT
Ambient Temperature	Operating	TEC2401-12-074NA	0		+50	°C
		TEC2401-12-074RA	0		+50	
	Non-Operating		-40		+70	
Humidity	Operating, relative (non-condensing)		5		85	%
	Non-Operating, relative (non-condensing)		5		95	
Altitude	Operating		0		5 000	ft
	Non-Operating		0		15 200	ft
Mechanical Shock (non-operating)	50 G Trapezoidal Wave, Velocity change = 170 in. / sec					
Vibration (non-operating) sinusoidal	1.5G, pk-pk, 10 Hz-500 Hz–10 Hz, 0.5 octave/min; 2 sweeps per axis					
Vibration (non-operating) random	2 Grms, 10 Hz-500 Hz, 60 mins per axis					
Thermal Shock (non-operating)	50 cycles, 30°C /min. ≧ transition time ≧ 15°C /min		-40		+70	°C
Audible Noise	@ 100% rated DC load and inlet T_A = 25°C				70	dB

© 2023 Bel Fuse Inc.

Downloaded from Arrow.com.

14 RELIABILITY

PARAMETER	DESCRIPTION / CONDITION	MIN	NOM	MAX	UNIT
Mean time between failures (MTBF)	T_A = 25°C, 100% load, according Telcordia SR-332	200 000			h

15 MECHANICAL

PARAMETER	DESCRIPTION / CONDITION	MIN	NOM	MAX	UNIT
Dimensions (W x H x L)			73.5 x 40.0 x 185		mm
			2.89 x 1.57 x 7.28		in
Weight			740		g

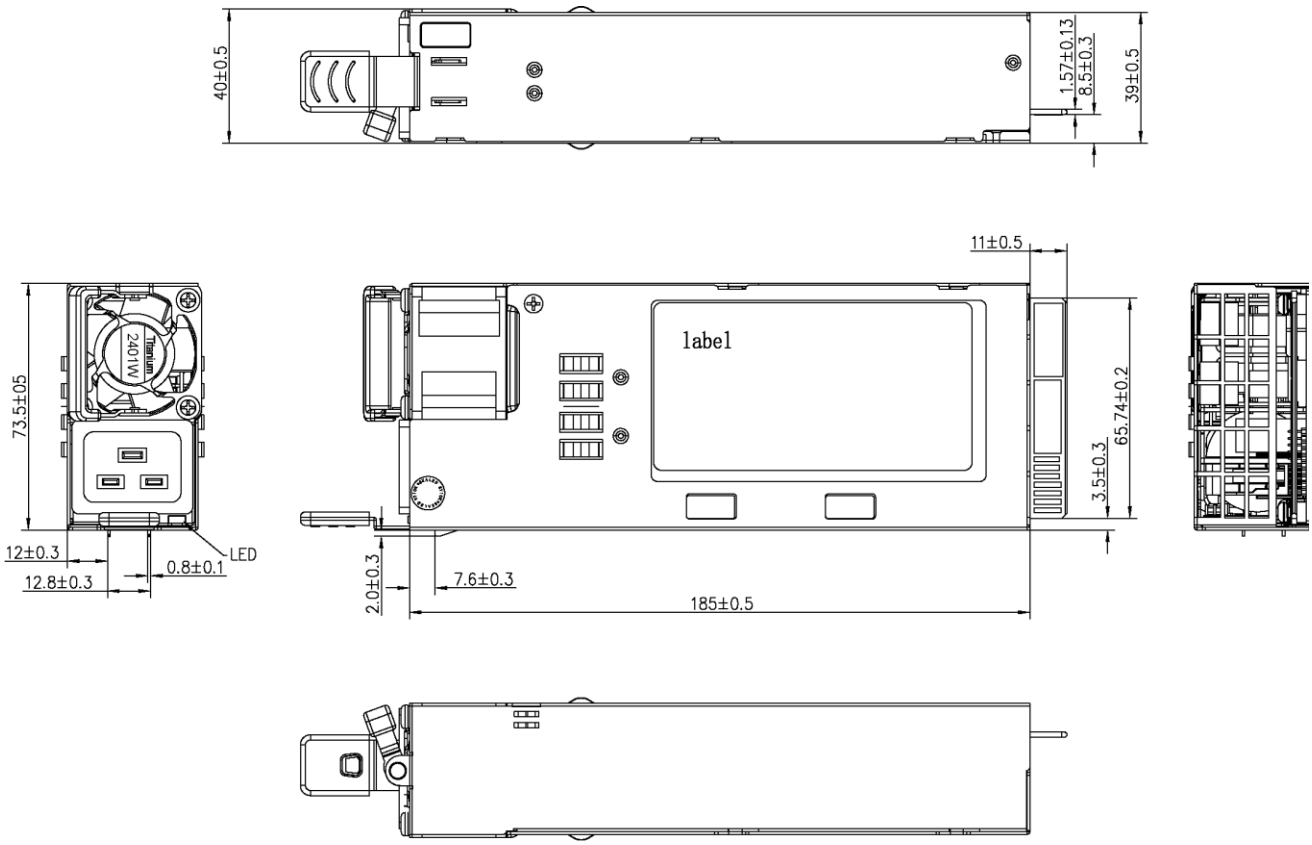

Figure 16. Mechanical Drawing

Downloaded from Arrow.com.

15.1 AIRFLOW DIRECTION

The normal airflow direction is from the card edge connector side to the AC inlet side of the power supply.
The reverse airflow direction flows from the AC inlet side of the power supply to the card edge connector side.

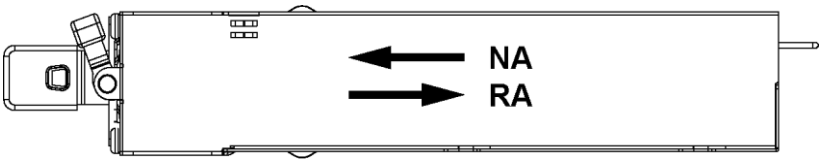

Figure 17. Airflow Direction

15.2 HANDLE RETENTION

The power supply has a handle to assist extraction. The module can be inserted and extracted without the assistance of tools. The power supply has a latch which retains the power supply into the system and prevents the power supply from being inserted or extracted from the system when the AC power cord is pulled into the power supply.
The handle protects the operator from any burn hazard through the use of the Customer Corporation Industrial designed plastic handle.

15.3 LED MARKING AND IDENTIFICATION

The power supply has a single bi-colored LED (green & amber) for indication of the power supply status.

POWER SUPPLY CONDITION	LED STATE
Output ON and OK	GREEN
No AC power to all power supplies	OFF
AC present / Only 12VSB on (PS off) or PS in SMART_ON state	1 Hz Blink GREEN
AC cord unplugged or AC power lost; with a second power supply in parallel still with AC input power.	AMBER
Power supply warning events where the power supply continues to operate; high temp, high power, high current, slow fan.	1 Hz Blink Amber
Power supply critical event causing a shutdown; failure, OCP, OVP, Short circuit , Over temperature, Fan Fail	AMBER
Power supply FW updating	2 Hz Blink GREEN

© 2023 Bel Fuse Inc.

Downloaded from Arrow.com.

16 CONNECTORS

16.1 AC INLET CONNECTOR

The AC input connector is an IEC 320 C-20 power inlet. This inlet is rated for 16 A / 250 VAC.

16.2 DC OUTPUT CONNECTOR PIN LOCATIONS

The power supply shall use a card edge output connection for power and signal that is compatible with a 2x25 Power Card Edge connector (equivalent to 2x25 pin configuration of the Oupiin power card connector 9305-4P12S14B7SAA01)

PIN-OUT	DEFINITION	PIN-OUT	DEFINITION
A1-9	GND	B1-9	GND
A10-18	+12V	B10-18	+12V
A19	Power Management Bus SDA	B19	A0 (SMBus address)
A20	Power Management Bus SCL	B20	A1 (SMBus address)
A21	PSON#	B21	+12VSB
A22	SMBAlert#	B22	SMART_ON
A23	Return Sense	B23	+12V Load Share Bus
A24	+12V Remote Sense	B24	PRESENT#
A25	PWOK	B25	Vin_good

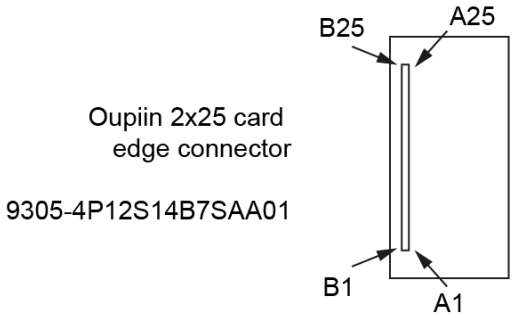

Figure 18. Back DC output golden finger port

For more information on these products consult: tech.support@psbel.com

NUCLEAR AND MEDICAL APPLICATIONS - Products are not designed or intended for use as critical components in life support systems, equipment used in hazardous environments, or nuclear control systems.
TECHNICAL REVISIONS - The appearance of products, including safety agency certifications pictured on labels, may change depending on the date manufactured. Specifications are subject to change without notice.

Downloaded from Arrow.com.