0.4 mm Pitch, Horizontal Mating, Board-to-Micro-Coaxial Cable Connector

DF81 Series

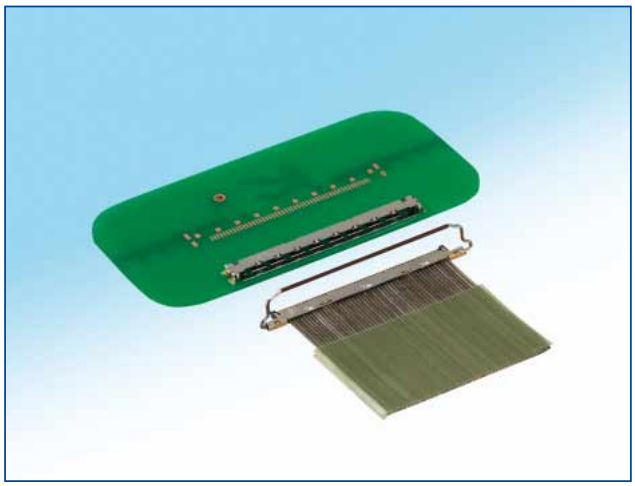

Features

1.Space saving design

Utilizing its 0.4 mm pitch, this horizontal connector offers a space saving design and a low height of 0.9 mm in a single row connector.

2.High speed transmissions

Designed to optimize transmission speeds, the DF81 series provides superior signal characteristics.

•eDP™ [Embedded DisplayPort™] Ver. 1.3 compatible 5.4 Gbps

•MIPI (D-PHY)

3.Enhanced shielding

Shielding capacity has increased by providing multiple grounding points (Fig.1).

4.Positive locking structure

The positive locking structure utilizes a rotary latch that prevents incomplete mating. (Fig.2)

5.Excellent mating operation

Excellent self-alignment allows for easier mating. (Fig.3)

6.Accepts both micro coaxial cable and discrete wire

Its versatility allows micro coaxial cable and discrete wire to be used together on a single connector.

7.Solder wicking prevention

Nickel barriers are strategically placed between the receptacle's contact area and the soldered lead area to prevent solder wicking.

8.RoHS compliant, Halogen-free

Chlorine and bromine are not used in these connectors and do not exceed standard values.

* It is defined according to IEC 61249-2-21.
Br: 900 ppm or less, Cl: 900 ppm or less, Br + Cl: 1,500 ppm or less

Enhanced shielding capability

·Grounding connection between plug connector and receptacle connector
30 contacts: 5 locations / 40 contacts: 7 locations / 50 contacts: 9 locations

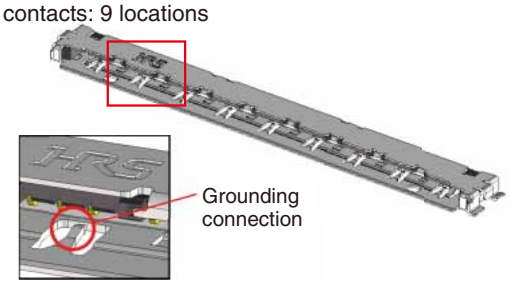

·Grounding connection between receptacle connector and PCB
30 contacts: 10 locations / 40 contacts: 12 locations / 50 contacts: 14 locations

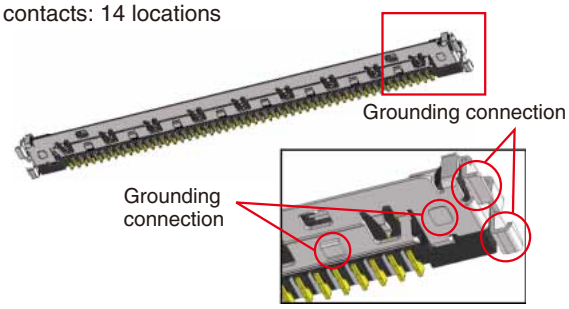

Fig.1

Positive lock by using the latch

·Unlocking is possible by rotating the latch.

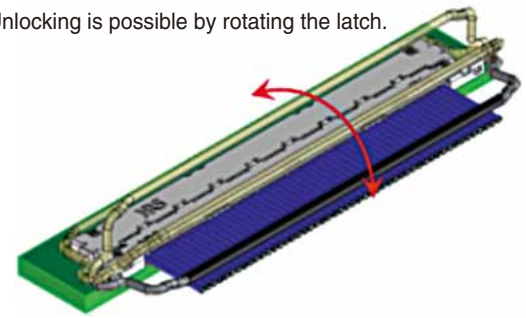

Fig.2

Excellent mating operability

·Wide self-alignment (X direction: ±0.45, Z direction: ±0.15)

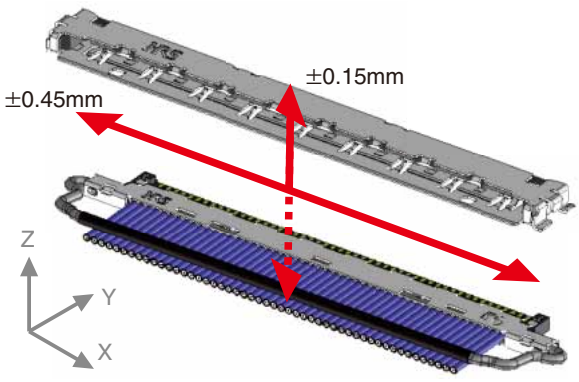

Fig.3

Aug.1.2026 Copyright 2026 HIROSE ELECTRIC CO., LTD. All Rights Reserved.

Downloaded from Arrow.com.

■Product specifications

Ratings	Rated Current	[Discrete wire] AWG #34: 0.3 A(MAX0.8 A) AWG #36: 0.3 A(MAX0.8 A) [Micro coaxial cable] AWG #36: 0.3 A(MAX0.8 A) AWG #40: 0.25 A AWG #42: 0.2 A AWG #44: 0.15 A AWG #46: 0.1 A	(Note 3) (Note 4)	Operating Temperature Range Operating Humidity Range	-35 to 85℃(Note 1) 20 to 80℃
	Rated Voltage	100 V AC/DC		Storage Temperature Range Storage Humidity Range	-10 to 60℃ (Note 2) 40 to 70℃(Note 2)

Items	Specifications	Conditions
1. Insulation Resistance	50 MΩ or greater	Measured at 100 V DC
2. Withstanding Voltage	No flashover or breakdown	Conduct 250 V AC for one minute
3. Contact Resistance	Signal: 80 mΩ or lower GND: 80 mΩ or lower	Measured at 100 mA (DC or 1,000 Hz)
4. Vibration Resistance	No electric outage of 1μs or greater	10 cycles in each of three directions at frequency 10-55 Hz, single amplitude 0.75 mm
5. Moisture Resistance	Contact resistance (amount of change from the initial state): 50 mΩ or lower Insulation resistance: 25 MΩ or greater	Temperature: 40± 2°C, Humidity: 90 to 95%, Leave 96 hours
6. Temperature Cycles	Contact resistance (amount of change from the initial state): 50 mΩ or lower Insulation resistance: 25 MΩ or greater	(-55°C: 30 minutes → 5 to 35°C: 2 to 3 minutes → 85°C: 30 minutes → 5 to 35°C: 2 to 3 minutes) 5 cycles
7. Mating Cycles	Contact resistance (amount of change from the initial state): 50 mΩ or lower	30 cycles
8. Solder Heat Resistance	There should be no dissolution of the resin part which will influence the performance.	Reflow: According to the Recommended Temperature Profile Hand soldering: Soldering iron temperature of 350°C for 3 seconds

(Note 1) Temperature rise at the time of electrification is included.
(Note 2) The term “storage” refers to the long-term storage of unused products in its original packaging before PCB mounting. Operating Temperature/Humidity Ranges are applied to the deenergized state after mounting of PCB and the temporary storage state during transportation.
(Note 3) Current will vary depending on use conditions. "MAX" is rating current as only two of them turn on electricity.
(Note 4) Rated current value is set only using the temperature rise value of the connector.

■Materials

Product	Parts	Materials	Treatment	UL Recognition
Receptacle	Insulator	LCP	Black	UL94V-0
	Contact	Phosphor bronze	Gold plating	————
	Metal fitting	Stainless steel	Partially gold plated	————
Plug	Insulator	LCP	Black	UL94V-0
	Contact	Phosphor bronze	Gold plating	————
	Outer shell	Stainless steel	Partially gold plated	————
Shell	Outer shell	Stainless steel	Partially gold plated	————
Latch	Locking bar	Stainless steel / polyester	————	————

■Product Number Structure

Refer to the chart below when searching for the part number nomenclature. Please make a selection from the connectors listed on pages 3 to 6 of this catalog when placing orders.

●Connector

DF ❶ 81 ❷ - ＊ ❸ S ❹ - 0.4 ❺ H ❻ (＊＊) ❼

DF ❶ 81 ❷ - ＊ ❸ P ❹ - SHL ❽

❶	Series Name: DF
❷	Series No.: 81/81D
❸	Numbers of Contacts: 30, 40, 50
❹	Connector type S: Receptacle P: Plug
❺	Contact pitch: 0.4mm
❻	Termination Type H: Right Angle SMT SD: Solder wire termination
❼	Packaging Type (51): Embossed packaging
❽	Parts for Assembly SHL: Outer shell LCH: Latch

Aug.1.2026 Copyright 2026 HIROSE ELECTRIC CO., LTD. All Rights Reserved.

Downloaded from Arrow.com.

■Receptacle (SMT)

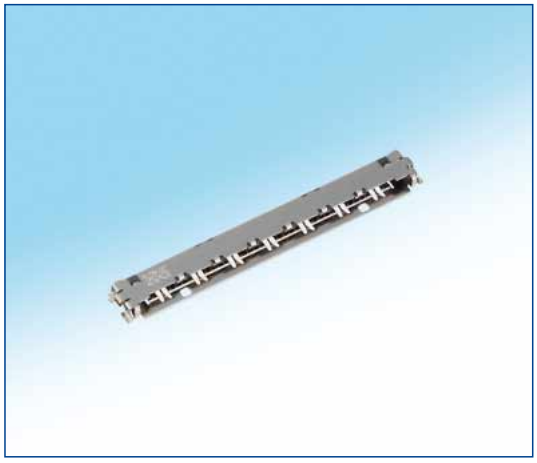

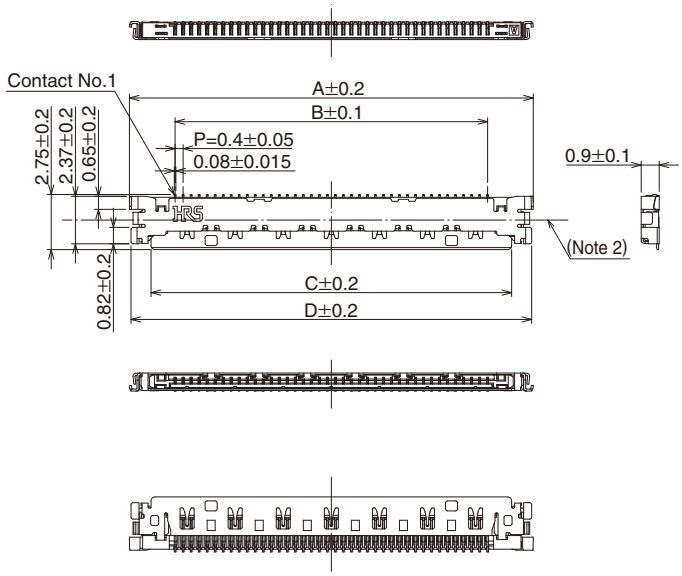

Unit: mm

Product No.	HRS No.	No. of contacts	A	B	C	D
DF81-30S-0.4H(**)	662-8104-5 **	30	16.16	11.6	14	16
DF81-40S-0.4H(**)	662-8100-4 **	40	20.16	15.6	18	20
DF81-50S-0.4H(**)	662-8102-0 **	50	24.16	19.6	22	24

[Specification Number] -**, (**)
(51): Embossed packaging

(Note 1) Please place your orders for embossed packaged products in full reel quantities (8,000 connectors/reel).
(Note 2) Indicates the center line of the connector with the size of 2.37±0.2. This matches to the center line of the connector with the size of 2.57±0.02 shown in the recommended pattern schematic.

◆Recommended PCB mounting pattern

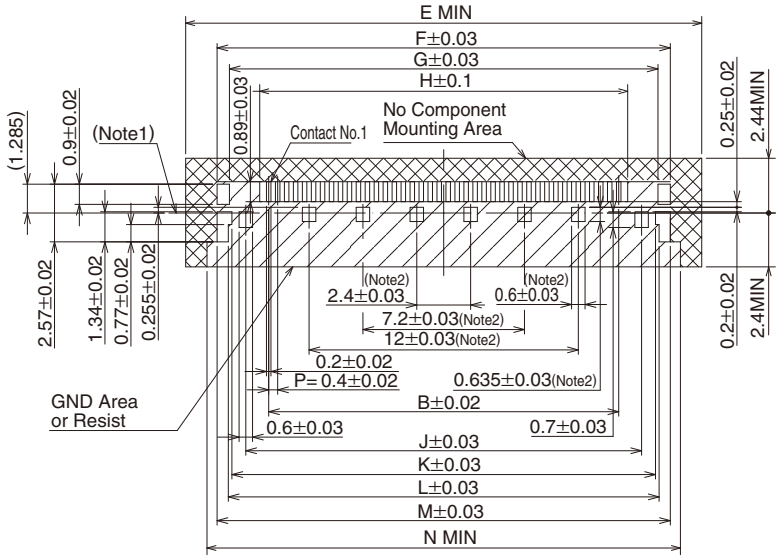

Unit: mm

Product No.	HRS No.	No. of contacts	B	E	F	G	H	J	K	L	M	N
DF81-30S-0.4H(**)	662-8104-5 **	30	11.6	19	16.2	15.1	12.4	13.64	14.88	15.2	16.2	17.1
DF81-40S-0.4H(**)	662-8100-4 **	40	15.6	23	20.2	19.1	16.4	17.64	18.88	19.2	20.2	21.1
DF81-50S-0.4H(**)	662-8102-0 **	50	19.6	27	24.2	23.1	20.4	21.64	22.88	23.2	24.2	25.1

(Note 1) Indicates the center line of the connector with the size of 2.57±0.02. This matches to the center line of the connector with the size of 2.37±0.2 shown in the connector diagram.
(Note 2) The amount of space occupied depends on the pin count. This schematic represents the 40 contact connector.

Aug.1.2026 Copyright 2026 HIROSE ELECTRIC CO., LTD. All Rights Reserved.

Downloaded from Arrow.com.

■Plug



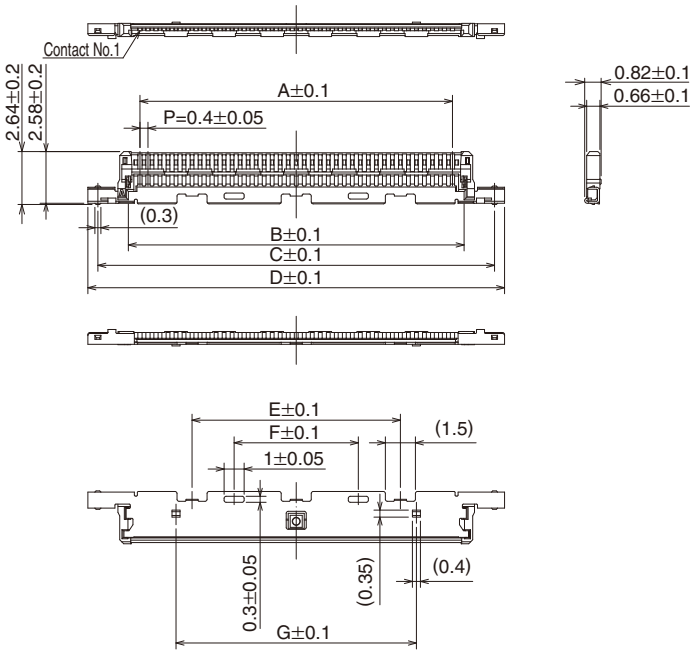

[Specification Number] -**, (**)
(51): Embossed packaging

Unit: mm

Product No.	HRS No.	No. of contacts	A	B	C	D	E	F	G	H
DF81D-30P-0.4SD(51)	662-8119-2 51	30	11.6	12.76	15.8	16.8	4.4	8.4	7.2	12.6
DF81D-40P-0.4SD(51)	662-8120-1 51	40	15.6	16.76	19.8	20.8	10.4	6.2	12.0	16.6
DF81D-50P-0.4SD(51)	662-8122-7 51	50	19.6	20.76	23.8	24.8	14.4	10.2	16.8	20.6

(Note 1) Please place your orders for embossed packaged products in full reel quantities (8,000 connectors/reel).
(Note 2) Outer shell (DF81-*P-SHL)/latch (DF81-*P-LCH) is required when connecting wires.

◆Recommended micro coaxial cable preparation

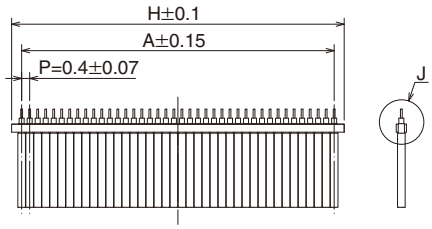

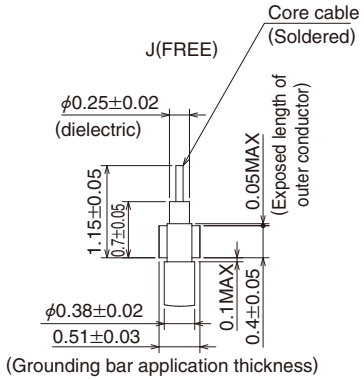

(Note 1) Lead free pre-soldering is required to center conductors before termination.

Aug.1.2026 Copyright 2026 HIROSE ELECTRIC CO., LTD. All Rights Reserved.

Downloaded from Arrow.com.

■Outer shell



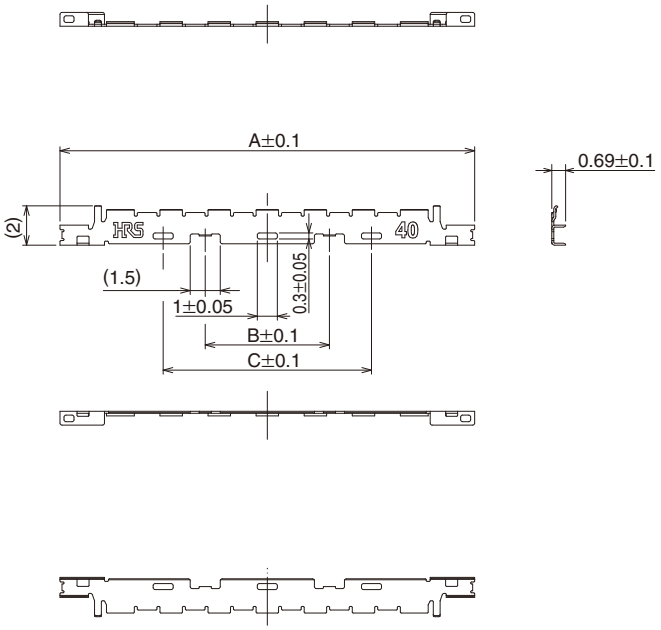

Unit: mm

Product No.	HRS No.	No. of contacts	A	B	C
DF81-30P-SHL	662-8106-0	30	16.7	———	6.4
DF81-40P-SHL	662-8108-6	40	20.7	6.2	10.4
DF81-50P-SHL	662-8112-3	50	24.7	10.2	14.4

(Note 1) Please place your orders in full reel quantities (10,000 shells/reel).

■Latch

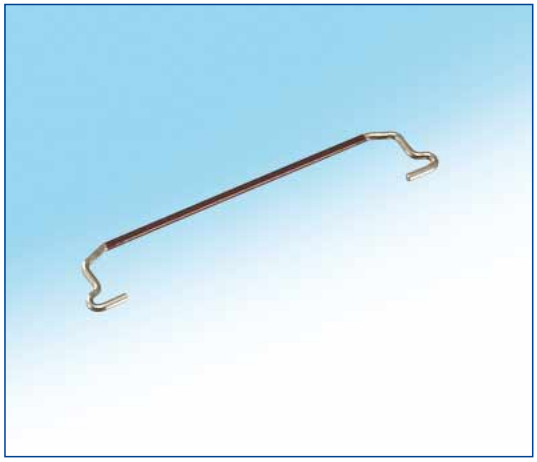

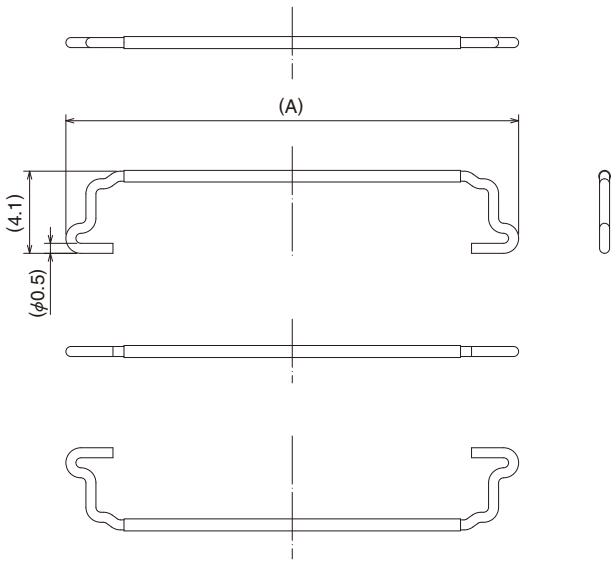

Unit: mm

Product No.	HRS No.	No. of contacts	A
DF81-30P-LCH	662-8107-3	30	18.6
DF81-40P-LCH	662-8109-9	40	22.6
DF81-50P-LCH	662-8113-6	50	26.6

(Note 1) Please place your orders by full box quantities (10,000 latches/box).

Aug.1.2026 Copyright 2026 HIROSE ELECTRIC CO., LTD. All Rights Reserved.

Downloaded from Arrow.com.

◆Emboss tape dimensions (conforms to JIS C 0806)

●Receptacle

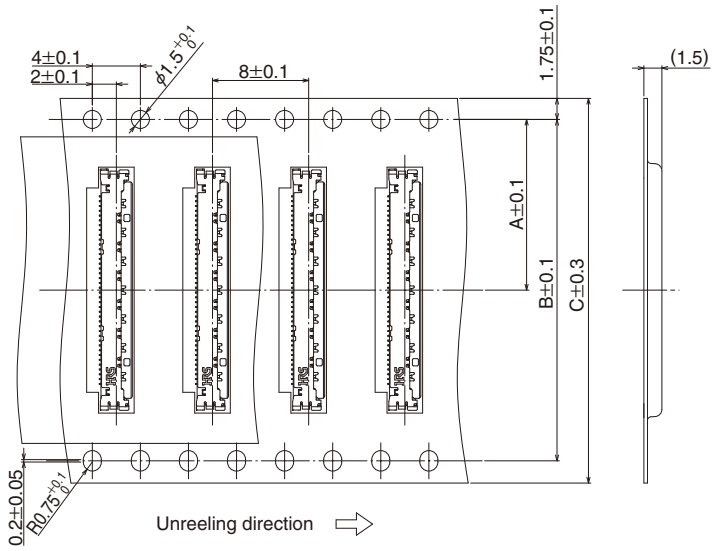

● Reel Condition Dimensions

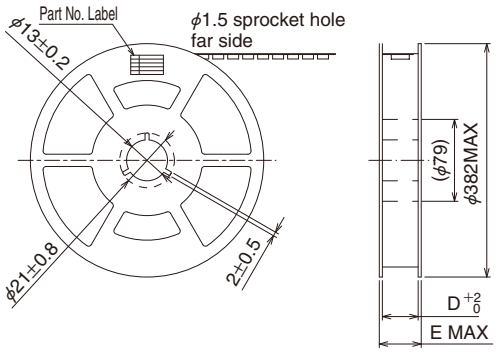

Unit: mm

Product No.	HRS No.	No. of contacts	A	B	C	D	E
DF81-30S-0.4H(51)	662-8104-5 51	30	11.5	———	24	24.4	30.4
DF81-40S-0.4H(51)	662-8100-4 51	40	14.2	28.4	32	32.4	38.4
DF81-50S-0.4H(51)	662-8102-0 51	50	20.2	40.4	44	44.4	50.4

(Note 1)Sprocket hole for 30 contacts is provided only on one side.(Only a φ1.5 hole on the top of the diagram)

◆Emboss Tape Dimensions

●Plug

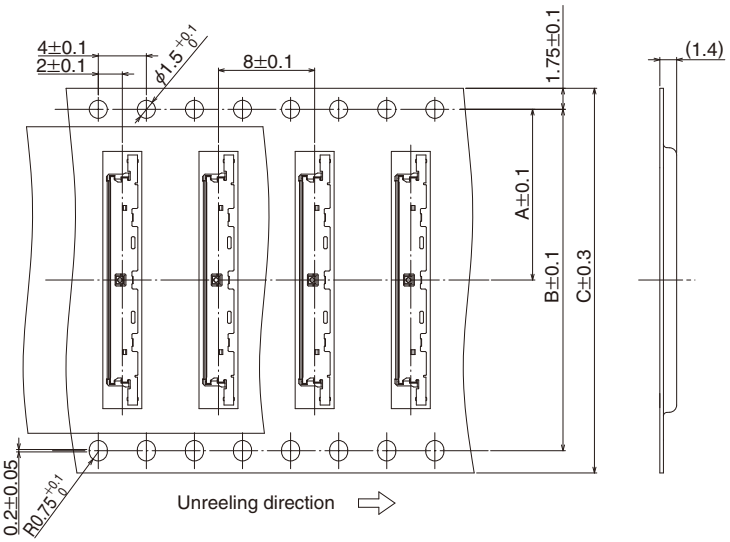

●Reel Dimensions

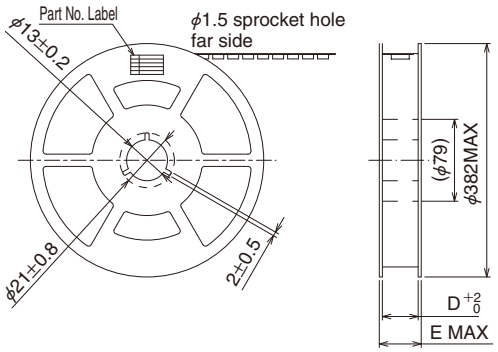

Unit: mm

Product No.	HRS No.	No. of contacts	A	B	C	D	E
DF81D-30P-0.4SD(51)	662-8119-2 51	30	11.5	———	24	24.4	30.4
DF81D-40P-0.4SD(51)	662-8120-1 51	40	14.2	28.4	32	32.4	38.4
DF81D-50P-0.4SD(51)	662-8122-7 51	50	20.2	40.4	44	44.4	50.4

(Note 1)Sprocket hole for 30 contacts is provided only on one side.(Only a φ1.5 hole on the top of the diagram)

Aug.1.2026 Copyright 2026 HIROSE ELECTRIC CO., LTD. All Rights Reserved.

Downloaded from Arrow.com.

◆Precautions

1. Recommended Temperature Profile (Compatible with lead-free soldering)	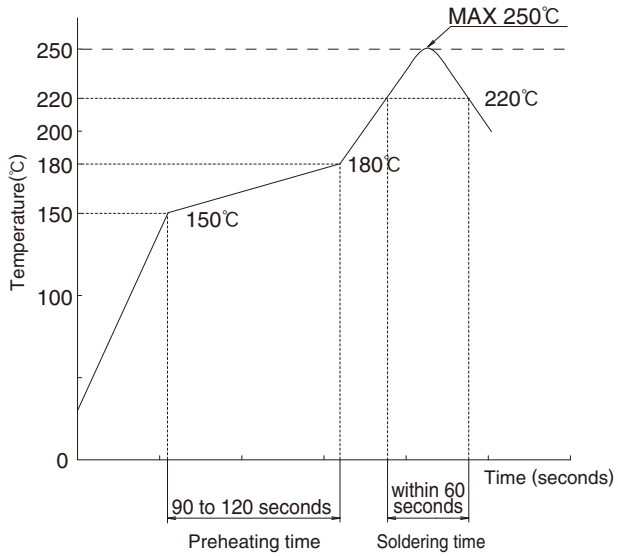 [Applicable Conditions] 1. Peak temperature: max. 250°C 2. Heating unit: no less than 220°C, within 60 seconds 3. Preheating unit: 150 to 180°C for 90 to 120 seconds 4. Number of times: no more than 2 times ∗ Solder composition: Sn-3Ag-0.5Cu (Note 1) This temperature profile is a recommended value.
2. Recommended Hand Soldering Conditions	Temperature of soldering iron: max. 350, soldering time: within 3 seconds
3. Recommended Screen Thickness and Aperture Ratio (Pattern surface ratio)	Thickness: 0.10 mm, aperture ratio: 80% for lead section, 50% to 90% for grounding section(See the separate specifications for approval.)
4. Warpage of the Board	A maximum of 0.02 mm at the center of connector, as measured from either end of the connector
5. Cleaning Conditions	IPA cleaning is allowed. (Cleaning is not recommended because cleaning may change the mating/unmating feeling etc. Please contact us when you use other cleaning agents.)

●Precautions when mating/ unmating

Handling Precautions

■Inserting the connector

1.Latch position

The latch needs to begin on the top side of the connector. If not, you will not be able to engage the locking mechanism and the mating process cannot be completed.

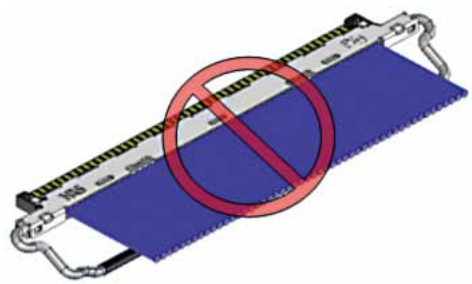

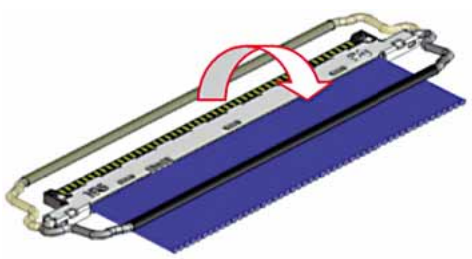

Aug.1.2026 Copyright 2026 HIROSE ELECTRIC CO., LTD. All Rights Reserved.

Downloaded from Arrow.com.

Handling Precautions

2.Temporary insertion

Position the plug so that it is parallel to the receptacle. Align the plug, and then gently insert the plug into the receptacle. The plug can now be inserted effortlessly until it reaches the bottom of the temporary insertion position.

[Temporary insertion: Acceptable]
The case hole of the plug self-alignment section and the tip of the plug contact cannot be seen.

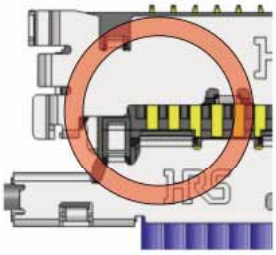

[Temporary insertion: Not acceptable]
Insufficient insertion. The case hole of the plug self-alignment section and the tip of the plug contact can be seen.

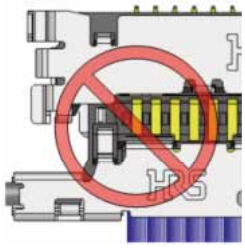

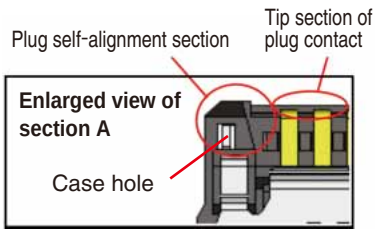

Section A

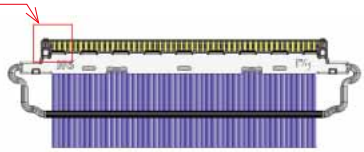

■Locking

Rotating the bail latch engages the locking/unlocking mechanism.

1.How to Lock

Rotate the bail latch to lock.

Make sure that the bail latch rides over the latch holding section located on each end of the receptacle.(2 locations in total)

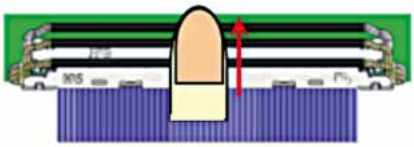

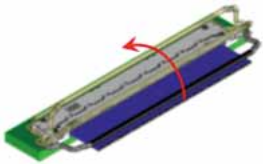

B

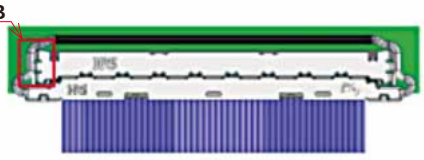

[Latch engagement: Acceptable]
The bail latch is riding over the latch holding section on the receptacle.

Enlarged view of section B

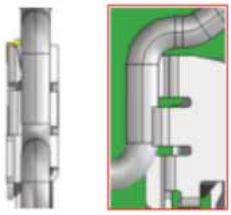

[Latch engagement: Not acceptable]
The bail latch is not riding over the latch holding section on the receptacle.

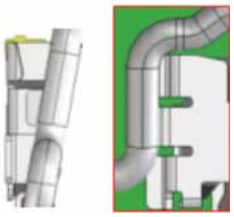

2.How to Unlock

Rotate the bail latch to unlock.

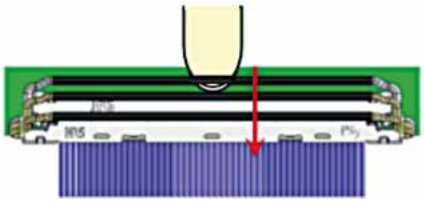

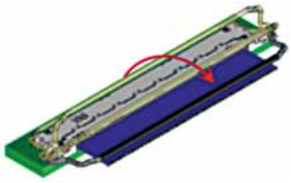

- For details on mating/unmating procedures, see the separate mating/unmating procedure sheet.
- Please note that mating/unmating without mounted on a PCB may cause damage and contact deformation to the connector.
- Please note that mating/unmating with excessive force in wrong directions may cause damage to the connector.
- During hand soldering, do not apply flux which will cause flux migration on connector.

Aug.1.2026 Copyright 2026 HIROSE ELECTRIC CO., LTD. All Rights Reserved.

Creative Links to World Electronics ®

HRS

HIROSE ELECTRIC CO.,LTD.
2-6-3,Nakagawa Chuoh,Tsuzuki-Ku,Yokohama-Shi 224-8540,JAPAN
TEL: +81-45-620-3526 Fax: +81-45-591-3726
http://www.hirose.com
http://www.hirose-connectors.com

The characteristics and the specifications contained herein are for reference purpose. Please refer to the latest customer drawings prior to use.
The contents of this catalog are current as of date of 06/2014. Contents are subject to change without notice for the purpose of improvements.

Downloaded from Arrow.com.