AC-DC Power Supplies DIN Rail Type

Power Factor Correction | World wide | Safety Approvals | EMI | Inrush current limiting | OCP | OVP

KL-series

Feature

For DIN (35mm) rail products
Wide operating ambient temperature range
I/O terminal has 2 types, Euro Style and Barrier Blocks Style
Built in overcurrent protection, overvoltage protection circuits
Complies with SEMI F-47 (refer to Instruction Manual 1.1)

Safety agency approvals

UL60950-1, UL508, C-UL (CSA60950-1), EN62368-1
Complies with DEN-AN

5-year warranty (refer to Instruction Manual)

CE marking

Low Voltage Directive
RoHS Directive

UKCA marking

Electrical Equipment Safety Regulations
RoHS Regulations

EMI

Complies with FCC-B, CISPR22-B, EN55011-B, EN55022-B, VCCI-B

EMS Compliance : EN61204-3, EN61000-6-2

EN61000-4-2
EN61000-4-3
EN61000-4-4
EN61000-4-5
EN61000-4-6
EN61000-4-8
EN61000-4-11

Downloaded from Arrow.com.

COSEL AC-DC Power Supplies DIN Rail Type

KLEA/KLNA120F

Ordering information

KL□ A 120 F -□□ -□

① ② ③ ④ ⑤ ⑥

Example recommended EMI/EMC filter
NAC-04-472-D

High voltage pulse noise type : NAP series
Low leakage current type : NAM series
*A higher current rating EMI/EMC filter may be recommended in view of the other devices that could be connected in parallel with the power supply.

①Series name
KLE : Euro Style I/O Terminals
KLN : Barrier Blocks Style I/O Terminals
②Single output
③Output wattage
④Universal input
⑤Output voltage
⑥Option
C : with Coating
N2: Screw mounting

*Make sure necessary tests will be carried out on your end equipment with the power supply installed in accordance with any required EMC/EMI regulations.

MODEL	KLEA/KLNA120F-24	KLEA/KLNA120F-48
MAX OUTPUT WATTAGE[W]	120	120
DC OUTPUT	24V 5A	48V 2.5A

SPECIFICATIONS

	MODEL		KLEA/KLNA120F-24	KLEA/KLNA120F-48
INPUT	VOLTAGE[V]		AC85 - 264 1φ (Refer to "Derating") *9	
	CURRENT[A]	ACIN 115V	1.2typ	
		ACIN 230V	0.6typ	
	FREQUENCY[Hz]		50 / 60 (45 - 66)	
	EFFICIENCY[%]	ACIN 115V	86.5typ	
		ACIN 230V	88.0typ	
	POWER FACTOR	ACIN 115V	0.98typ	
		ACIN 230V	0.90typ	
	INRUSH CURRENT[A] *1	ACIN 115V	20typ (Io=100%)(at cold start Ta=25℃)	
		ACIN 230V	40typ (Io=100%)(at cold start Ta=25℃)	
	LEAKAGE CURRENT[mA]		0.45 / 0.75max (ACIN 100V / 240V 60Hz, Io=100%, According to IEC62368-1 and DEN-AN)	
OUTPUT	VOLTAGE[V]		24	48
	CURRENT[A]		5	2.5
	LINE REGULATION[mV] *2		96max (Io=30-100%) *8	192max (Io=30-100%) *8
	LOAD REGULATION[mV] *2		150max (Io=30-100%) *8	300max (Io=30-100%) *8
	RIPPLE[mVp-p] *3	0 to +70℃	150max	150max
		-20 - 0℃	240max	240max
		Io=0 - 30%	500max	650max
	RIPPLE NOISE[mVp-p] *3	0 to +70℃	180max	180max
		-20 - 0℃	300max	300max
		Io=0 - 30%	500max	650max
	TEMPERATURE REGULATION[mV]	0 to +70℃	240max	480max
		-20 to +70℃	290max	600max
	DRIFT[mV] *4		96max	192max
	START-UP TIME[ms]		500typ (ACIN 115V, Io=100%)	
	HOLD-UP TIME[ms]		20typ (ACIN 115V, Io=100%)	
	OUTPUT VOLTAGE ADJUSTMENT RANGE[V]		21.60 to 26.40	43.20 to 52.80
	OUTPUT VOLTAGE SETTING[V]		24.00 to 24.96	48.00 to 49.92
PROTECTION CIRCUIT AND OTHERS	OVERCURRENT PROTECTION		Works over 105% of rating and recovers automatically	
	OVERVOLTAGE PROTECTION[V]		27.60 to 33.60	54.00 to 67.20
	DC_OK LAMP		LED (Green)	
ISOLATION	INPUT-OUTPUT		AC3,000V 1minute, Cutoff current = 10mA, DC500V 50MΩ min (At Room Temperature)	
	INPUT-PE		AC2,000V 1minute, Cutoff current = 10mA, DC500V 50MΩ min (At Room Temperature)	
	OUTPUT-PE		AC500V 1minute, Cutoff current = 100mA, DC500V 50MΩ min (At Room Temperature)	
ENVIRONMENT	OPERATING TEMP.,HUMID.AND ALTITUDE		-20 to +70℃, 20 - 90%RH (Non condensing), Type tested for -40℃ start-up (Refer to "Derating")	
	STORAGE TEMP.,HUMID.AND ALTITUDE		-30 to +85℃, 20 - 90%RH (Non condensing)	
	VIBRATION *7		10 - 55Hz, 19.6m/s² (2G), 3minutes period, 60 minutes along Z axis (Non operating, mounted on DIN Rail)	
	IMPACT		196.1m/s² (20G), 11ms, once each X, Y and Z axis (Packing state)	
SAFETY AND NOISE REGULATIONS	AGENCY APPROVALS		UL60950-1, C-UL (CSA60950-1), EN62368-1, UL508, Complies with DEN-AN	
	CONDUCTED NOISE		Complies with FCC-B, VCCI-B, CISPR22-B, EN55011-B, EN55022-B	
	HARMONIC ATTENUATOR		Complies with IEC61000-3-2 (Class A) *5	
OTHERS	CASE SIZE *6		38×124×117mm (W×H×D) [1.5×4.88×4.61 inches]	
	WEIGHT		580g max	
	COOLING METHOD		Convection	

*1 The value is primary surge. The current of input surge to a built-in EMI/EMC Filter(0.2ms or less)is excluded.
*2 Please contact us about dynamic load and input response.
*3 This is the value that measured on measuring board with capacitor of 22μF and 0.1μF at 150mm from output terminal.
Measured by 20MHz oscilloscope or Ripple-Noise meter (Equivalent to KEISOKU-GIKEN: RM103).
Please refer to the instruction manual 1.5.
*4 Drift is the change in DC output for an eight hour period after a half-hour warm-up at 25℃, with the input voltage held constant at the rated input/output.
*5 Please contact us about another class.
*6 Case size contains neither the umbo.
*7 Only as standard mounting orientation (A). Refer to "Assembling and Installation Method".
If install other than standard mounting orientation (A), please fix the power supply for withstand the vibration and impact.
*8 Burst operation at 30% load or less.
*9 Please contact us about DC input voltage.
* To meet the specifications. Do not operate over-loaded condition.
* A sound may occur from power supply at light or peak loading.

Downloaded from Arrow.com.

Block diagram

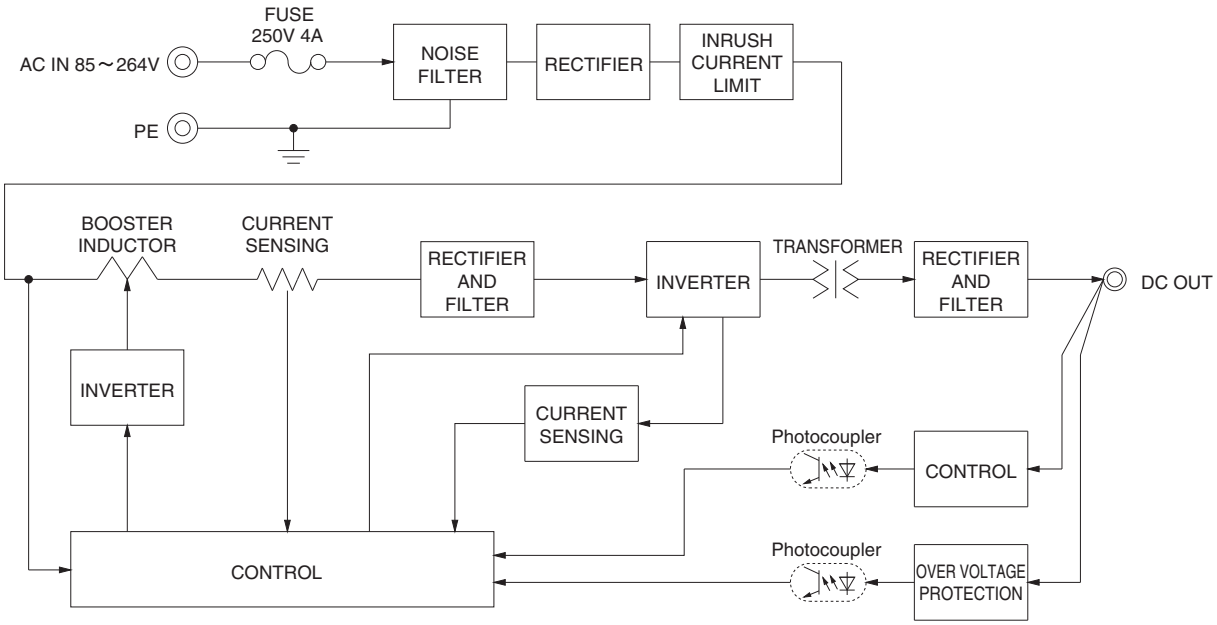

External view

<KLEA120F(Euro Style I/O Terminals)>

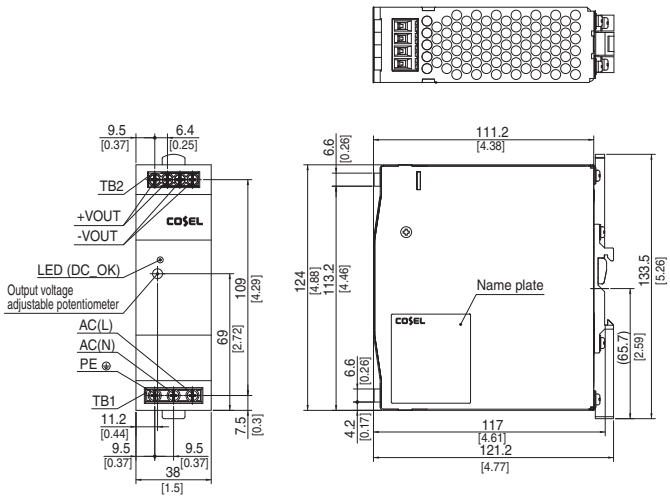

※ Tolerance : ±1.5 [±0.06]
※ Weight : 580g max
※ PCB Material/thickness : FR-4 / 1.6mm [0.06]
※ Chassis material : Aluminum
※ Case material : Stainless steel
※ Din rail attachment material : Aluminum, Stainless steel, Nylon
※ Dimensions in mm, [ ] = inches
※ Screw tightening torque : 1N・m max

<KLNA120F(Barrier Blocks Style I/O Terminals)>

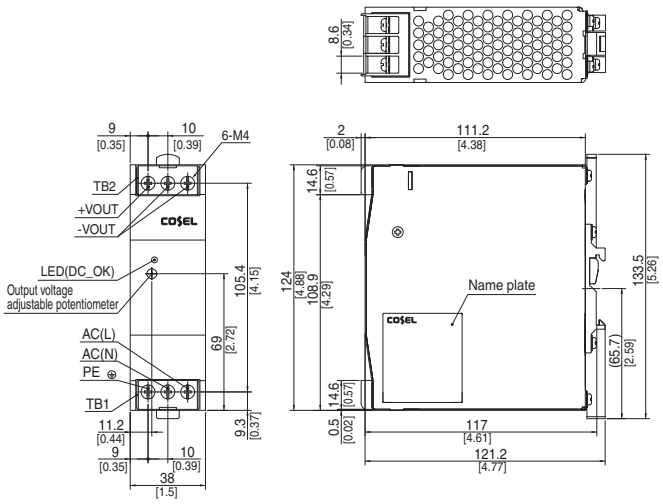

※ Tolerance : ±1.5 [±0.06]
※ Weight : 580g max
※ PCB Material/thickness : FR-4 / 1.6mm [0.06]
※ Chassis material : Aluminum
※ Case material : Stainless steel
※ Din rail attachment material : Aluminum, Stainless steel, Nylon
※ Dimensions in mm, [ ] = inches
※ Screw tightening torque : 1.6N・m max

Downloaded from Arrow.com.

COSEL AC-DC Power Supplies DIN Rail Type

KLEA/KLNA240F

Ordering information

KL□ A 240 F -□□ -□

① ② ③ ④ ⑤ ⑥

①Series name
KLE : Euro Style I/O Terminals
KLN : Barrier Blocks Style I/O Terminals
②Single output
③Output wattage
④Universal input
⑤Output voltage
⑥Option
C : with Coating
N2: Screw mounting

Example recommended EMI/EMC filter
NAC-06-472-D

High voltage pulse noise type : NAP series
Low leakage current type : NAM series
＊A higher current rating EMI/EMC filter may be recommended in view of the other devices that could be connected in parallel with the power supply.

＊Make sure necessary tests will be carried out on your end equipment with the power supply installed in accordance with any required EMC/EMI regulations.

MODEL	KLEA/KLNA240F-24	KLEA/KLNA240F-48
MAX OUTPUT WATTAGE[W]	240	240
DC OUTPUT	24V 10A	48V 5A

SPECIFICATIONS

	MODEL		KLEA/KLNA240F-24	KLEA/KLNA240F-48
INPUT	VOLTAGE[V]		AC85 - 264 1 ϕ (Refer to "Derating") ＊8	
	CURRENT[A]	ACIN 115V	2.4typ	
		ACIN 230V	1.3typ	
	FREQUENCY[Hz]		50 / 60 (45 - 66)	
	EFFICIENCY[%]	ACIN 115V	88typ	
		ACIN 230V	90typ	
	POWER FACTOR	ACIN 115V	0.98typ	
		ACIN 230V	0.90typ	
	INRUSH CURRENT[A] ＊1	ACIN 115V	20typ (Io=100%)(at cold start Ta=25℃)	
		ACIN 230V	40typ (Io=100%)(at cold start Ta=25℃)	
	LEAKAGE CURRENT[mA]		0.45 / 0.75max (ACIN 100V / 240V 60Hz, Io=100%, According to IEC62368-1 and DEN-AN)	
OUTPUT	VOLTAGE[V]		24	48
	CURRENT[A]		10	5
	LINE REGULATION[mV] ＊2		96max	192max
	LOAD REGULATION[mV] ＊2		150max	300max
	RIPPLE[mVp-p] ＊3	0 to +70℃	150max	150max
		-20 - 0℃	240max	240max
	RIPPLE NOISE[mVp-p] ＊3	0 to +70℃	180max	180max
		-20 - 0℃	300max	300max
	TEMPERATURE REGULATION[mV]	0 to +70℃	240max	480max
		-20 to +70℃	290max	600max
	DRIFT[mV] ＊4		96max	192max
	START-UP TIME[ms]		500typ (ACIN 115V, Io=100%)	
	HOLD-UP TIME[ms]		20typ (ACIN 115V, Io=100%)	
	OUTPUT VOLTAGE ADJUSTMENT RANGE[V]		21.60 to 26.40	43.20 to 52.80
	OUTPUT VOLTAGE SETTING[V]		24.00 to 24.96	48.00 to 49.92
PROTECTION CIRCUIT AND OTHERS	OVERCURRENT PROTECTION		Works over 105% of rating and recovers automatically	
	OVERVOLTAGE PROTECTION[V]		27.60 to 33.60	54.00 to 67.20
	DC_OK LAMP		LED (Green)	
ISOLATION	INPUT-OUTPUT		AC3,000V 1minute, Cutoff current = 10mA, DC500V 50MΩ min (At Room Temperature)	
	INPUT-PE		AC2,000V 1minute, Cutoff current = 10mA, DC500V 50MΩ min (At Room Temperature)	
	OUTPUT-PE		AC500V 1minute, Cutoff current = 100mA, DC500V 50MΩ min (At Room Temperature)	
ENVIRONMENT	OPERATING TEMP.,HUMID.AND ALTITUDE		-20 to +70℃, 20 - 90%RH (Non condensing), Type tested for -40℃ start-up (Refer to "Derating")	
	STORAGE TEMP.,HUMID.AND ALTITUDE		-30 to +85℃, 20 - 90%RH (Non condensing)	
	VIBRATION ＊7		10 - 55Hz, 19.6m/s² (2G), 3minutes period, 60 minutes along Z axis (Non operating, mounted on DIN Rail)	
	IMPACT		196.1m/s² (20G), 11ms, once each X, Y and Z axis (Packing state)	
SAFETY AND NOISE REGULATIONS	AGENCY APPROVALS		UL60950-1, C-UL (CSA60950-1), EN62368-1, UL508, Complies with DEN-AN	
	CONDUCTED NOISE		Complies with FCC-B, VCCI-B, CISPR22-B, EN55011-B, EN55022-B	
	HARMONIC ATTENUATOR		Complies with IEC61000-3-2 (Class A) ＊5	
OTHERS	CASE SIZE ＊6		50×124×117mm (W×H×D) [1.97×4.88×4.61 inches]	
	WEIGHT		750g max	
	COOLING METHOD		Convection	

＊1 The value is primary surge. The current of input surge to a built-in EMI/EMC Filter(0.2ms or less)is excluded.
＊2 Please contact us about dynamic load and input response.
＊3 This is the value that measured on measuring board with capacitor of 22μF and 0.1μF at 150mm from output terminal.
Measured by 20MHz oscilloscope or Ripple-Noise meter (Equivalent to KEISOKU-GIKEN: RM103).
Please refer to the instruction manual 1.5.
＊4 Drift is the change in DC output for an eight hour period after a half-hour warm-up at 25℃, with the input voltage held constant at the rated input/output.
＊5 Please contact us about another class.
＊6 Case size contains neither the umbo.
＊7 Only as standard mounting orientation (A). Refer to "Assembling and Installation Method".
If install other than standard mounting orientation (A), please fix the power supply for withstand the vibration and impact.
＊8 Please contact us about DC input voltage.
＊ To meet the specifications. Do not operate over-loaded condition.
＊ A sound may occur from power supply at light or peak loading.

Downloaded from Arrow.com.

Block diagram

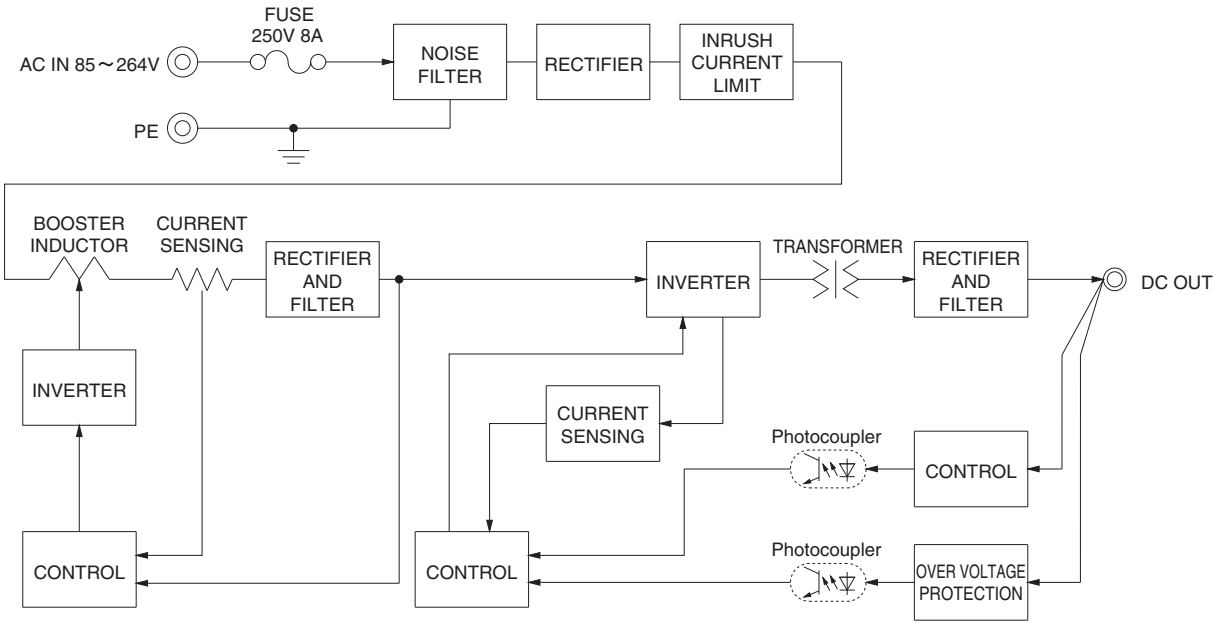

External view

<KLEA240F(Euro Style I/O Terminals)>

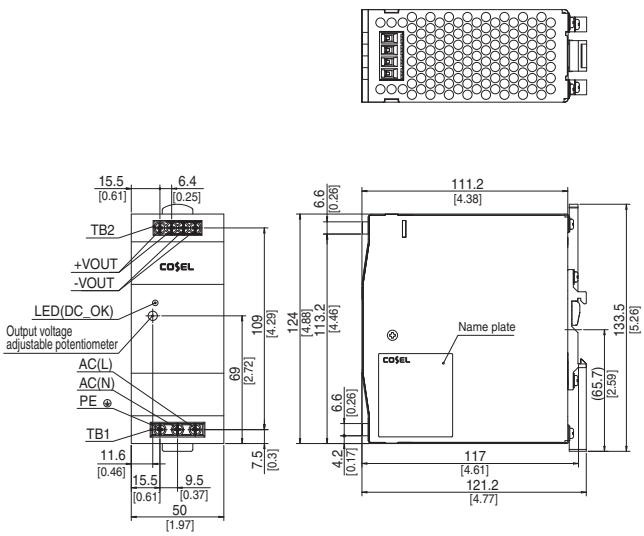

※ Tolerance : ±1.5 [±0.06]
※ Weight : 750g max
※ PCB Material/thickness : FR-4 / 1.6mm [0.06]
※ Chassis material : Aluminum
※ Case material : Stainless steel
※ Din rail attachment material : Aluminum, Stainless steel, Nylon
※ Dimensions in mm, [ ] = inches
※ Screw tightening torque : 1N・m max

<KLNA240F(Barrier Blocks Style I/O Terminals)>

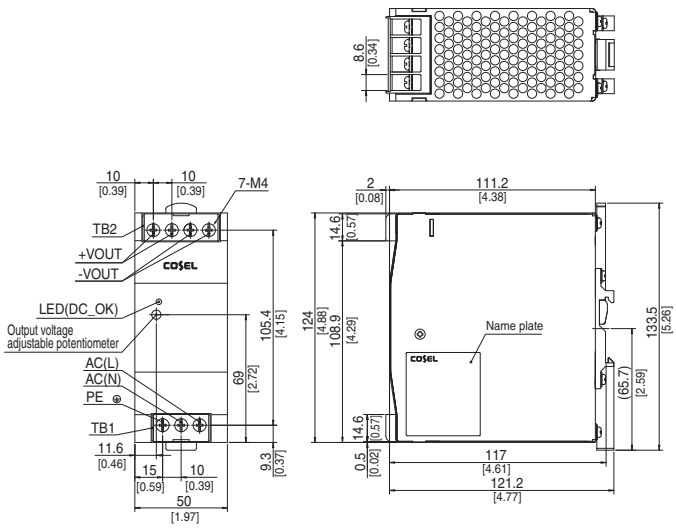

※ Tolerance : ±1.5 [±0.06]
※ Weight : 750g max
※ PCB Material/thickness : FR-4 / 1.6mm [0.06]
※ Chassis material : Aluminum
※ Case material : Stainless steel
※ Din rail attachment material : Aluminum, Stainless steel, Nylon
※ Dimensions in mm, [ ] = inches
※ Screw tightening torque : 1.6N・m max

Downloaded from Arrow.com.

Terminal Blocks

● KLEA120F

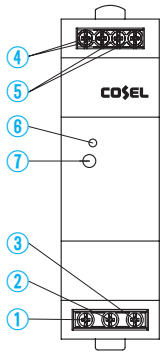

● KLNA120F

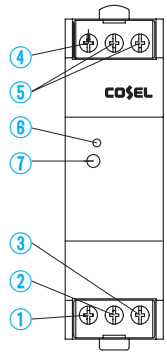

● KLEA240F

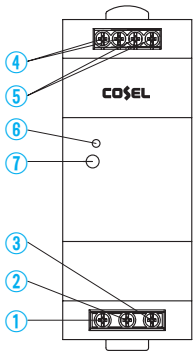

● KLNA240F

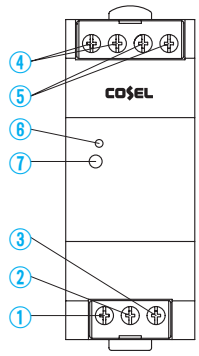

Terminal Number	Terminal Name	Function
①	PE	Protective earth Terminal
②	AC (N)	Input Terminals
③	AC (L)	
④	+VOUT	+Output Terminals
⑤	−VOUT	−Output Terminals
⑥	DC_OK	LED for output voltage confirmation
⑦	TRM	Adjustment of output voltage

Assembling and Installation Method

Installation method

■About DIN-Rail Attachment available with DIN EN60715 TH 35 (35×7.5mm or 35×15mm) (Top hat shaped DIN rail)

■Below shows mounting orientation.
If install other then standard mounting orientation (A), please fix the power supply for withstand the impact and vibration.

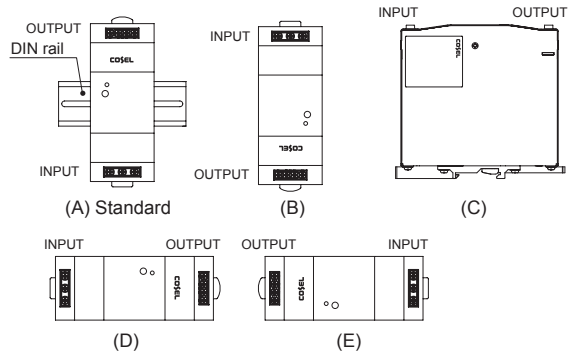

■When you mount a power supply on a DIN rail, have the area marked A catch one side of the rail and push the unit to the direction of B. To remove the power supply from the rail, either push down the area marked C or insert a tool such as driver to the area marked D and pull the unit apart from the rail.
When you couldn't remove the unit easily, push down the area marked C while lightly pushing the unit to the direction of E.

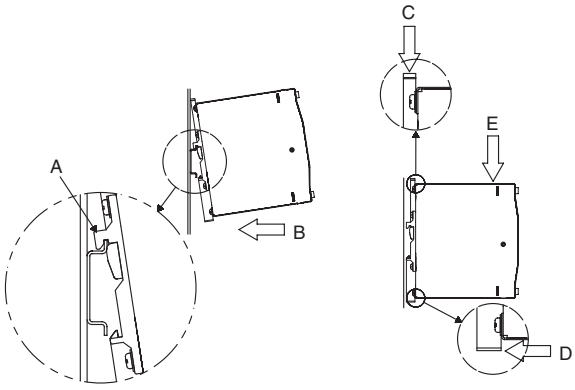

Downloaded from Arrow.com.

Assembling and Installation Method

■Shown below the notes about installation clearance of a unit.

①Installation clearance at above and below the unit.
Please have clearance of at least 25mm above and below the unit to avoid heat accumulation.

②Installation clearance at the side of the unit.
Please have clearance of at least 5mm side the unit to insulating the internal components. However, refer to right figure, if adjacent device of the unit (including power supply) is a heat source.

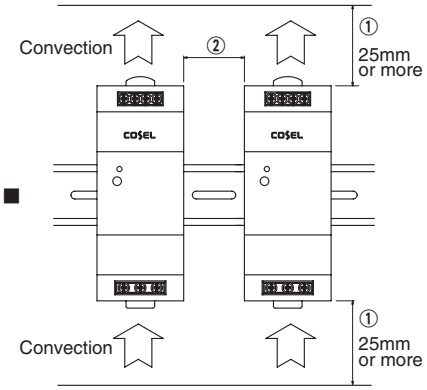

No.	Model	Adjacent device of the unit	
		Non-heat source	Heat source(＊)
1	KLEA120F, KLNA120F	15mm or more	25mm or more
2	KLEA240F, KLNA240F	15mm or more	25mm or more

＊Reference value when same power units are adjacent.

Derating

Derating curve for input voltage

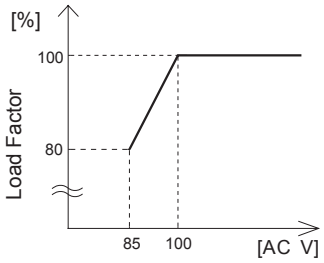

Ambient temperature derating

■The operative ambient temperature as different by input voltage. Derating curve is shown below.
■In the hatched area,the specification of Ripple,Ripple Noise is different from other area.
■Derating Curve (Convection)
■Refer to instruction manual 3 for Ambient temperature measurement point.

● KLEA120F, KLNA120F

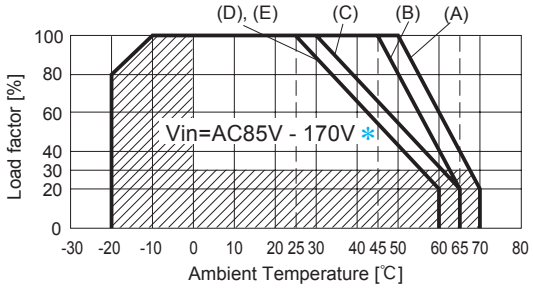

＊ Derating curve depend on input voltage is required.

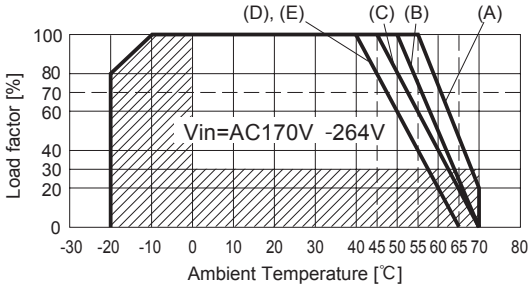

● KLEA240F, KLNA240F

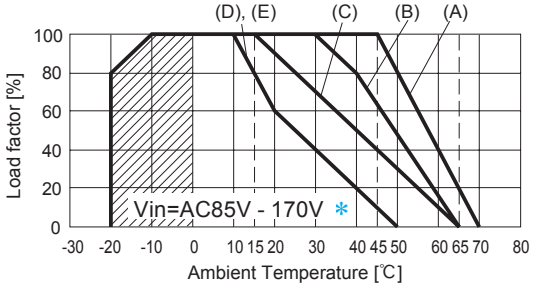

＊ Derating curve depend on input voltage is required.

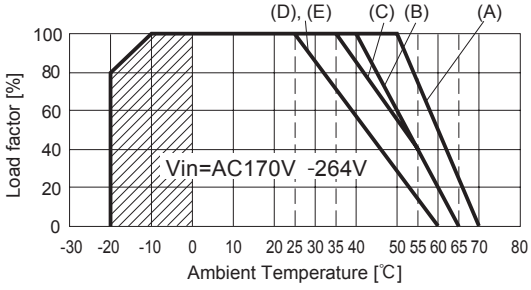

Downloaded from Arrow.com.

Derating

■Derating Curve (Forced air)

■Use the temperature measurement point as shown in instruction manual 3. Please use at the temperature dose not exceed the values in instruction manual 3.

● KLEA120F, KLNA120F

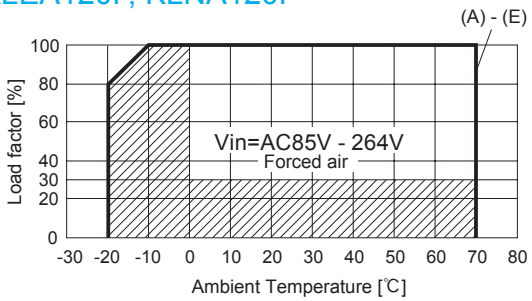

● KLEA240F, KLNA240F

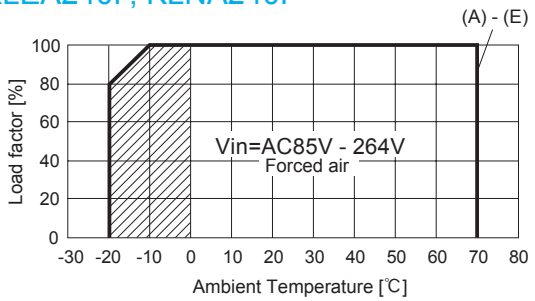

Instruction Manual

◆ It is neccessary to read the “Instruction Manual” and “Before using our product” before you use our product.

Basic Characteristics Data

Model	Circuit method	Switching frequency [KLz]	Input current [A] ＊1	Rated input fuse	Inrush current protection circuit	PCB/Pattern			Series/Parallel operation availability	
						Material	Single sided	Double sided	Series operation	Parallel operation
KLEA120F	Active filter	40 - 160	1.2	250V 4A	Thermistor	FR-4		Yes	Yes	No
KLNA120F	Flyback converter	20 - 150＊2								
KLEA240F	Active filter	50 - 70	2.4	250V 8A	Thermistor	FR-4		Yes	Yes	No
KLNA240F	Forward converter	130								

＊1 The value of input current is at ACIN 115V and 100%.
＊2 Burst operation at light loading, frequency is change by use condition.
Please contact us about detail.

Downloaded from Arrow.com.