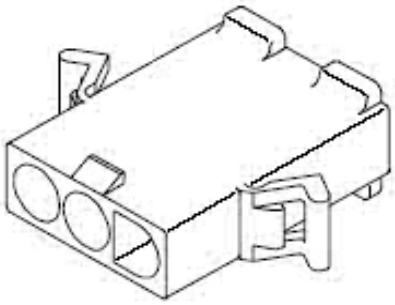

Part Number : 03092161
Product Description : 2.36mm Diameter Standard .093" Pin and Socket Plug Housing without Mounting Ears, Positive Lock, 2 Circuits
Series Number : 42191
Status : Active
Product Category : Connector Housings
Engineering Part Number : 42191-2P1

Documents and Resources

Drawings

003092161_sd.pdf

3D Models and Design Files

STEP AP242

SOLIDWORKS

Creo

Specifications

421910000-PK-000.pdf

PS-02-09-001.pdf

Product Environment Compliance

Compliance

GADSL/IMDS	Not Relevant
China RoHS	per SJ/T 11365-2006
EU ELV	Not Relevant
Low-Halogen Status	Low-Halogen per IEC 61249-2-21
REACH SVHC	Not Contained per D(2025)7771-DC (04 Feb 2026)
EU RoHS	Compliant per EU 2015/863

Compliance Statements

- EU RoHS
- REACH SVHC
- Low-Halogen

Industry Documents

Downloaded from Arrow.com.

- IPC 1752A Class C
- IPC 1752A Class D
- Molex Product Compliance Declaration
- IEC-62474
- chemSHERPA (xml)

Substances of Interest
- PFAS

EU RoHS Certificate of Compliance

Additional Product Compliance Information

Part Details

General

Status	Active
Category	Connector Housings
Series	42191
Description	2.36mm Diameter Standard .093" Pin and Socket Plug Housing without Mounting Ears, Positive Lock, 2 Circuits
Application	Wire-to-Wire
Comments	Glow Wire Equivalent Part Number 50361688; Polarized to Mating Part, without Mounting Ears
Component Type	Plug
Product Name	Standard .093"
UPC	800753818408

Agency

CSA	LR19980
UL	E29179

Physical

Circuits (maximum)	2
Color - Resin	Natural
Gender	Plug
Glow-Wire Capable	No

Downloaded from Arrow.com.

Keying to Mating Part	No
Lock to Mating Part	Yes
Net Weight	1.967/g
Number of Rows	1
Packaging Type	Bag
Panel Mount	No
Pitch - Mating Interface	6.30mm
Pitch - Termination Interface	6.30mm
Polarized to Mating Part	Yes
Ports	0
Stackable	No
Temperature Range - Operating	-55° to +105°C

Solder Process Data

Lead-Free Process Capability	N/A

Mates With / Use With

Mates with Part(s)

Description	Part Number
2.36mm Diameter Standard .093" Pin and Socket Receptacle Housing without Mounting Ears, Positive Lock, 2 Circuits	03091161

Use with Part(s)

Description	Part Number
Standard .093" Pin and Socket Female Crimp Terminals	1189
Standard .093" Pin and Socket Male Crimp Terminals	1190
Standard .093" Pin and Socket Male Crimp Terminals	1380
Standard .093" Pin and Socket Female Crimp Terminals	1381
Standard .093" Pin and Socket Male Crimp Terminal	1434

Downloaded from Arrow.com.

Standard .093" Pin and Socket Male Crimp Grounding Terminals	1973
Standard .093" Pin and Socket Female Crimp Terminal	4550

Downloaded from Arrow.com.