Connector Location A

Connector Location B

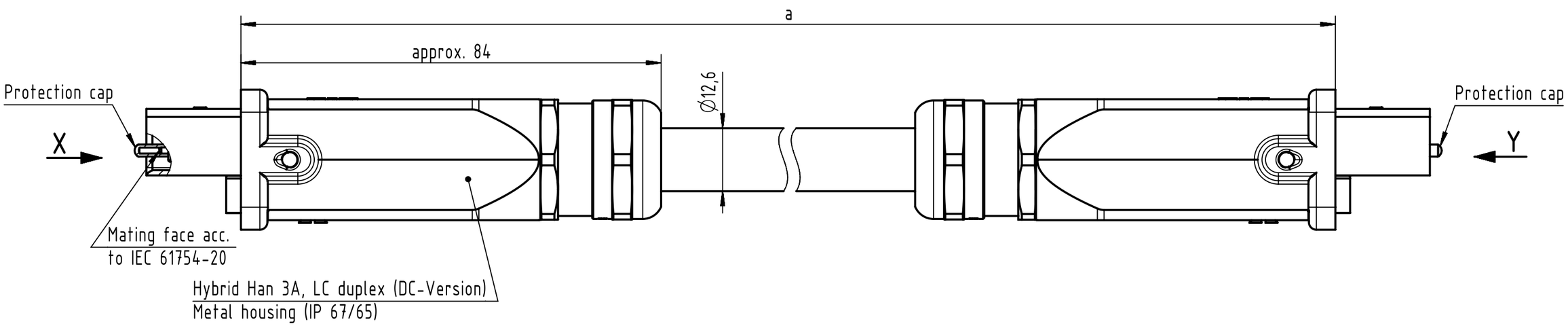

X
male
(without protection cap)

Loading-Plan
(Power DC version)
(Shield not connected)

Y
male
(without protection cap)

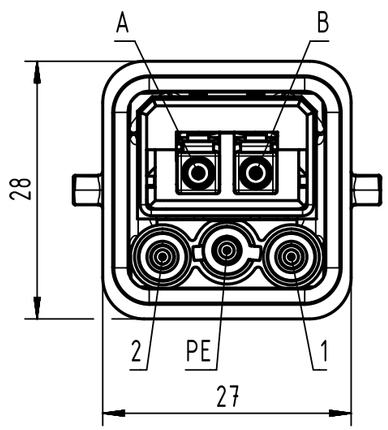

A	Orange	B
B	Blue	A
1	Black	1
2	Blue	2
PE	Green-Yellow	PE

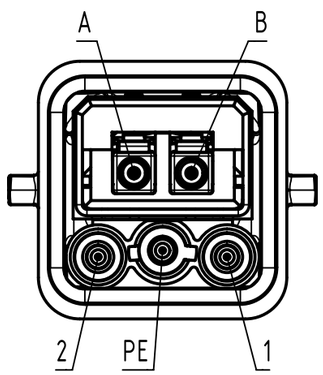

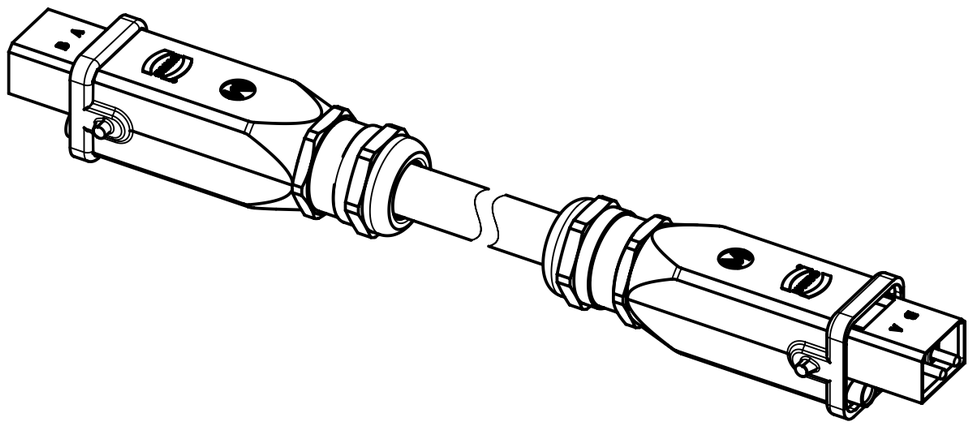

Cont no.	Part-no.	Type of cable	Dim. a (m)
10	33572113005002	Hybrid cable 2xFO MM 50/125 + 3x2.5mm², PVC, black	300
9	33572112005002		200
8	33572111005002		100
7	33572110605002		60
6	33572110505002		50
5	33572110405002		40
4	33572110205002		20
3	33572110105002		10
2	33572110055002		5
1	33572110015002		1

All Dimensions in mm | Tech. Character. | Free size tol. | According to production drawing

All rights reserved

Department HCS - RO

HARTING Customised Solutions
D-32427 Minden

Created by	Inspected by	Standardisation	Date	State
COSTEA	MUNTEANV	AVRAM	2017-11-06	Final Release

Title: Han 3A FO Hybrid Cable Assembly

Doc-Key / ECM-Nr.: 1001833341/UGD/033/C 500000127419

Type: TB | Number: 3357211XXX5002 | Rev.: C | Page: 1/1

A3

Downloaded from Arrow.com.