

Is Now Part of



ON Semiconductor®

To learn more about ON Semiconductor, please visit our website at
www.onsemi.com

Please note: As part of the Fairchild Semiconductor integration, some of the Fairchild orderable part numbers will need to change in order to meet ON Semiconductor's system requirements. Since the ON Semiconductor product management systems do not have the ability to manage part nomenclature that utilizes an underscore (_), the underscore (_) in the Fairchild part numbers will be changed to a dash (-). This document may contain device numbers with an underscore (_). Please check the ON Semiconductor website to verify the updated device numbers. The most current and up-to-date ordering information can be found at www.onsemi.com. Please email any questions regarding the system integration to Fairchild_questions@onsemi.com.

ON Semiconductor and the ON Semiconductor logo are trademarks of Semiconductor Components Industries, LLC dba ON Semiconductor or its subsidiaries in the United States and/or other countries. ON Semiconductor owns the rights to a number of patents, trademarks, copyrights, trade secrets, and other intellectual property. A listing of ON Semiconductor's product/patent coverage may be accessed at www.onsemi.com/site/pdf/Patent-Marking.pdf. ON Semiconductor reserves the right to make changes without further notice to any products herein. ON Semiconductor makes no warranty, representation or guarantee regarding the suitability of its products for any particular purpose, nor does ON Semiconductor assume any liability arising out of the application or use of any product or circuit, and specifically disclaims any and all liability, including without limitation special, consequential or incidental damages. Buyer is responsible for its products and applications using ON Semiconductor products, including compliance with all laws, regulations and safety requirements or standards, regardless of any support or applications information provided by ON Semiconductor. "Typical" parameters which may be provided in ON Semiconductor data sheets and/or specifications can and do vary in different applications and actual performance may vary over time. All operating parameters, including "Typicals" must be validated for each customer application by customer's technical experts. ON Semiconductor does not convey any license under its patent rights nor the rights of others. ON Semiconductor products are not designed, intended, or authorized for use as a critical component in life support systems or any FDA Class 3 medical devices or medical devices with a same or similar classification in a foreign jurisdiction or any devices intended for implantation in the human body. Should Buyer purchase or use ON Semiconductor products for any such unintended or unauthorized application, Buyer shall indemnify and hold ON Semiconductor and its officers, employees, subsidiaries, affiliates, and distributors harmless against all claims, costs, damages, and expenses, and reasonable attorney fees arising out of, directly or indirectly, any claim of personal injury or death associated with such unintended or unauthorized use, even if such claim alleges that ON Semiconductor was negligent regarding the design or manufacture of the part. ON Semiconductor is an Equal Opportunity/Affirmative Action Employer. This literature is subject to all applicable copyright laws and is not for resale in any manner.

Downloaded from Arrow.com.

FAIRCHILD SEMICONDUCTOR®

October 1995
Revised February 2005

74LCX38
Low Voltage Quad 2-Input NAND Gate (Open Drain) with 5V Tolerant Inputs

General Description

The LCX38 contains four 2-input open drain NAND gates. The inputs tolerate voltages up to 7V allowing the interface of 5V systems to 3V systems.

The 74LCX38 is fabricated with advanced CMOS technology to achieve high speed operation while maintaining CMOS low power dissipation.

Features

- 5V tolerant inputs
- 2.3V to 3.6V V_{CC} specifications provided
- 5.0 ns t_{PD} max (V_{CC} = 3.3V), 10 μA I_{CC} max
- Power down high impedance inputs and outputs
- 24 mA output drive (V_{CC} = 3.0V)
- Implements proprietary noise/EMI reduction circuitry
- Latch-up performance exceeds 500 mA
- ESD performance:
  - Human body model > 2000V
  - Machine model > 150V

Ordering Code:

Order Number	Package Number	Package Description
74LCX38M	M14A	14-Lead Small Outline Integrated Circuit (SOIC), JEDEC MS-012, 0.150" Narrow
74LCX38MX_NL (Note 1)	M14A	Pb-Free 14-Lead Small Outline Integrated Circuit (SOIC), JEDEC MS-012, 0.150" Narrow
74LCX38SJ	M14D	Pb-Free 14-Lead Small Outline Package (SOP), EIAJ TYPE II, 5.3mm Wide
74LCX38MTC	MTC14	14-Lead Thin Shrink Small Outline Package (TSSOP), JEDEC MO-153, 4.4mm Wide
74LCX38MTCX_NL (Note 1)	MTC14	Pb-Free 14-Lead Thin Shrink Small Outline Package (TSSOP), JEDEC MO-153, 4.4mm Wide

Devices also available in Tape and Reel. Specify by appending the suffix letter "X" to the ordering code.
Pb-Free package per JEDEC J-STD-020B.

Note 1: "_NL" indicates Pb-Free package (per JEDEC J-STD-020B). Device available in Tape and Reel only.

Logic Symbol

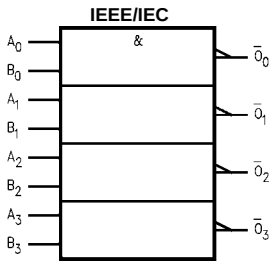

Connection Diagram

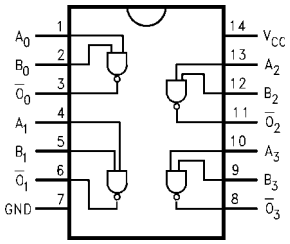

Pin Descriptions

Pin Names	Description
A_n, B_n	Inputs
$\overline{O}_n$	Outputs

© 2005 Fairchild Semiconductor Corporation

Downloaded from Arrow.com.

Absolute Maximum Ratings(Note 2)

Symbol	Parameter	Value	Conditions	Units
V_{CC}	Supply Voltage	−0.5 to +7.0		V
V_I	DC Input Voltage	−0.5 to +7.0		V
V_O	DC Output Voltage	−0.5 to +7.0	Output in HIGH or LOW State (Note 3)	V
I_{IK}	DC Input Diode Current	−50	V_I < GND	mA
I_{OK}	DC Output Diode Current	−50	V_O < GND	mA
I_O	DC Output Sink Current (I_{OL})	+50		mA
I_{CC}	DC Supply Current per Supply Pin	±100		mA
I_{GND}	DC Ground Current per Ground Pin	±100		mA
T_{STG}	Storage Temperature	−65 to +150		°C

Recommended Operating Conditions (Note 4)

Symbol	Parameter		Min	Max	Units
V_{CC}	Supply Voltage	Operating	2.0	3.6	V
		Data Retention	1.5	3.6	
V_I	Input Voltage		0	5.5	V
V_O	Output Voltage		0	5.5	V
I_{OL}	Output Current	V_{CC} = 3.0V – 3.6V		24	mA
		V_{CC} = 2.7V – 3.0V		12	
		V_{CC} = 2.3V – 2.7V		8	
T_A	Free-Air Operating Temperature		−40	85	°C
$\Delta t/\Delta V$	Input Edge Rate, V_{IN} = 0.8V–2.0V, V_{CC} = 3.0V		0	10	ns/V

Note 2: The Absolute Maximum Ratings are those beyond which the safety of the device cannot be guaranteed. The device should not be operating at these limits. The parametric values defined in the Electrical Characteristics tables are not guaranteed at the Absolute Maximum Ratings. The "Recommended Operating Conditions" table will define the conditions for actual device operation.

Note 3: I_O Absolute Maximum Rating must be observed.

Note 4: Unused inputs must be held HIGH or LOW. They may not float.

DC Electrical Characteristics

Symbol	Parameter	Conditions	V_{CC} (V)	T_A = −40°C to +85°C		Units
				Min	Max	
V_{IH}	HIGH Level Input Voltage		2.3 – 2.7	1.7		V
			2.7 – 3.6	2.0		
V_{IL}	LOW Level Input Voltage		2.3 – 2.7		0.7	V
			2.3 – 3.6		0.8	
V_{OL}	LOW Level Output Voltage	I_{OL} = 100μA	2.3 – 3.6		0.2	V
		I_{OL} = 8mA	2.3		0.6	
		I_{OL} = 12 mA	2.7		0.4	
		I_{OL} = 16 mA	3.0		0.4	
		I_{OL} = 24 mA	3.0		0.55	
I_I	Input Leakage Current	0 ≤ V_I ≤ 5.5V	2.3 – 3.6		±5.0	μA
I_{OFF}	Power-Off Leakage Current	V_I or V_O = 5.5V	0		10	μA
I_{CC}	Quiescent Supply Current	V_I = V_{CC} or GND	2.3 – 3.6		10	μA
		3.6V ≤ V_I ≤ 5.5V	2.3 – 3.6		±10	
ΔI_{CC}	Increase in I_{CC} per Input	V_{IH} = V_{CC} −0.6V	2.3 – 3.6		500	μA
I_{OHZ}	Off State Current	V_O = 5.5	2 - 3.6		10	μA

Downloaded from Arrow.com.

AC Electrical Characteristics

Symbol	Parameter	$T_A = -40°C$ to $+85°C$, $R_L = 500\ \Omega$						Units
		$V_{CC} = 3.3V \pm 0.3V$		$V_{CC} = 2.7V$		$V_{CC} = 2.5V \pm 0.2V$		
		$C_L = 50$ pF		$C_L = 50$ pF		$C_L = 30$ pF		
		Min	Max	Min	Max	Min	Max	
t_{PZL}	Propagation Delay Time	1.5	5.0	1.5	5.5	1.5	6.5	ns
t_{PLZ}		1.5	5.0	1.5	5.5	1.5	6.0	
t_{OSHL}	Output to Output Skew		1.0					ns
t_{OSLH}	(Note 5)		1.0					

Note 5: Skew is defined as the absolute value of the difference between the actual propagation delay for any two separate outputs of the same device. The specification applies to any outputs switching in the same direction, either HIGH-to-LOW (t_{OSHL}) or LOW-to-HIGH (t_{OSLH}).

Dynamic Switching Characteristics

Symbol	Parameter	Conditions	V_{CC} (V)	$T_A = 25°C$ Typical	Units
V_{OLP}	Quiet Output Dynamic Peak V_{OL}	$C_L = 50$ pF, $V_{IH} = 3.3V$, $V_{IL} = 0V$	3.3	0.8	V
		$C_L = 30$ pF, $V_{IH} = 2.5V$, $V_{IL} = 0V$	2.5	0.6	
V_{OLV}	Quiet Output Dynamic Valley V_{OL}	$C_L = 50$ pF, $V_{IH} = 3.3V$, $V_{IL} = 0V$	3.3	−0.8	V
		$C_L = 30$ pF, $V_{IH} = 2.5V$, $V_{IL} = 0V$	2.5	−0.6	

Capacitance

Symbol	Parameter	Conditions	Typical	Units
C_{IN}	Input Capacitance	V_{CC} = Open, $V_I = 0V$ or V_{CC}	7	pF
C_{OUT}	Output Capacitance	$V_{CC} = 3.3V$, $V_I = 0V$ or V_{CC}	8	pF
C_{PD}	Power Dissipation Capacitance	$V_{CC} = 3.3V$, $V_I = 0V$ or V_{CC}, f = 10 MHz	25	pF

Downloaded from Arrow.com.

AC Loading and Waveforms Generic for LCX Family

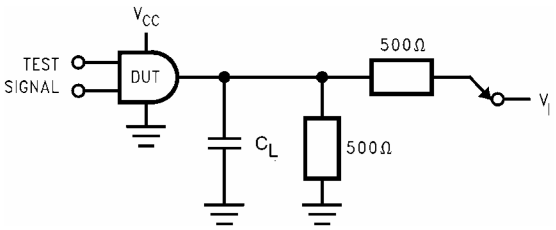

FIGURE 1. AC Test Circuit
(C_L includes probe and jig capacitance)

Test	Switch
t_{PZL}, t_{PLZ}	6V at V_{CC} = 3.3 ± 0.3V V_{CC} x 2 at V_{CC} = 2.5 ± 0.2V

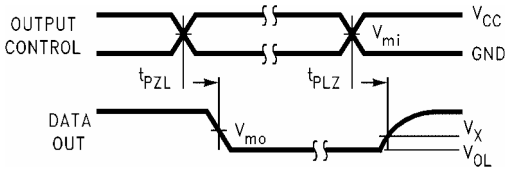

3-STATE Output Low Enable and Disable Times for Logic

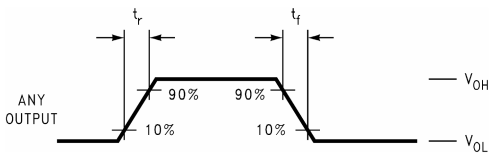

t_{rise} and t_{fall}

FIGURE 2. Waveforms
(Input Pulse Characteristics; f = 1MHz, t_r = t_f = 3ns)

Symbol	V_{CC}		
	3.3V ± 0.3V	**2.7V**	**2.5V ± 0.2V**
V_{mi}	1.5V	1.5V	V_{CC}/2
V_{mo}	1.5V	1.5V	V_{CC}/2
V_x	V_{OL} + 0.3V	V_{OL} + 0.3V	V_{OL} + 0.15V
V_y	V_{OH} − 0.3V	V_{OH} − 0.3V	V_{OH} − 0.15V

Downloaded from Arrow.com.

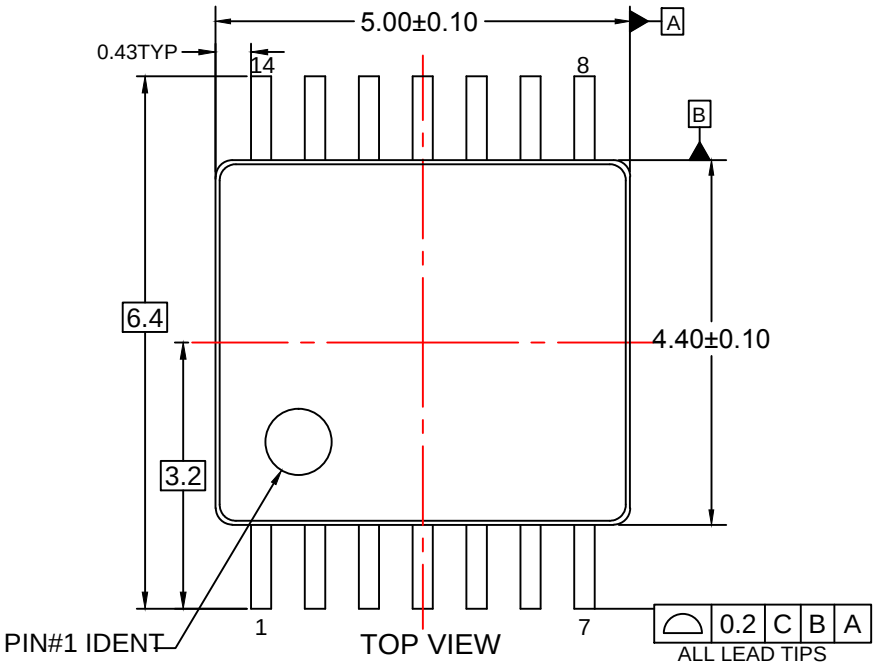

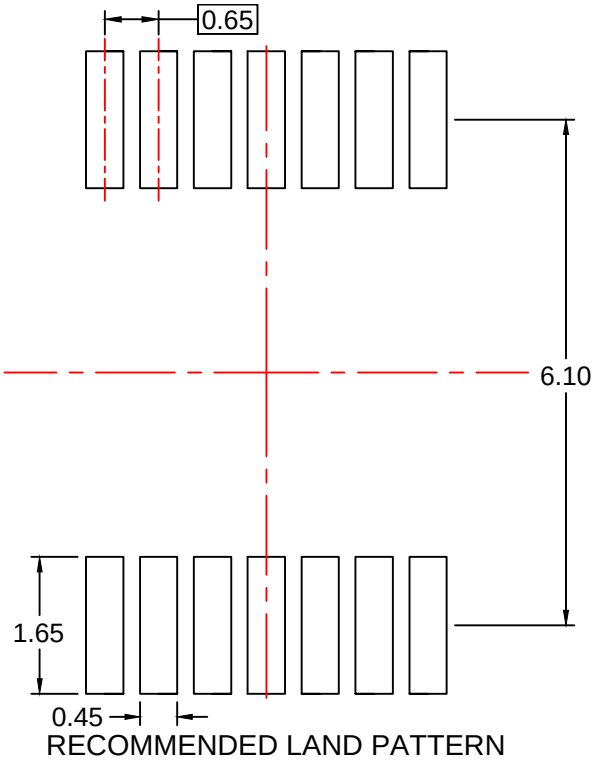

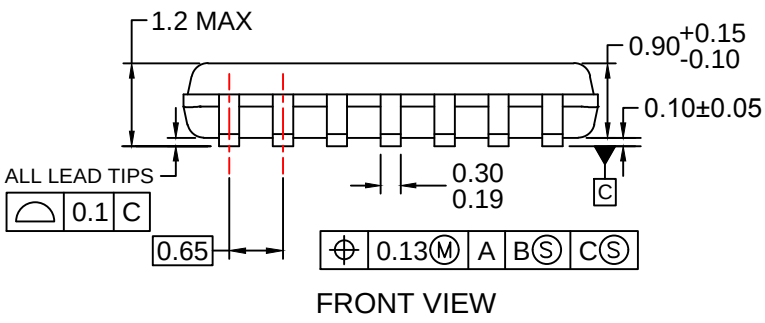

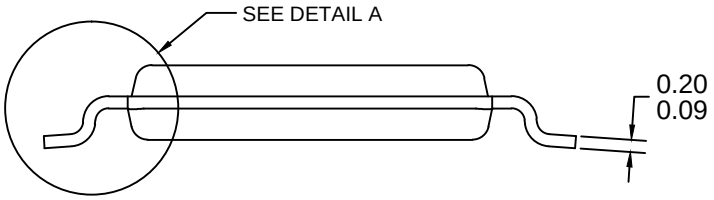

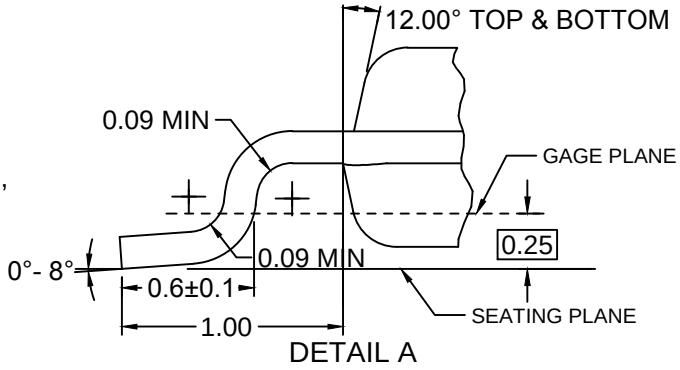

NOTES:

A. CONFORMS TO JEDEC REGISTRATION MO-153, VARIATION AB, REF NOTE 6

B. DIMENSIONS ARE IN MILLIMETERS.

C. DIMENSIONS ARE EXCLUSIVE OF BURRS, MOLD FLASH, AND TIE BAR EXTRUSIONS

D. DIMENSIONING AND TOLERANCES PER ANSI Y14.5M, 2009.

E. LANDPATTERN STANDARD: SOP65P640X110-14M.

F. DRAWING FILE NAME: MKT-MTC14rev7.

FAIRCHILD.

Downloaded from Arrow.com.

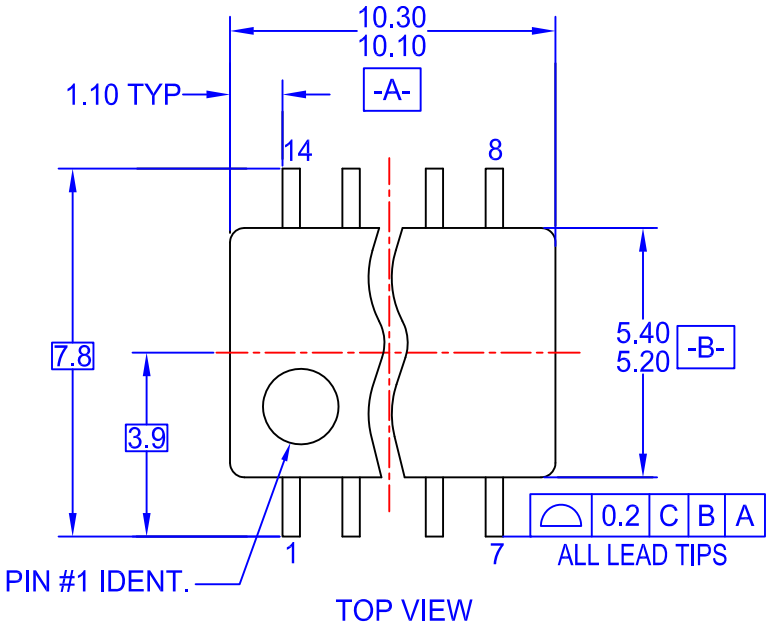

TOP VIEW

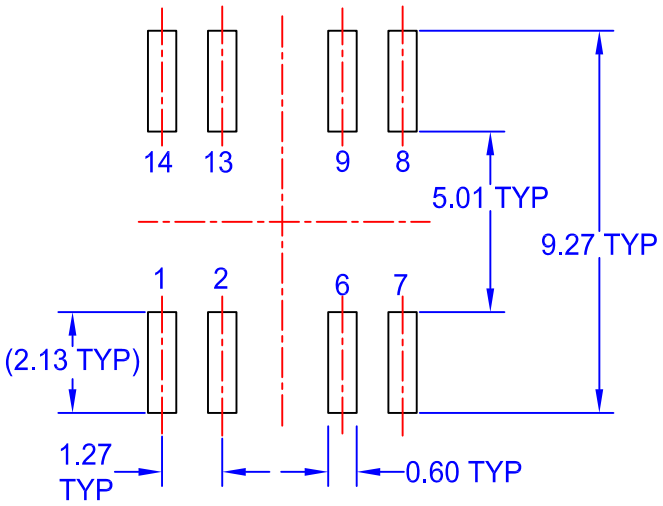

LAND PATTERN RECOMMENDATION

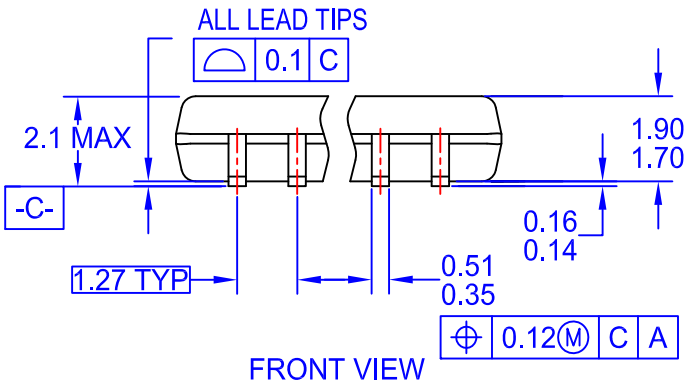

FRONT VIEW

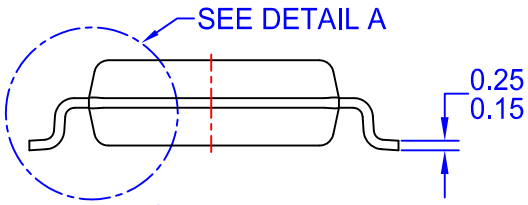

SIDE VIEW

NOTES:

A. CONFORMS TO EIAJ EDR-7320 REGISTRATION, ESTABLISHED IN DECEMBER, 1998.
B. DIMENSIONS ARE IN MILLIMETERS.
C. DIMENSIONS ARE EXCLUSIVE OF BURRS, MOLD FLASH, AND TIE BAR EXTRUSIONS.
D. DRAWING FILENAME: MKT-M14Drev4.

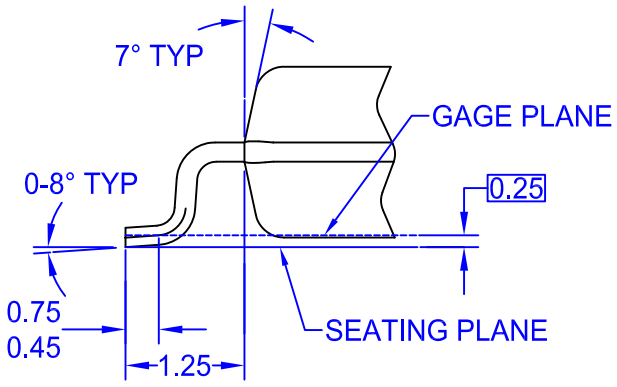

DETAIL A

FAIRCHILD ™

Downloaded from Arrow.com.

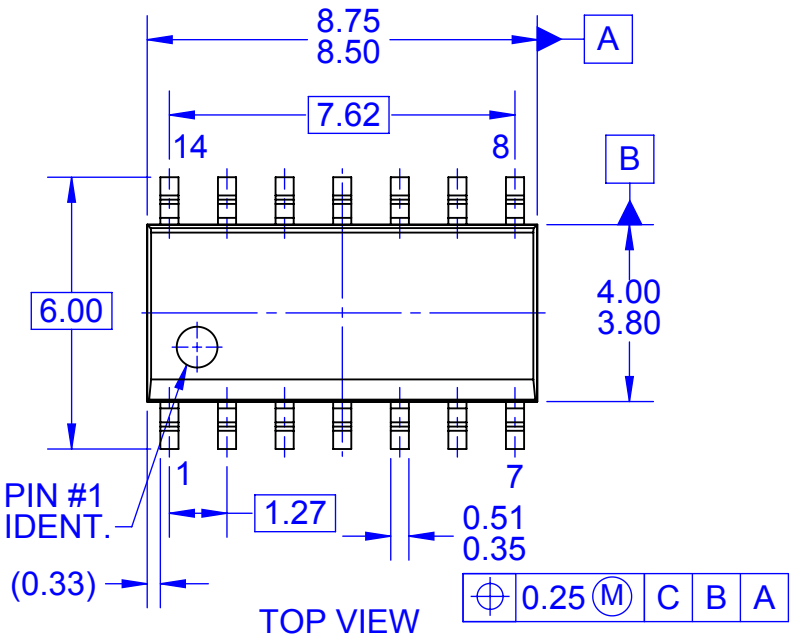

TOP VIEW

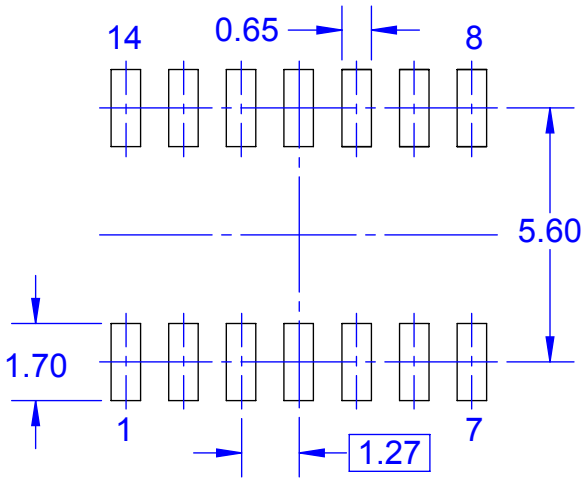

LAND PATTERN RECOMMENDATION

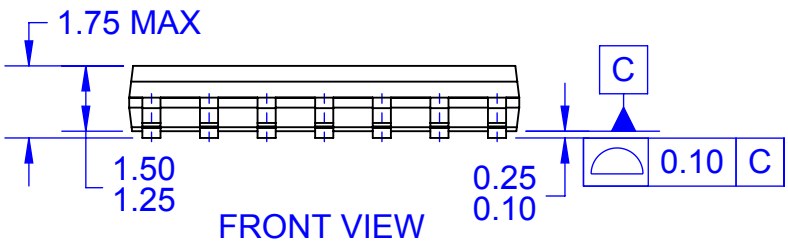

FRONT VIEW

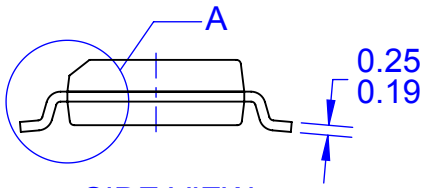

SIDE VIEW

NOTES:

A. CONFORMS TO JEDEC MS-012, VARIATION AB, ISSUE C
B. ALL DIMENSIONS ARE IN MILLIMETERS
C. DIMENSIONS DO NOT INCLUDE MOLD FLASH OR BURRS
D. LAND PATTERN STANDARD: SOIC127P600X145-14M
E. CONFORMS TO ASME Y14.5M, 2009
D. DRAWING FILENAME: MKT-M14Arev14

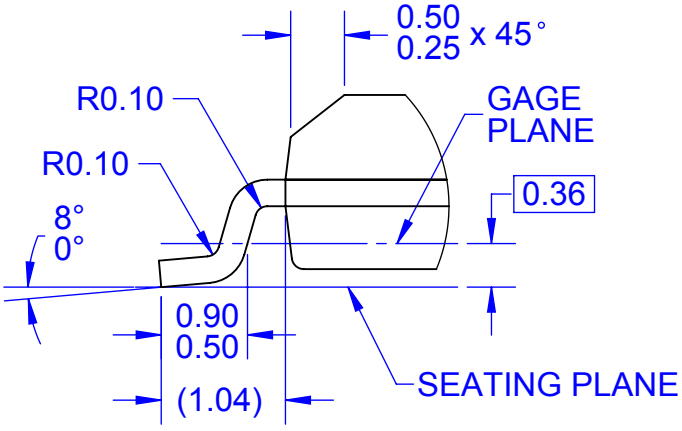

DETAIL A
SCALE 16 : 1

FAIRCHILD ™

Downloaded from Arrow.com.

ON Semiconductor and ON are trademarks of Semiconductor Components Industries, LLC dba ON Semiconductor or its subsidiaries in the United States and/or other countries. ON Semiconductor owns the rights to a number of patents, trademarks, copyrights, trade secrets, and other intellectual property. A listing of ON Semiconductor's product/patent coverage may be accessed at www.onsemi.com/site/pdf/Patent−Marking.pdf. ON Semiconductor reserves the right to make changes without further notice to any products herein. ON Semiconductor makes no warranty, representation or guarantee regarding the suitability of its products for any particular purpose, nor does ON Semiconductor assume any liability arising out of the application or use of any product or circuit, and specifically disclaims any and all liability, including without limitation special, consequential or incidental damages. Buyer is responsible for its products and applications using ON Semiconductor products, including compliance with all laws, regulations and safety requirements or standards, regardless of any support or applications information provided by ON Semiconductor. "Typical" parameters which may be provided in ON Semiconductor data sheets and/or specifications can and do vary in different applications and actual performance may vary over time. All operating parameters, including "Typicals" must be validated for each customer application by customer's technical experts. ON Semiconductor does not convey any license under its patent rights nor the rights of others. ON Semiconductor products are not designed, intended, or authorized for use as a critical component in life support systems or any FDA Class 3 medical devices or medical devices with a same or similar classification in a foreign jurisdiction or any devices intended for implantation in the human body. Should Buyer purchase or use ON Semiconductor products for any such unintended or unauthorized application, Buyer shall indemnify and hold ON Semiconductor and its officers, employees, subsidiaries, affiliates, and distributors harmless against all claims, costs, damages, and expenses, and reasonable attorney fees arising out of, directly or indirectly, any claim of personal injury or death associated with such unintended or unauthorized use, even if such claim alleges that ON Semiconductor was negligent regarding the design or manufacture of the part. ON Semiconductor is an Equal Opportunity/Affirmative Action Employer. This literature is subject to all applicable copyright laws and is not for resale in any manner.

PUBLICATION ORDERING INFORMATION

LITERATURE FULFILLMENT:
Literature Distribution Center for ON Semiconductor
19521 E. 32nd Pkwy, Aurora, Colorado 80011 USA
Phone: 303−675−2175 or 800−344−3860 Toll Free USA/Canada
Fax: 303−675−2176 or 800−344−3867 Toll Free USA/Canada
Email: orderlit@onsemi.com

N. American Technical Support: 800−282−9855 Toll Free USA/Canada
Europe, Middle East and Africa Technical Support:
Phone: 421 33 790 2910
Japan Customer Focus Center
Phone: 81−3−5817−1050

ON Semiconductor Website: **www.onsemi.com**

Order Literature: http://www.onsemi.com/orderlit

For additional information, please contact your local Sales Representative

Downloaded from Arrow.com.