REVISIONS					
REV	ECO	DESCRIPTION	DATE	BY	APPR
B1	-	RELEASED DRAWING	JUN-25-2014	BEN	TOMMY
B2	-	UPDATE RATED VOLTAGE	JAN-30-2023	JUN	TOMMY

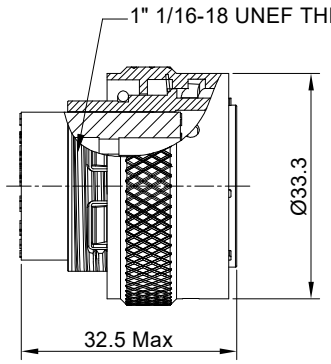

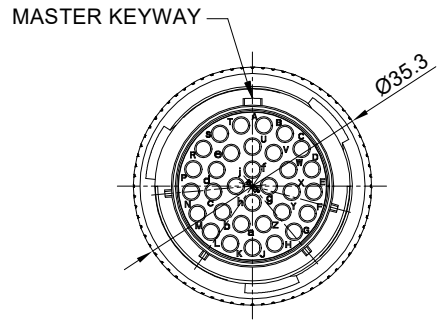

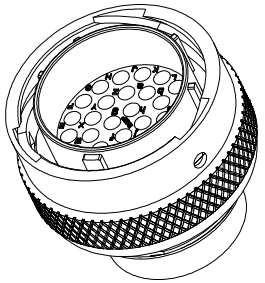

NOTES: (UNLESS OTHERWISE SPECIFIED)
1. MATERIAL:
   SHELL: ZINC ALLOY, NICKEL PLATED.
   INSERT: THERMOPLASTIC, UL94 V-0.
   COUPLING NUT: AL ALLOY, NICKEL PLATED.
   WAVE WASHER: STAINLESS STEEL.
   O-RING: NBR/SILICONE RUBBER.
2. SPECIFICATIONS:
   2.1 RATED CURRENT:
      2.1.1 STAMPED CONTACT: 5A (MAX).
      2.1.2 MACHINED CONTACT : 7.5A (MAX).
   (B2) 2.2 RATED VOLTAGE: 250V (AC/DC).
   2.3 OPERATING TEMPERATURE: SEE CHART.
   2.4 DIELECTRIC WITHSTANDINGVOLTAGE: LESS THAN
      2 MILLIAMPS CURRENT LEAKAGE@1500 VOLTS AC.
   2.5 INSULATION RESISTANCE: 5000 MEGOHMS MIN.
   2.6 IP--CLASS: IP67.
   2.7 MATING CYCLES DURABILITY: 500 CYCLES MIN.
   2.8 ROHS COMPLIANT.
3. SUITABLE CONTACTS : 20# CONTACTS.
4. ALL DIMENSIONS ARE FOR REFERENCE USE ONLY.

KEY POS	PART NUMBER	
	-40°C ~ 105°C	-40°C ~ 125°C
N	RT0W61832PNH	RT0W61832PNH03
W	RT0W61832PWH	RT0W61832PWH03
X	RT0W61832PXH	RT0W61832PXH03
Y	RT0W61832PYH	RT0W61832PYH03
Z	RT0W61832PZH	RT0W61832PZH03

	SEE PART NUMBER CHART		
QUANTITY	PART NUMBER	DESCRIPTION	ITEM

MATERIALS LIST

UNLESS OTHERWISE SPECIFIED
1) All dimensions are in metric(mm).
2) Tolerances are as follows:
1 PL DEC ±0.30 | Fractions ±1/64
2 PL DEC ±0.15 | Angles ±1°
3 PL DEC ±0.08
3) Note reference = X

MATERIAL SPECIFICATIONS:

PROCESS SPECIFICATIONS:

NEXT ASS'Y:

SIGNATURES		DATE
DRAWN:	JUN	JAN-30-2023
CHECKED:	ORION	FEB-1-2023
ENGINEER:		
APPROVAL:	TOMMY	FEB-3-2023
CUSTOMER:		

THIS DRAWING IS SUPPLIED FOR INFORMATION ONLY. DESIGN FEATURES, SPECIFICATIONS AND PERFORMANCE DATA SHOWN HEREON ARE THE PROPERTY OF THE AMPHENOL CORPORATION. NO RIGHTS OF REPRODUCTION ARE IMPLIED. ALL DIMENSIONS ARE SUBJECT TO NORMAL MANUFACTURING VARIATIONS.

Amphenol
Sine Systems - www.amphenol-sine.com
44724 Morley Drive
Clinton Township, MI 48036

ECO-MATE,PLUG,
SIZE 18,32POS,PIN.

SIZE	TYPE	DWG NO:	REVISION
B	C-	RT0W61832P*H*	B2

SCALE: NONE SHEET 1 OF 1

TITLE: ECO-MATE,PLUG, SIZE 18,32POS,PIN.
DWG NO: RT0W61832P*H*
REV: B2
SH: 1
OF: 1

Downloaded from Arrow.com.

ecomate® RM/RSSM/Aquarius™ - Contact Size 20 Options

Crimp Contacts, Machined				
Part Number		AWG	Wire Range (mm²)	Plating
Male	Female			
MP20W23F	MS20W23F	22-20	0.34-0.50	Gold Flash
MP20W23G5	MS20W23G5	22-20	0.34-0.50	Gold 5µ"
MP20W23G10	MS20W23G10	22-20	0.34-0.50	Gold 10µ"
MP20W23G15	MS20W23G15	22-20	0.34-0.50	Gold 15µ"
MP20W23G30	MS20W23G30	22-20	0.34-0.50	Gold 30µ"
MP24W23F	MS24W23F	26-24	0.13-0.25	Gold Flash
MP24W23G5	MS24W23G5	26-24	0.13-0.25	Gold 5µ"
MP24W23G10	MS24W23G10	26-24	0.13-0.25	Gold 10µ"
MP24W23G15	MS24W23G15	26-24	0.13-0.25	Gold 15µ"
MP24W23G30	MS24W23G30	26-24	0.13-0.25	Gold 30µ"
MP28W23F	MS28W23F	30-28	0.05-0.08	Gold Flash
MP28W23G5	MS28W23G5	30-28	0.05-0.08	Gold 5µ"
MP28W23G10	MS28W23G10	30-28	0.05-0.08	Gold 10µ"
MP28W23G15	MS28W23G15	30-28	0.05-0.08	Gold 15µ"
MP28W23G30	MS28W23G30	30-28	0.05-0.08	Gold 30µ"

Crimp Contacts, Stamped & Formed				
Part Number		AWG	Wire Range (mm²)	Plating
Male	Female			
SP20W2F	SS20W2F	22-20	0.34-0.50	Gold Flash
SP20W2G5	SS20W2G5	22-20	0.34-0.50	Gold 5µ"
SP20W2G10	SS20W2G10	22-20	0.34-0.50	Gold 10µ"
SP20W2G15	SS20W2G15	22-20	0.34-0.50	Gold 15µ"
SP20W2G30	SS20W2G30	22-20	0.34-0.50	Gold 30µ"
SP24W2F	SS24W2F	26-24	0.14-0.25	Gold Flash
SP24W2G5	SS24W2G5	26-24	0.14-0.25	Gold 5µ"
SP24W2G10	SS24W2G10	26-24	0.14-0.25	Gold 10µ"
SP24W2G15	SS24W2G15	26-24	0.14-0.25	Gold 15µ"
SP24W2G30	SS24W2G30	26-24	0.14-0.25	Gold 30µ"
SP28W2F	SS28W2F	30-28	0.05-0.08	Gold Flash
SP28W2G5	SS28W2G5	30-28	0.05-0.08	Gold 5µ"
SP28W2G10	SS28W2G10	30-28	0.05-0.08	Gold 10µ"
SP28W2G15	SS28W2G15	30-28	0.05-0.08	Gold 15µ"
SP28W2G30	SS28W2G30	30-28	0.05-0.08	Gold 30µ"

Tooling, Machined	
Part Number	Description
QXRT20	Contact Extraction Tool, #20 (Ø 1.0) Contact
MFX-3959	Hand Crimp Tool for Machined Contacts
MFX-3960	Pneumatic Crimp Tool for Machined Contact

Tooling, Stamped & Formed	
Part Number	Description
QXRT20	Contact Extraction Tool, #20 (Ø 1.0) Contact
MFX-3958	Hand Tool, Stamped & Formed Contact, Size 20, 20-28AWG
MFX-3957	Crimp Die for Stamped & Formed Contact

Plating Options, All	
Symbol	Plating
T	Tin Plated (for Stamped & Formed Contacts)
S	Silver Plated 5Um (for Machined Contacts)
F	Gold Plated
G5	Gold Plated (Thickness 5µ")
G10	Gold Plated (Thickness 10µ")
G15	Gold Plated (Thickness 15µ")
G30	Gold Plated (Thickness 30µ")

Misc Tooling, All	
Part Number	Description
CA-4020-59	Sealing Plug, Size 16 & 20

Standard Quantity Order Options	
Machined	Stamped & Formed
Bulk Package, 500 Pieces	Reel, 3000 Pieces

Downloaded from Arrow.com.