FAIRCHILD™

Is Now Part of

ON

ON Semiconductor®

To learn more about ON Semiconductor, please visit our website at
www.onsemi.com

Please note: As part of the Fairchild Semiconductor integration, some of the Fairchild orderable part numbers will need to change in order to meet ON Semiconductor's system requirements. Since the ON Semiconductor product management systems do not have the ability to manage part nomenclature that utilizes an underscore (_), the underscore (_) in the Fairchild part numbers will be changed to a dash (-). This document may contain device numbers with an underscore (_). Please check the ON Semiconductor website to verify the updated device numbers. The most current and up-to-date ordering information can be found at www.onsemi.com. Please email any questions regarding the system integration to Fairchild_questions@onsemi.com.

ON Semiconductor and the ON Semiconductor logo are trademarks of Semiconductor Components Industries, LLC dba ON Semiconductor or its subsidiaries in the United States and/or other countries. ON Semiconductor owns the rights to a number of patents, trademarks, copyrights, trade secrets, and other intellectual property. A listing of ON Semiconductor's product/patent coverage may be accessed at www.onsemi.com/site/pdf/Patent-Marking.pdf. ON Semiconductor reserves the right to make changes without further notice to any products herein. ON Semiconductor makes no warranty, representation or guarantee regarding the suitability of its products for any particular purpose, nor does ON Semiconductor assume any liability arising out of the application or use of any product or circuit, and specifically disclaims any and all liability, including without limitation special, consequential or incidental damages. Buyer is responsible for its products and applications using ON Semiconductor products, including compliance with all laws, regulations and safety requirements or standards, regardless of any support or applications information provided by ON Semiconductor. "Typical" parameters which may be provided in ON Semiconductor data sheets and/or specifications can and do vary in different applications and actual performance may vary over time. All operating parameters, including "Typicals" must be validated for each customer application by customer's technical experts. ON Semiconductor does not convey any license under its patent rights nor the rights of others. ON Semiconductor products are not designed, intended, or authorized for use as a critical component in life support systems or any FDA Class 3 medical devices or medical devices with a same or similar classification in a foreign jurisdiction or any devices intended for implantation in the human body. Should Buyer purchase or use ON Semiconductor products for any such unintended or unauthorized application, Buyer shall indemnify and hold ON Semiconductor and its officers, employees, subsidiaries, affiliates, and distributors harmless against all claims, costs, damages, and expenses, and reasonable attorney fees arising out of, directly or indirectly, any claim of personal injury or death associated with such unintended or unauthorized use, even if such claim alleges that ON Semiconductor was negligent regarding the design or manufacture of the part. ON Semiconductor is an Equal Opportunity/Affirmative Action Employer. This literature is subject to all applicable copyright laws and is not for resale in any manner.

Downloaded from Arrow.com.

August 2014

FCD5N60 / FCU5N60

N-Channel SuperFET® MOSFET

600 V, 4.6 A, 950 mΩ

Features

- 650 V @ T_J = 150°C
- Typ. $R_{DS(on)}$ = 810 mΩ
- Ultra Low Gate Charge (Typ. Q_g = 16 nC)
- Low Effective Output Capacitance (Typ. $C_{oss(eff.)}$ = 32 pF)
- 100% Avalanche Tested
- RoHS Compliant

Application

- LCD/LED TV and Monitor
- Lighting
- Solar Inverter
- AC-DC Power Supply

Description

SuperFET® MOSFET is Fairchild Semiconductor's first generation of high voltage super-junction (SJ) MOSFET family that is utilizing charge balance technology for outstanding low on-resistance and lower gate charge performance. This technology is tailored to minimize conduction loss, provide superior switching performance, dv/dt rate and higher avalanche energy. Consequently, SuperFET MOSFET is very suitable for the switching power applications such as PFC, server/telecom power, FPD TV power, ATX power and industrial power applications.

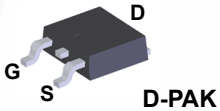

D-PAK

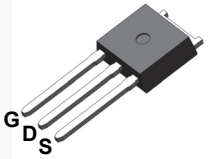

I-PAK

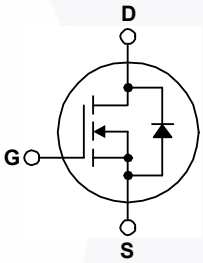

MOSFET Maximum Ratings T_C = 25°C unless otherwise noted.

Symbol	Parameter			FCD5N60TM FCD5N60TM_WS FCU5N60TU	Unit
V_{DSS}	Drain to Source Voltage			600	V
I_D	Drain Current	- Continuous (T_C = 25°C)		4.6	A
		- Continuous (T_C = 100°C)		2.9	
I_{DM}	Drain Current	- Pulsed	(Note 1)	13.8	A
V_{GSS}	Gate to Source Voltage			±30	V
E_{AS}	Single Pulsed Avalanche Energy		(Note 2)	159	mJ
I_{AR}	Avalanche Current		(Note 1)	4.6	A
E_{AR}	Repetitive Avalanche Energy		(Note 1)	5.4	mJ
dv/dt	Peak Diode Recovery dv/dt		(Note 3)	4.5	V/ns
P_D	Power Dissipation	(T_C = 25°C)		54	W
		- Derate Above 25°C		0.43	W/°C
T_J, T_{STG}	Operating and Storage Temperature Range			-55 to +150	°C
T_L	Maximum Lead Temperature for Soldering, 1/8" from Case for 5 Seconds			300	°C

Thermal Characteristics

Symbol	Parameter	FCD5N60TM FCD5N60TM_WS FCU5N60TU	Unit
$R_{\theta JC}$	Thermal Resistance, Junction to Case, Max.	2.3	°C/W
$R_{\theta JA}$	Thermal Resistance, Junction to Ambient, Max.	83	

Downloaded from Arrow.com.

Package Marking and Ordering Information

Part Number	Top Mark	Package	Packing Method	Reel Size	Tape Width	Quantity
FCD5N60TM	FCD5N60	D-PAK	Tape and Reel	330 mm	16 mm	2500 units
FCD5N60TM_WS	FCD5N60	D-PAK	Tape and Reel	330 mm	16 mm	2500 units
FCU5N60TU	FCU5N60	IPAK	Tube	N/A	N/A	75 units

Electrical Characteristics T_C = 25°C unless otherwise noted.

Symbol	Parameter	Test Conditions	Min.	Typ.	Max.	Unit
Off Characteristics						
BV_{DSS}	Drain to Source Breakdown Voltage	V_{GS} = 0 V, I_D = 250 µA, T_C = 25°C	600	-	-	V
		V_{GS} = 0 V, I_D = 250 µA, T_C = 150°C	-	650	-	V
ΔBV_{DSS} / ΔT_J	Breakdown Voltage Temperature Coefficient	I_D = 250 µA, Referenced to 25°C	-	0.6	-	V/°C
BV_{DS}	Drain to Source Avalanche Breakdown Voltage	V_{GS} = 0 V, I_D = 4.6 A	-	700	-	V
I_{DSS}	Zero Gate Voltage Drain Current	V_{DS} = 600 V, V_{GS} = 0 V	-	-	1	µA
		V_{DS} = 480 V, T_C = 125°C	-	-	10	
I_{GSS}	Gate to Body Leakage Current	V_{GS} = ±30 V, V_{DS} = 0 V	-	-	±100	nA
On Characteristics						
$V_{GS(th)}$	Gate Threshold Voltage	V_{GS} = V_{DS}, I_D = 250 µA	3.0	-	5.0	V
$R_{DS(on)}$	Static Drain to Source On Resistance	V_{GS} = 10 V, I_D = 2.3 A	-	0.81	0.95	Ω
g_{FS}	Forward Transconductance	V_{DS} = 40 V, I_D = 2.3 A	-	3.8	-	S
Dynamic Characteristics						
C_{iss}	Input Capacitance	V_{DS} = 25 V, V_{GS} = 0 V, f = 1 MHz	-	470	600	pF
C_{oss}	Output Capacitance		-	250	320	pF
C_{rss}	Reverse Transfer Capacitance		-	22	-	pF
C_{oss}	Output Capacitance	V_{DS} = 480 V, V_{GS} = 0 V, f = 1 MHz	-	12	-	pF
$C_{oss(eff.)}$	Effective Output Capacitance	V_{DS} = 0 V to 400 V, V_{GS} = 0 V	-	32	-	pF
Switching Characteristics						
$t_{d(on)}$	Turn-On Delay Time	V_{DD} = 300 V, I_D = 4.6 A, V_{GS} = 10 V, R_G = 25 Ω (Note 4)	-	12	30	ns
t_r	Turn-On Rise Time		-	40	90	ns
$t_{d(off)}$	Turn-Off Delay Time		-	47	95	ns
t_f	Turn-Off Fall Time		-	22	55	ns
$Q_{g(tot)}$	Total Gate Charge at 10V	V_{DS} = 480 V, I_D = 4.6 A, V_{GS} = 10 V (Note 4)	-	16	-	nC
Q_{gs}	Gate to Source Gate Charge		-	2.8	-	nC
Q_{gd}	Gate to Drain "Miller" Charge		-	7	-	nC
Drain-Source Diode Characteristics						
I_S	Maximum Continuous Drain to Source Diode Forward Current		-	-	4.6	A
I_{SM}	Maximum Pulsed Drain to Source Diode Forward Current		-	-	13.8	A
V_{SD}	Drain to Source Diode Forward Voltage	V_{GS} = 0 V, I_{SD} = 4.6 A	-	-	1.4	V
t_{rr}	Reverse Recovery Time	V_{GS} = 0 V, I_{SD} = 4.6 A, dI_F/dt = 100 A/µs	-	295	-	ns
Q_{rr}	Reverse Recovery Charge		-	2.7	-	µC

Notes:

1. Repetitive rating: pulse-width limited by maximum junction temperature.
2. I_{AS} = 2.3 A, V_{DD} = 50 V, R_G = 25 Ω, starting T_J = 25°C.
3. I_{SD} ≤ 4.6 A, di/dt ≤ 200 A/µs, V_{DD} ≤ BV_{DSS}, starting T_J = 25°C.
4. Essentially independent of operating temperature typical characteristics.

Downloaded from Arrow.com.

Typical Performance Characteristics

Figure 1. On-Region Characteristics

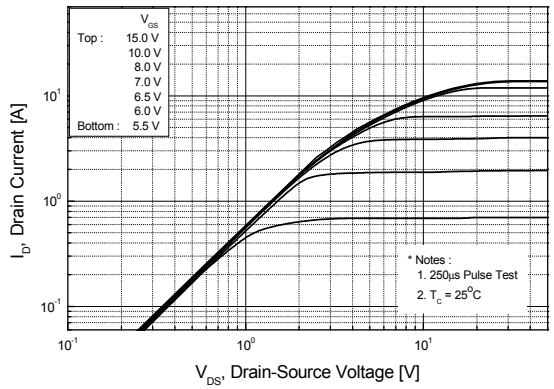

Figure 2. Transfer Characteristics

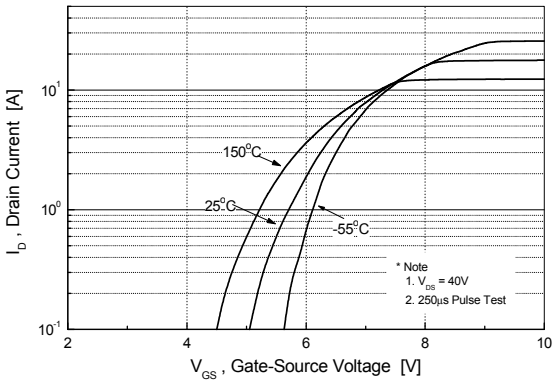

Figure 3. On-Resistance Variation vs. Drain Current and Gate Voltage

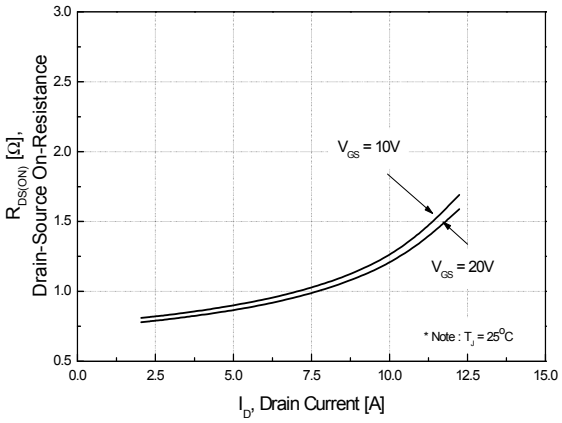

Figure 4. Body Diode Forward Voltage Variation vs. Source Current and Temperatue

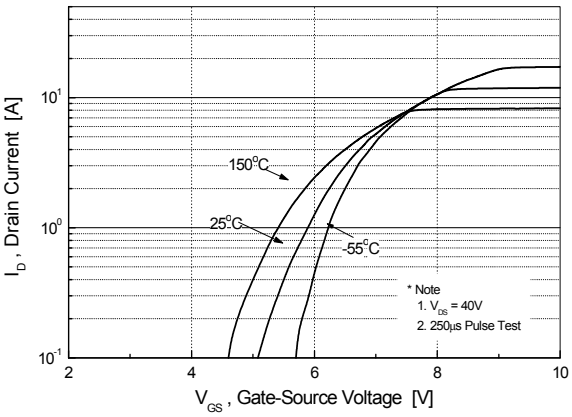

Figure 5. Capacitance Characteristics

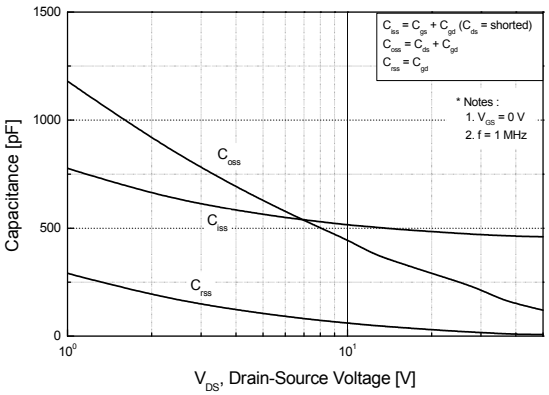

Figure 6. Gate Charge Characteristics

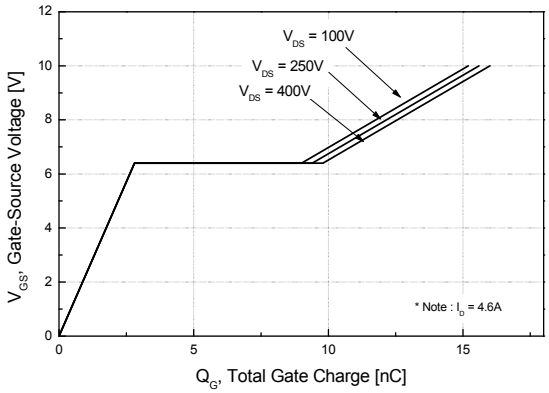

Downloaded from Arrow.com.

Typical Performance Characteristics (Continued)

Figure 7. Breakdown Voltage Variation vs. Temperature

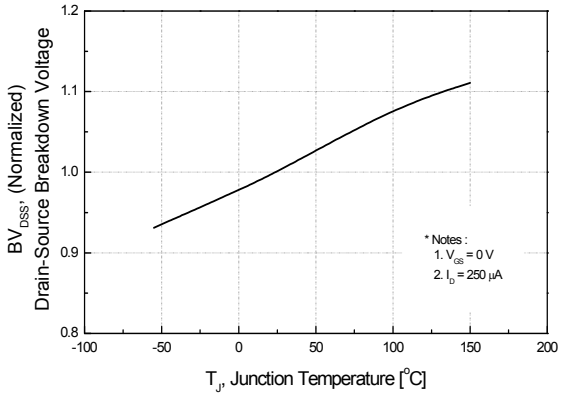

Figure 8. On-Resistance Variation vs. Temperature

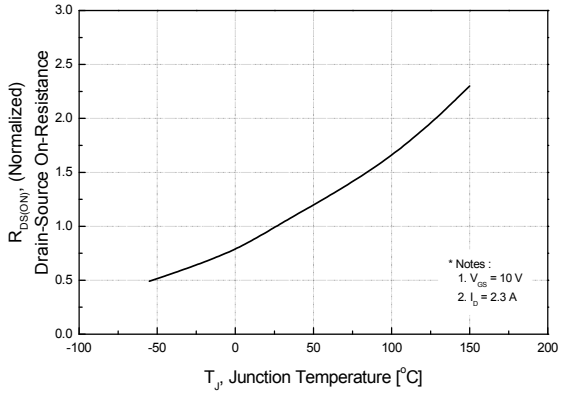

Figure 9. Maximum Safe Operating Area

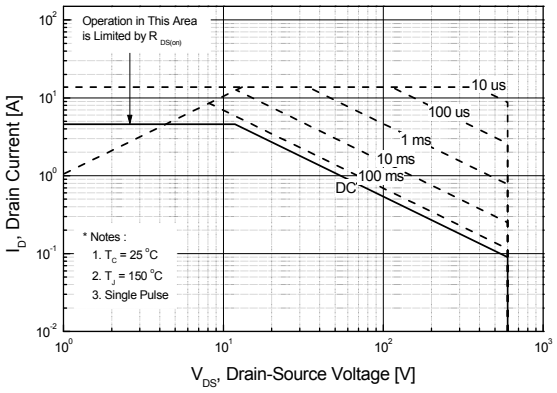

Figure 10. Maximum Drain Current vs. Case Temperature

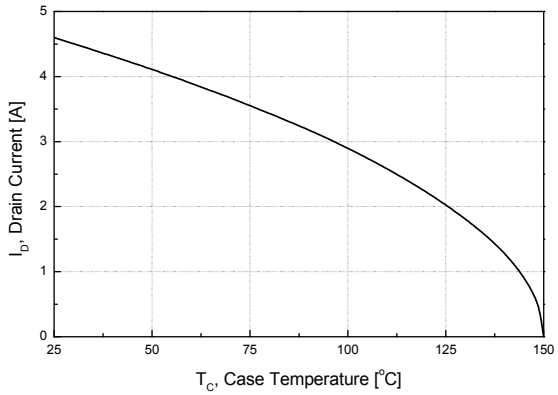

Figure 11. Transient Thermal Response Curve

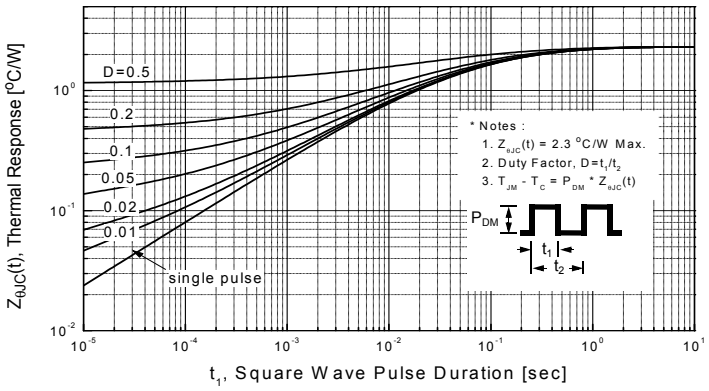

Downloaded from Arrow.com.

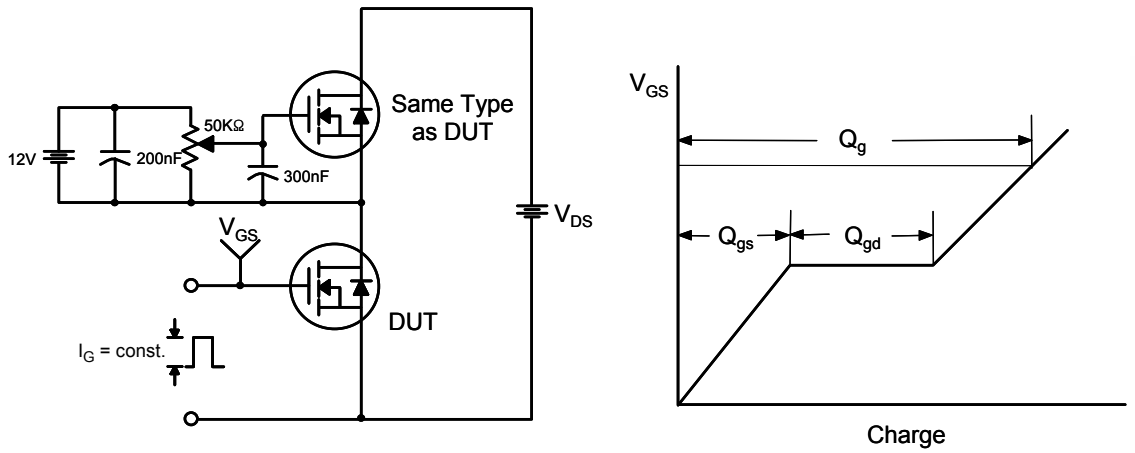

Figure 12. Gate Charge Test Circuit & Waveform

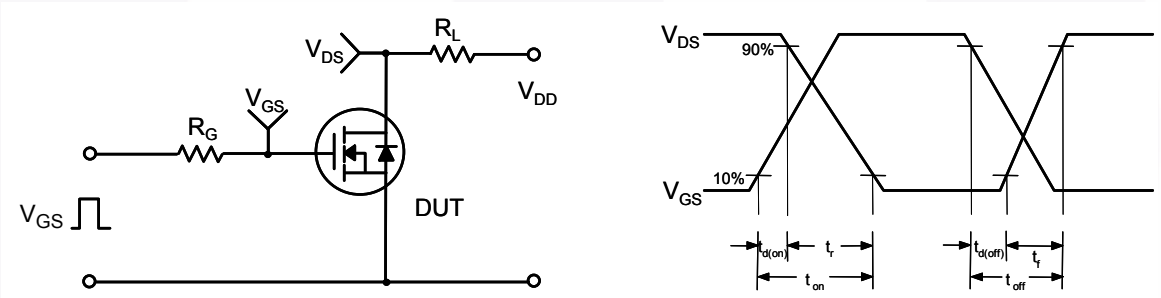

Figure 13. Resistive Switching Test Circuit & Waveforms

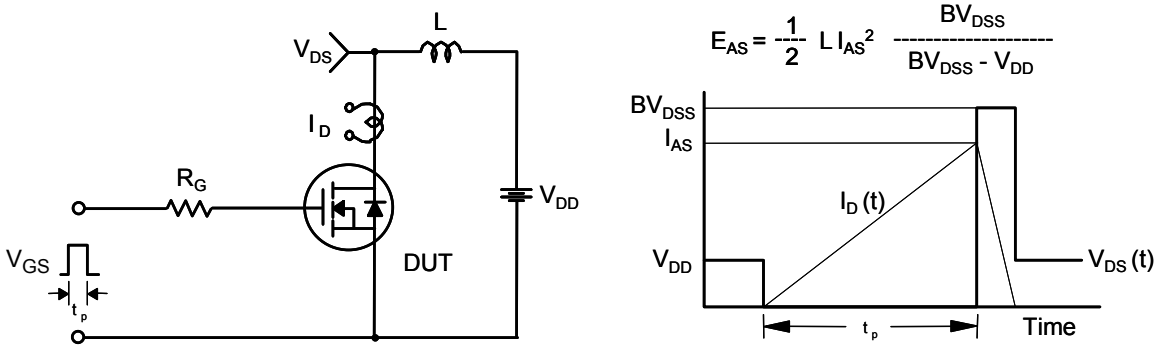

Figure 14. Unclamped Inductive Switching Test Circuit & Waveforms

Downloaded from Arrow.com.

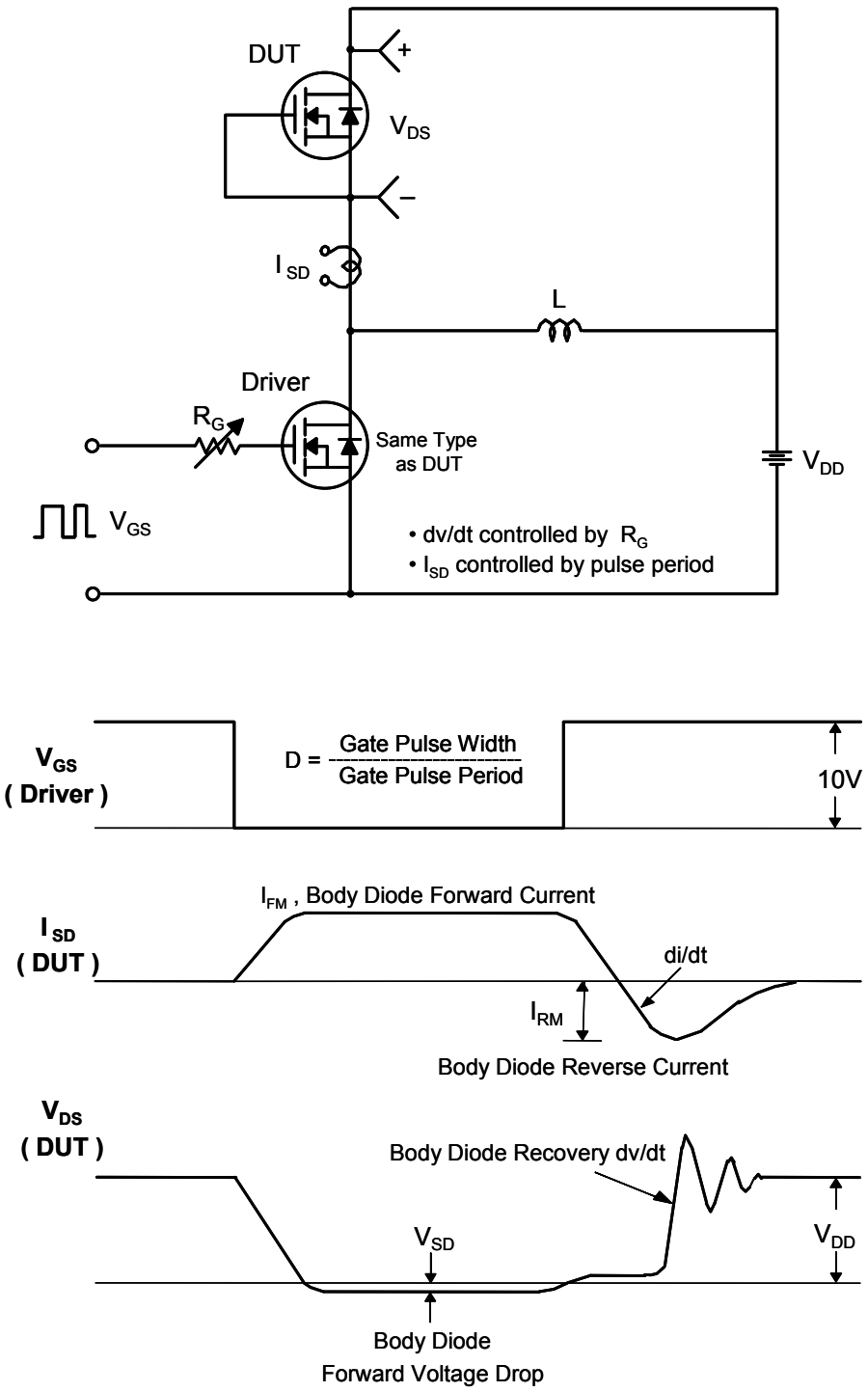

Figure 15. Peak Diode Recovery dv/dt Test Circuit & Waveforms

Downloaded from Arrow.com.

ON Semiconductor and ON are trademarks of Semiconductor Components Industries, LLC dba ON Semiconductor or its subsidiaries in the United States and/or other countries. ON Semiconductor owns the rights to a number of patents, trademarks, copyrights, trade secrets, and other intellectual property. A listing of ON Semiconductor's product/patent coverage may be accessed at www.onsemi.com/site/pdf/Patent−Marking.pdf. ON Semiconductor reserves the right to make changes without further notice to any products herein. ON Semiconductor makes no warranty, representation or guarantee regarding the suitability of its products for any particular purpose, nor does ON Semiconductor assume any liability arising out of the application or use of any product or circuit, and specifically disclaims any and all liability, including without limitation special, consequential or incidental damages. Buyer is responsible for its products and applications using ON Semiconductor products, including compliance with all laws, regulations and safety requirements or standards, regardless of any support or applications information provided by ON Semiconductor. "Typical" parameters which may be provided in ON Semiconductor data sheets and/or specifications can and do vary in different applications and actual performance may vary over time. All operating parameters, including "Typicals" must be validated for each customer application by customer's technical experts. ON Semiconductor does not convey any license under its patent rights nor the rights of others. ON Semiconductor products are not designed, intended, or authorized for use as a critical component in life support systems or any FDA Class 3 medical devices or medical devices with a same or similar classification in a foreign jurisdiction or any devices intended for implantation in the human body. Should Buyer purchase or use ON Semiconductor products for any such unintended or unauthorized application, Buyer shall indemnify and hold ON Semiconductor and its officers, employees, subsidiaries, affiliates, and distributors harmless against all claims, costs, damages, and expenses, and reasonable attorney fees arising out of, directly or indirectly, any claim of personal injury or death associated with such unintended or unauthorized use, even if such claim alleges that ON Semiconductor was negligent regarding the design or manufacture of the part. ON Semiconductor is an Equal Opportunity/Affirmative Action Employer. This literature is subject to all applicable copyright laws and is not for resale in any manner.

PUBLICATION ORDERING INFORMATION

LITERATURE FULFILLMENT:
Literature Distribution Center for ON Semiconductor
19521 E. 32nd Pkwy, Aurora, Colorado 80011 USA
Phone: 303−675−2175 or 800−344−3860 Toll Free USA/Canada
Fax: 303−675−2176 or 800−344−3867 Toll Free USA/Canada
Email: orderlit@onsemi.com

N. American Technical Support: 800−282−9855 Toll Free USA/Canada
Europe, Middle East and Africa Technical Support:
Phone: 421 33 790 2910
Japan Customer Focus Center
Phone: 81−3−5817−1050

ON Semiconductor Website: **www.onsemi.com**

Order Literature: http://www.onsemi.com/orderlit

For additional information, please contact your local Sales Representative

Downloaded from Arrow.com.