THIS DRAWING IS UNPUBLISHED. RELEASED FOR PUBLICATION 20
© COPYRIGHT 20 BY TYCO ELECTRONICS CORPORATION. ALL RIGHTS RESERVED.

LOC	DIST
CM	00

REVISIONS

P	LTR	DESCRIPTION	DATE	DWN	APVD
	0	RELEASED PER 0G3B-0254-04	09-JUN-04	SH	DC

1 AMP LOGO AND CAVITY NUMBER LOCATED ON EITHER SURFACE.

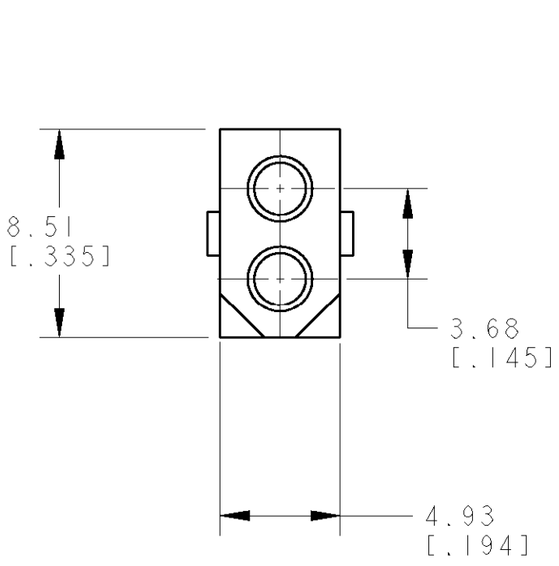

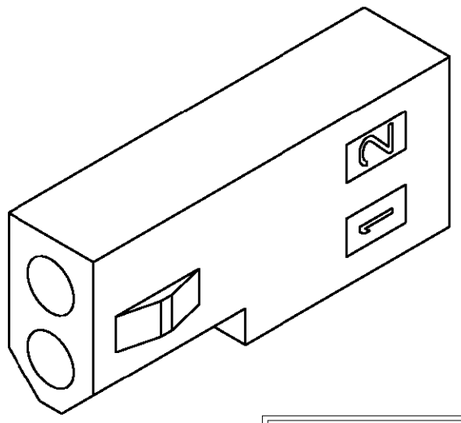

METRIC

THIS DRAWING IS A CONTROLLED DOCUMENT FOR TYCO ELECTRONICS CORPORATION IT IS SUBJECT TO CHANGE AND THE CONTROLLING ENGINEERING ORGANIZATION SHOULD BE CONTACTED FOR THE LATEST REVISION.

DIMENSIONS: mm [INCHES]

TOLERANCES UNLESS OTHERWISE SPECIFIED:

0 PLC	±-
1 PLC	±-
2 PLC	±0.13 [.005]
3 PLC	±-
4 PLC	±-
ANGLES	±0° 30′

MATERIAL: NYLON, UL94V-2, BLACK

FINISH: -

DWN	K. WHITAKER	05JAN04
CHK	D. COLEY	05JAN04
APVD	D. COLEY	05JAN04

PRODUCT SPEC: -

APPLICATION SPEC: -

WEIGHT: -

CUSTOMER DRAWING

Tyco Electronics
Harrisburg, PA 17105-3608

NAME: RECEPTACLE, 2 CIRCUIT, .062 PIN AND SOCKET
-

SIZE	CAGE CODE	DRAWING NO	RESTRICTED TO
A3	00779	C-1586128	-

SCALE 4:1 SHEET 1 OF 1 REV 0

1586128-1

PART NUMBER

Downloaded from Arrow.com.