SINGLE TURN CERMET TRIMMERS RJ-4

RoHS compliant

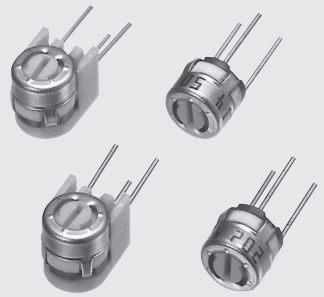

■ FEATURES

- RoHS compliant
- Compact with power rating of 0.5 W
- Precious metal alloy wiper
- Resin material is UL Recognized 94V-0

INTERNAL STRUCTURE

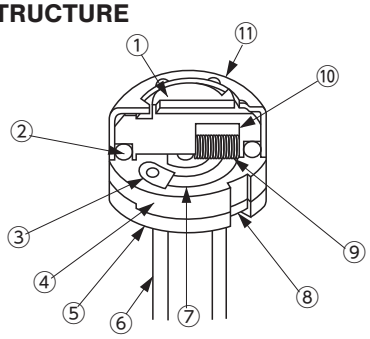

Part name		Material
①	Rotor	PBT (Polybutyleneterephthalate)
②	“O” ring	Silicone rubber
③	Electrode	Ag-Pd cermet
④	Base element	Ceramic
⑤	Base	PPS(Polyphenylenesulphide)
⑥	Terminal pin	Copper alloy, Tin-plated
⑦	Resistive element	RuO_2 cermet
⑧	Adhesive	Epoxy
⑨	Wiper	Multi metal alloy
⑩	Rubber cushion	Silicone rubber
⑪	Cover	Stainless steel

■ PART NUMBER DESIGNATION

R J - 4 E W S 2 kΩ (2 0 2)

Series name

Terminal pin
E : Sn (Lead-free)

Product shape
W : Top adjustment
WS : Side adjustment

Resistance code

Resistance value

※ Please refer to the LIST OF PART NUMBERS when placing orders.

Downloaded from Arrow.com.

RJ-4
CERMET TRIMMERS

■ LIST OF PART NUMBERS

Adjustment position	Form of packaging	Pieces in package
	Plastic bag	
Top adjustment	RJ-4EW	50 pcs./pack
Side adjustment	RJ-4EWS	

※ The above part numbers are all available with the respective combination of <Nominal resistance values> (Fig. 1).
※ Verify the above part numbers when placing orders.

〈Nominal resistance values〉

⊖10 Ω	⊖20 Ω	50 Ω	100 Ω	200 Ω	500 Ω	1 kΩ	2 kΩ	5 kΩ
10 kΩ	20 kΩ	50 kΩ	100kΩ	200kΩ	500kΩ	1 MΩ	2 MΩ	

Fig. 1

The products indicated by ⊖ mark are manufactured upon receipt of order basis.

■ ELECTRICAL CHARACTERISTICS

Nominal resistance range	10 Ω ~ 2 MΩ
Resistance tolerance	± 10 %
Power ratings	0.5 W (70 °C) 0 W (120 °C)
Resistance law	Linear law(B)
Maximum input voltage	DC200 V or power rating, whichever is smaller
Maximum wiper current	100 mA or power rating, whichever is smaller
Effective electrical angle	200 ° (1 turn)
End resistance	1 % or 2 Ω, whichever is greater
C.R.V.	1 % or 3 Ω, whichever is greater
Operating temp. range	− 55 ~ 120 °C
Temp. coefficient	10 Ω ~ 50 Ω : ± 250 10^{-6}/°C maximum 100 Ω ~ 2 MΩ : ± 100 10^{-6}/°C maximum
Insulation resistance	1000 MΩ minimum (DC500 V)
Dielectric strength	AC500 V, 60 s
Net weight	Approx. 0.26 g (RJ-4EW) Approx. 0.35 g (RJ-4EWS)

■MECHANICAL CHARACTERISTICS

Mechanical angle	230 ° (1 turn)
Operating torque	15 mN·m {153 gf·cm} maximum
Stop strength	45 mN·m {459 gf·cm} minimum
Rotational life	200 cycles 10 Ω ~ 200 Ω [ΔR/R ≦ ± (0.5 Ω +3 %)] 500 Ω ~ 2 MΩ[ΔR/R ≦ ± (0.5 Ω +2 %)]
Terminal strength	10 N {1.02 kgf} minimum (Tensile strength)
Thrust to rotor	10 N {1.02 kgf} minimum
Solderability	245 ± 3 °C, 2 ~ 3 s

{ } : Reference only

■ ENVIRONMENTAL CHARACTERISTICS

Test item	Test conditions	Specifications
Thermal shock	− 65 ~ 125 °C (0.5 h), 5 cycles	[Δ R/R ≦ 1 %] [S.S. ≦ 1 %]
Humidity	−10 ~ 65 °C (Relative humidity 80 ~ 98 %), 10 cycles, 240 h	[Δ R/R ≦ 1 %]
Shock	981 m/s², 6 ms 6 directions for 3 times each	[Δ R/R ≦ 1 %] [S.S. ≦ 1 %]
Vibration	Amplitude 1.52 mm or Acceleration 196 m/s², 10 ~ 2000 Hz, 3 directions, 12 times each	
Load life	70 °C, 0.5 W 1000 h	[Δ R/R ≦ 3 %] [S.S. ≦ 1 %]
Low temp. operation	− 55 °C, 2 h	[Δ R/R ≦ 2 %] [S.S. ≦ 2 %]
High temp. exposure	120 °C, 250 h	[Δ R/R ≦ 3 %] [S.S. ≦ 2 %]
Immersion seal	85 °C, 60 s	No leaks (No continuous bubbles)
Soldering heat	Flow : 260 ± 3 °C, 5 ~ 6 s, two times Manual soldering : 380 ± 10 °C, 3 ~ 4 s	[Δ R/R ≦ 1 %]

Δ R/R : Change in total resistance
S.S. : Setting stability

Downloaded from Arrow.com.

MAXIMUM INPUT RATINGS

Nominal resistance values (Ω)	Resistance code	Maximum input voltage (V)	Maximum wiper current (mA)
⊖ 10	100	1.00	100
⊖ 20	200	2.00	100
50	500	5.00	100
100	101	7.07	70.7
200	201	10.0	50.0
500	501	15.8	31.6
1 k	102	22.4	22.4
2 k	202	31.6	15.8
5 k	502	50.0	10.0
10 k	103	70.7	7.07
20 k	203	100	5.00
50 k	503	158	3.16
100 k	104	200	2.00
200 k	204	200	1.00
500 k	504	200	0.40
1 M	105	200	0.20
2 M	205	200	0.10

The products indicated by ⊖ mark are manufactured upon receipt of order basis.

OUTLINE DIMENSIONS

Unless otherwise specified, tolerance : ± 0.3 (Unit : mm)

RJ-4EW
Top adjustment

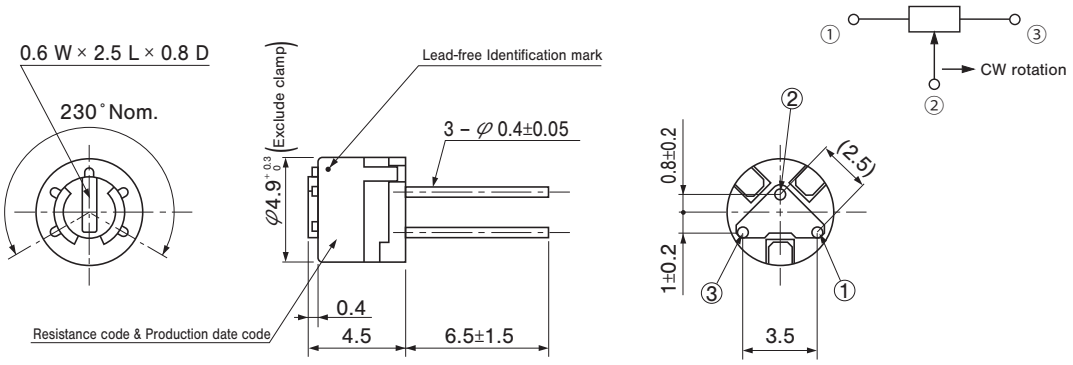

RJ-4EWS
Side adjustment

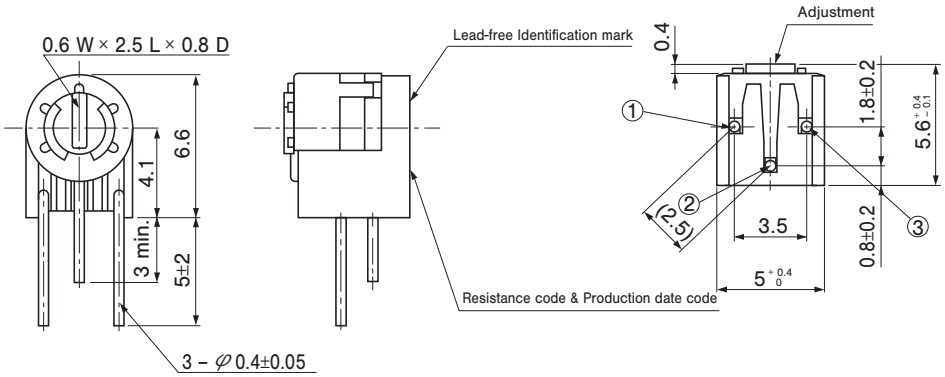

PACKAGING SPECIFICATIONS

<Bulk pack specifications>

- Unit of bulk pack in a plastic bag is 50 pcs. per pack.
- Boxing of bulk in a plastic bag is performed with 200 pcs. per box.

Downloaded from Arrow.com.