ShinDengen

DL04-33F1

TVS

9.5A, 400W

Feature

- Optimized for Multiple Protection Purposes
  [ESD],[Lighting Surge],[Automotove Transient Surge]
- Peak pulse power:400W
- High Speed
- Bi-directional
- Small SMD
- Based on AEC-Q101
- Tj=175°C
- Pb free terminals
- RoHS_Yes

OUTLINE

Package (House Name): 1F
Package (JEDEC Code): DO-214AC

Equivalent circuit

Absolute Maximum Ratings (unless otherwise specified : Tl=25°C)

Item	Symbol	Conditions	Ratings	Unit
Storage temperature	Tstg		-55 to 175	°C
Operating junction temperature	Tj		-55 to 175	°C
Maximum surge reverse current	I_{RSM}	10/1000µs, Non-repetitive ※	9.5	A
Maximum surge reverse power	P_{RSM}	10/1000µs, Non-repetitive ※	400	W
Continuous (direct) reverse voltage	$V_{R(DC)}$		25	V

※ ：See the original Specifications

Electrical Characteristics (unless otherwise specified : Tl=25°C)

Item	Symbol	Conditions	Ratings			Unit
			MIN	TYP	MAX	
Breakdown voltage	V_{BR}	IR=1mA, Pulse measurement	31		35	V
Reverse current	I_R	VR=25V, Pulse measurement			5	µA
Thermal resistance	Rth(j-l)	Junction to lead, On glass-epoxy substrate ※			23	°C/W
Thermal resistance	Rth(j-a)	Junction to ambient, On glass-epoxy substrate ※			157	°C/W

※ ：See the original Specifications

Downloaded from Arrow.com.

CHARACTERISTIC DIAGRAMS

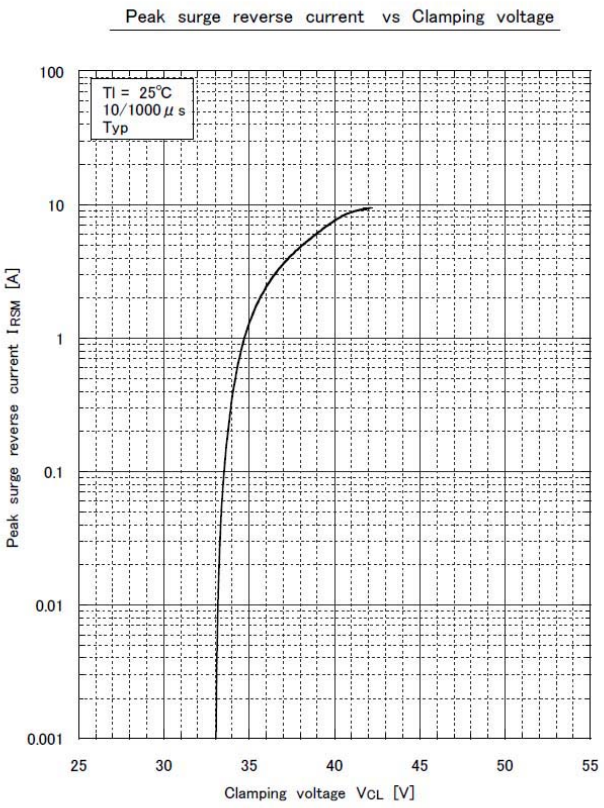

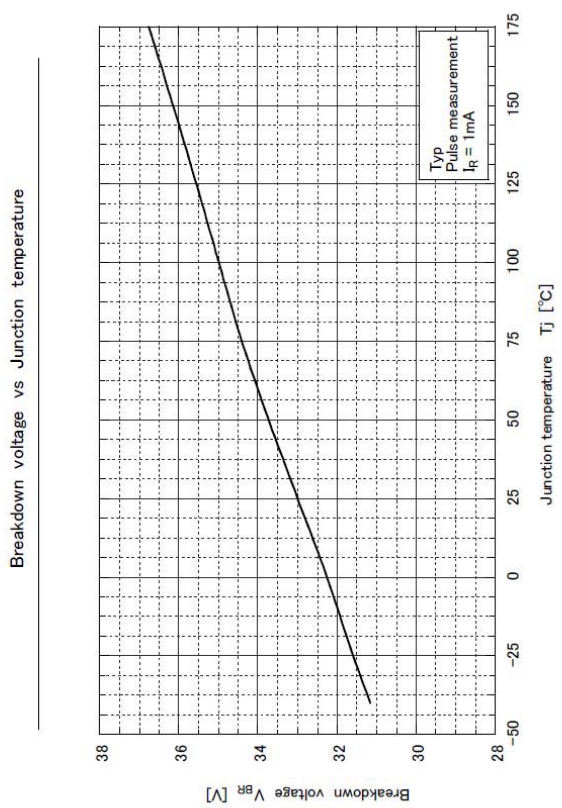

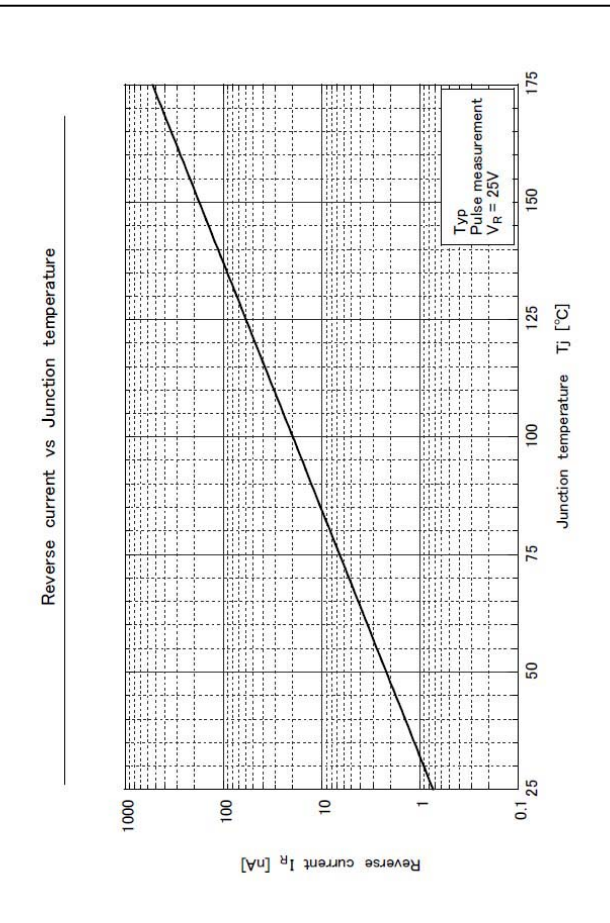

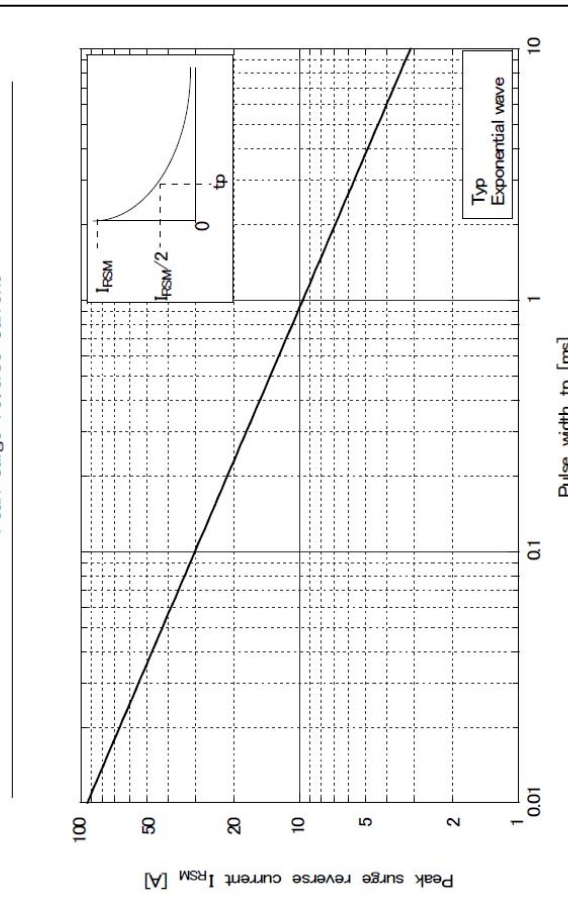

Downloaded from Arrow.com.

Total capacitance

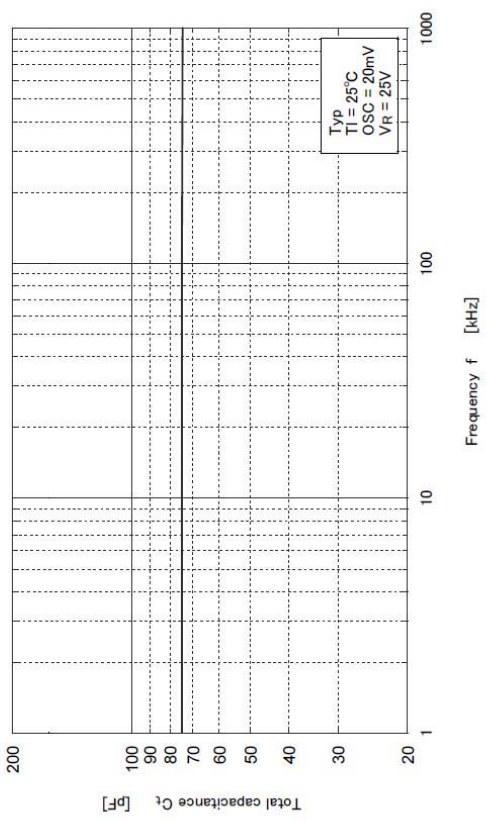

Total capacitance

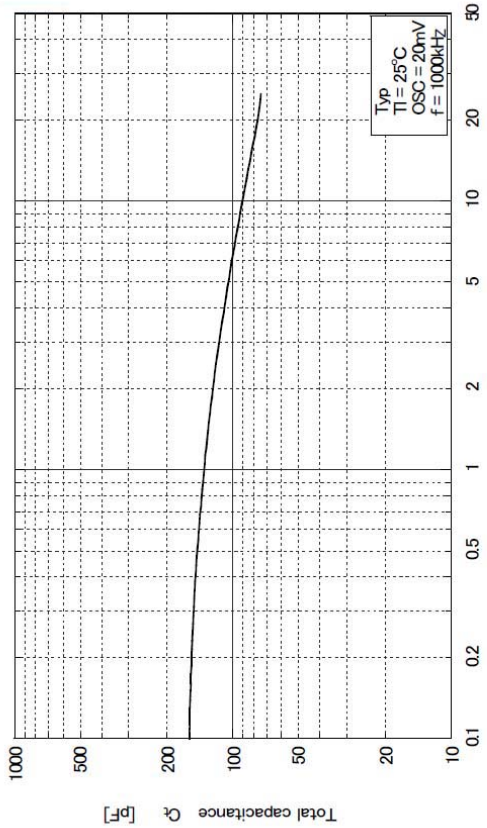

Transient thermal impedance

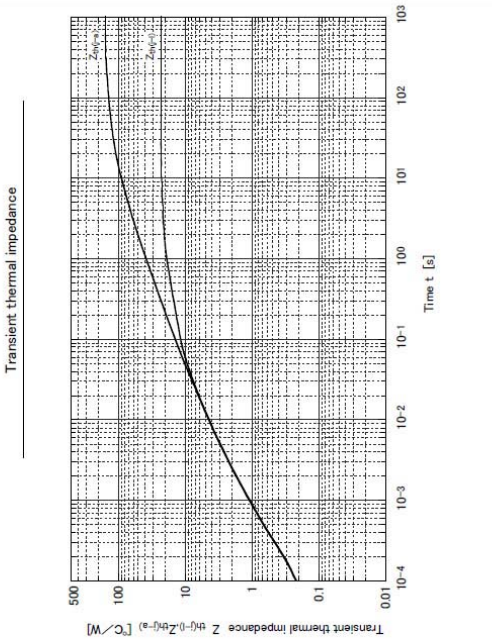

Substrate detail

Type	Glass-epoxy
Size	1 inch²
Thickness	1mm
Conductor thickness	35μm
Pattern area	47.8mm²

Tl sensing point

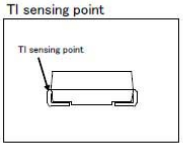

Downloaded from Arrow.com.

Outline Dimensions

unit:mm

scale: 10/1

B4

JEDEC Code	DO-214AC
JEITA Code	–
House Name	1F

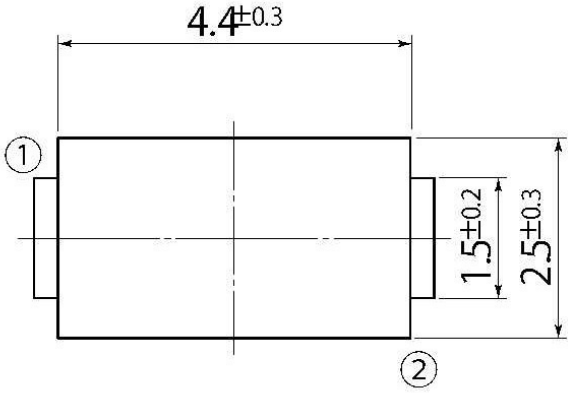

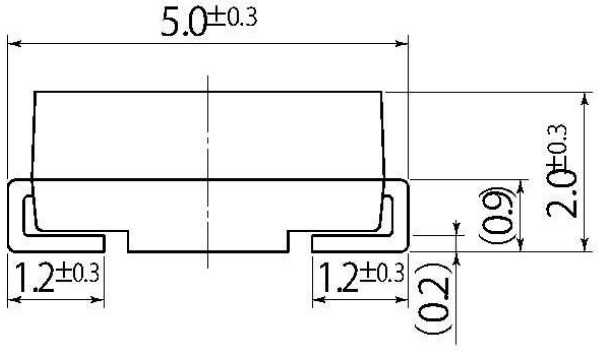

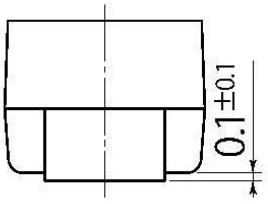

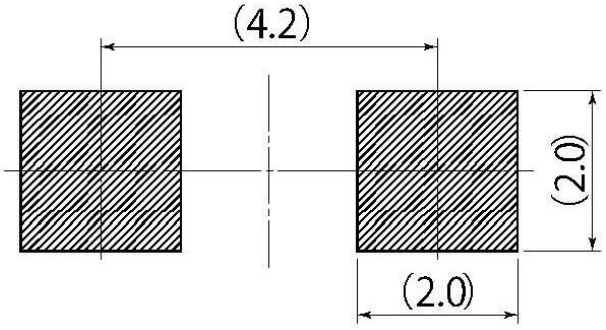

Referential Soldering Pad

・Optimize soldering pad to the board design and soldering condi tion.

Downloaded from Arrow.com.

Notes

1. If you wish to use any such product, please be sure to refer to the specifications issued by Shindengen.

2. All products described or contained herein are designed with a quality level intended for use in standard applications requiring an ordinary level of reliability. If these products are to be used in equipment or devices for special or specific applications requiring an extremely high grade of quality or reliability in which failures or malfunctions of products may directly affect human life or health, a local Shindengen office must be contacted in advance to confirm that the intended use of the product is appropriate. Shindengen products are grouped into the following three applications according the quality grade.

   【Standard applications】
   Computers, office automation and other office equipment, communication terminals, test and measurement equipment, audio/visual equipment, amusement equipment, consumer electronics, machine tools, personal electronic equipment, industrial equipment, etc.
   【Special applications】
   Transportation equipment (vehicles, ships, etc.), trunk-line communication equipment, traffic signal control systems, anti-disaster/crime systems, safety equipment, medical equipment, etc.
   【Specific applications】
   Nuclear reactor control systems, aircraft, aerospace equipment, submarine repeaters, life support equipment and systems, etc.

3. Although Shindengen continuously endeavors to enhance the quality and reliability of its products, customers are advised to consider and take safety measures in their design, such as redundancy, fire containment and anti-failure, so that personal injury, fires, or societal damages can be prevented.

4. Please note that all information described or contained herein is subject to change without notice due to product upgrades and other reasons. When buying Shindengen products, please contact the Company’s offices or distributors to obtain the latest information.

5. Shindengen shall not bear any responsibility with regards to damages or infringement of any third-party patent rights and other intellectual property rights incurred due to the use of information on this website.

6. The information and materials on this website neither warrant the use of Shindengen's or any third party’s patent rights and other intellectual property rights, nor grant license to such rights.

7. In the event that any product described or contained herein falls under the category of strategic products controlled under the Foreign Exchange and Foreign Trade Control Law of Japan, exporting of such products shall require an export license from the Japanese government in accordance with the above law.

8. No reprinting or reproduction of the materials on this website, either in whole or in part, is permitted without proper authorization from Shindengen.

Downloaded from Arrow.com.