EVALUATION BOARD MANUAL
ES2811AA2-EVB

EVALUATION KIT MANUAL
ES2811AA2-EVK

for ES2811 Series Bluetooth® low energy Module

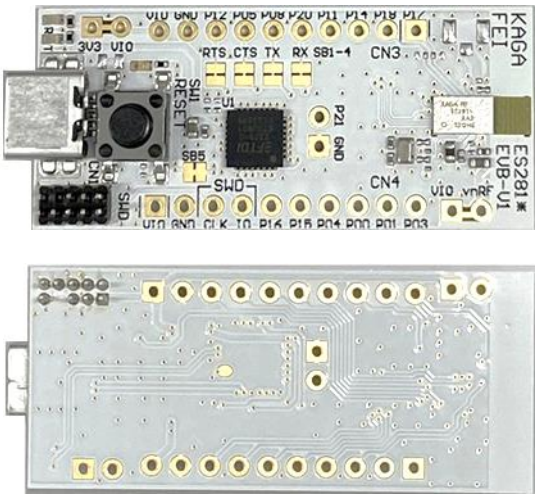

Copyright 2023 KAGA FEI Co., Ltd.

Downloaded from Arrow.com.

Contents

1. Introduction 3
2. Mounted module 3
3. Content 4
4. Evaluation board circuit schematic 4
5. Evaluation board layout 5
6. Silkscreen Printing 5
7. Pin Descriptions 6
8. How to use 6
9. For software development 7
10. MEMO 8
11. Important notes 10

Copyright 2023 KAGA FEI Co., Ltd.

Downloaded from Arrow.com.

1.Introduction

This evaluation board is applicable for KAGA FEI's ***Bluetooth*® low energy** module, ES2811 Series.

Serial UART interface and power supply are possible with one USB cable. And this board has the SWD connector terminal for software development.

2.Mounted module

ES2811 (8.55mm x 3.25mm x 1.00mm_MAX)

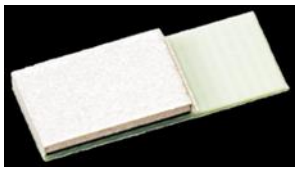

Nordic nRF52811 / ARM® Cortex™-M4 32 bit processor
28-pin Land Grid Array / 15GPIOs / SWD

- Basic Module –
KAGA FEI writes S113 SoftDevice to this product (ES2811AA2).
The user can develop unique application for the module.

Copyright 2023 KAGA FEI Co., Ltd.

Downloaded from Arrow.com.

3.Content

1	ES2811AA2-EVB Evaluation Board + USB cable for Evaluation Board	1 pc
2	J-Link Lite (ES2811AA2-EVK Only) + USB cable for Evaluation Board *1	1 set

1. ES2811AA2-EVB

2. ES2811AA2-EVK

*1 Notes on using J-Link Lite

J-Link Lite is only delivered and supported as part of an evaluation kit, which includes an evaluation board. It may only be used with the evaluation board it came with, and not to be used for commercial product development.

4.Evaluation board circuit schematic

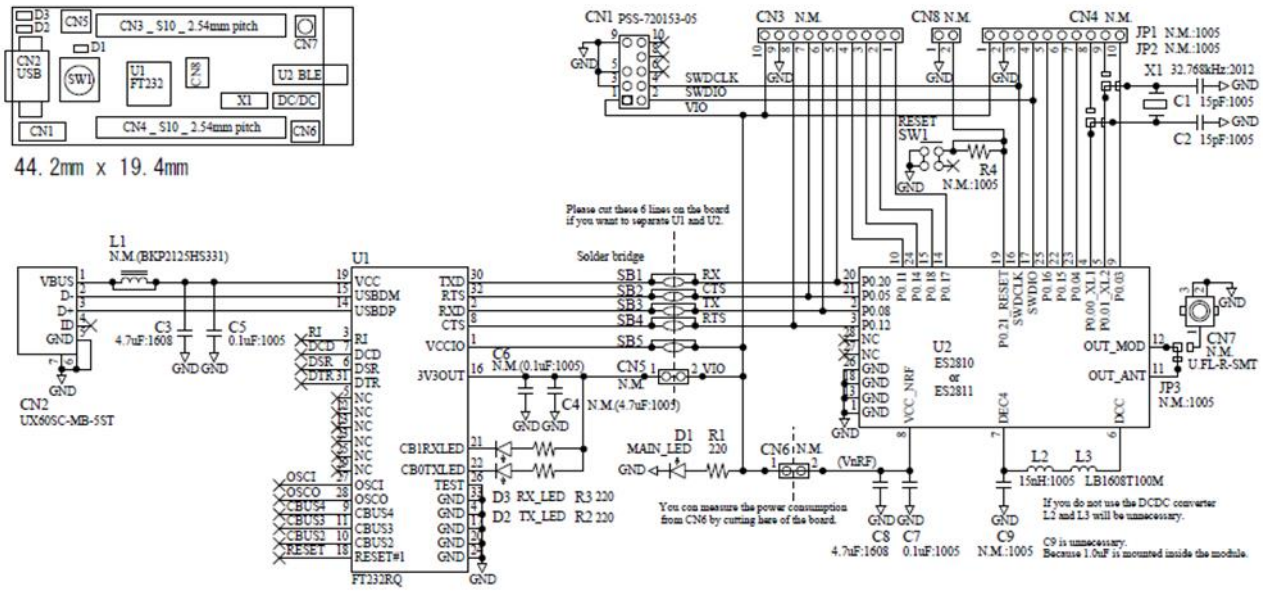

Copyright 2023 KAGA FEI Co., Ltd.

Downloaded from Arrow.com.

5.Evaluation board layout

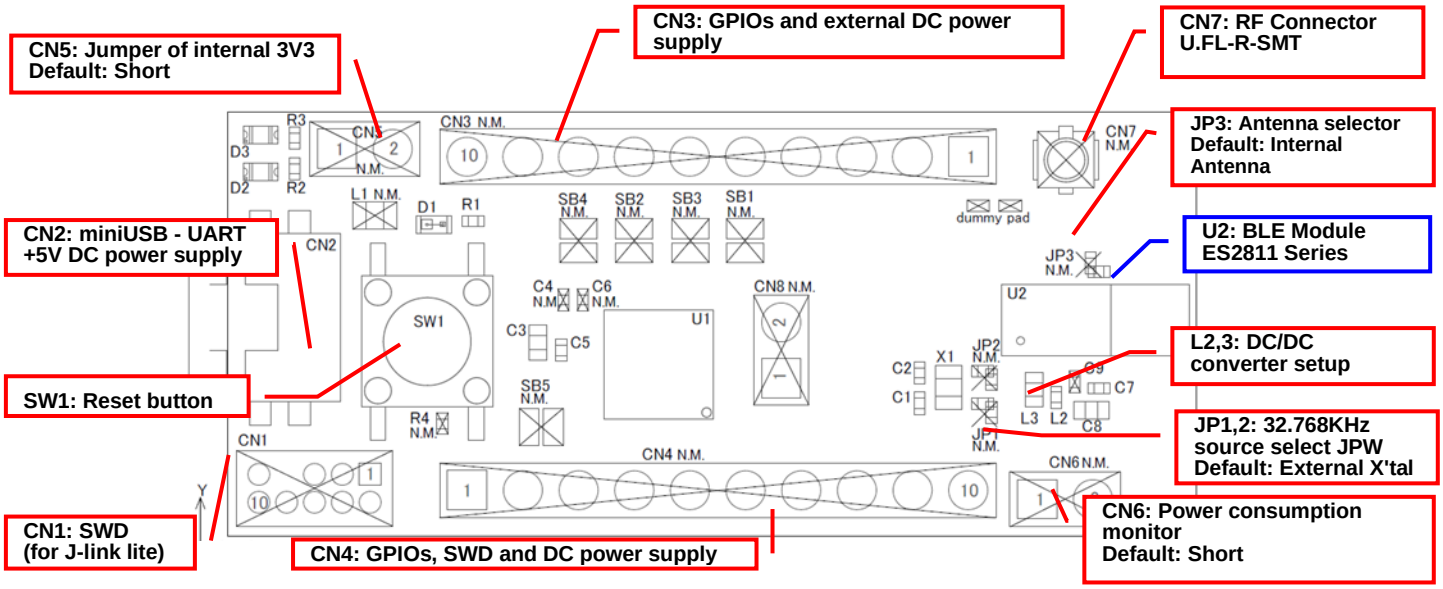

1) All pin headers are 2.54mm pitch. And distance between **CN3** and **CN4** is **15.24mm**.
2) **CN3-CN8, C4, C6, C9, R4, L1, JP1-JP3, SB1-5** are not mounted (N.M.).
3) **D1 (LED):** 3.3V Indicator
4) **D2 (LED):** UART TX Indicator
5) **D3 (LED):** UART RX Indicator
6) **SW1 (Push button):** Module Reset (active low)

6.Silkscreen Printing

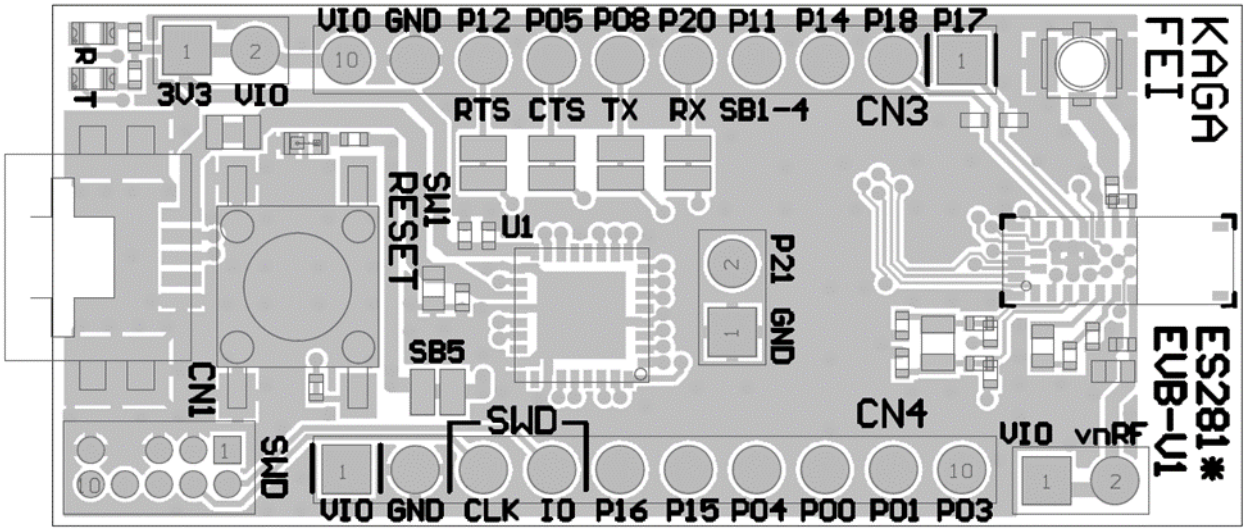

Copyright 2023 KAGA FEI Co., Ltd.

Downloaded from Arrow.com.

7.Pin Descriptions

Pin No.	CN3	CN4	CN8
1	P0.17	VIO	GND
2	P0.18	GND	P0.21/RESET
3	P0.14	SWDCLK	-
4	P0.11	SWDIO	-
5	P0.20	P0.16	-
6	P0.08	P0.15	-
7	P0.05	P0.04	-
8	P0.12	P0.00	-
9	GND	P0.01	-
10	VIO	P0.03	-

8.How to use

It is very easy just to tie this board to the PC with a USB cable. It is not necessary to change the setting of the board. The power supply of the module supplies by default 3.3V from 3V3OUT of FT232RQ.

Copyright 2023 KAGA FEI Co., Ltd.

Downloaded from Arrow.com.

9.For software development

Nordic-DK and Use case

Nordic nRF Connect etc.

NORDIC DK

ES2811AA2-EVB

miniUSB

SWD

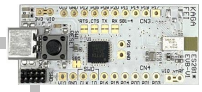

SWD : Serial Wire Debug
It can be use J-Link Lite CortexM-9 JTAG/SWD Emulator that attached with ES2811AA2-EVK

CN1 supports the connection of the 10 pin 1.27 mm flat cable.

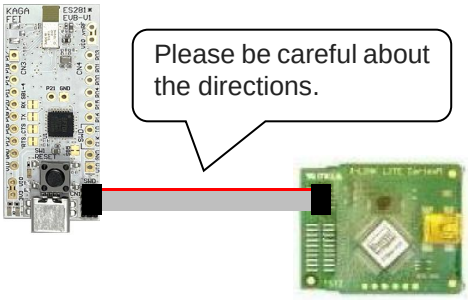

Please be careful about the directions.

・SEGGER Embedded Studio

・Visual Studio Code

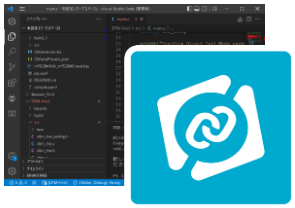

・nRF Connect for Desktop

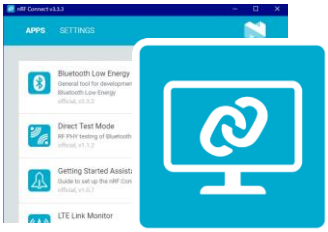

etc.

Nordic-DK
https://www.nordicsemi.com/Products/Development-hardware/nrf52-dk

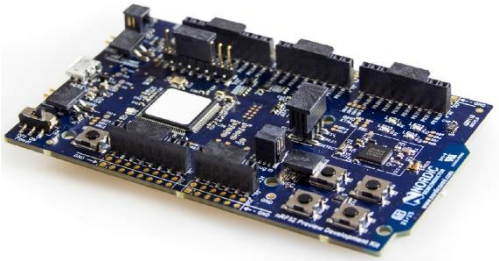

Copyright 2023 KAGA FEI Co., Ltd.

Downloaded from Arrow.com.

10.MEMO

1) **Current measurement**

To measure the current, please cut the shorting 1pin and 2 pin of CN6. And connect an ampere-meter between the pins of connector CN6 to monitor the current directly.

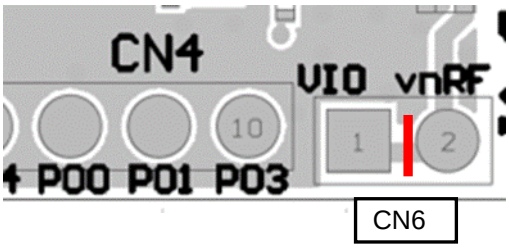

2) **About the power supply of the module**

When you use external power supply, please supply power from 9pin and 10pin of CN3. On this configuration, you cut short circuit 1pin and 2pin of CN5 and should separate 3V3OUT of FT232RQ.

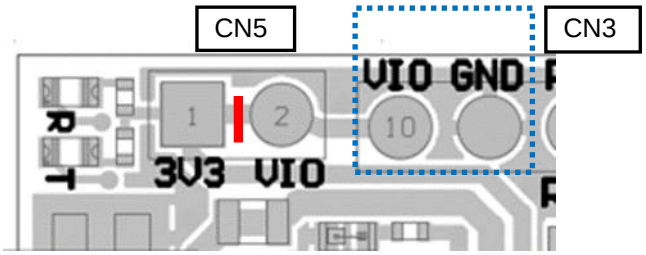

3) **USB to serial UART interface**

It needs to install driver of FT232RQ to use USB for UART interface.
The drivers are available on FTDI website.

http://www.ftdichip.com/Drivers/D2XX.htm

In addition, by the application development, please assign GPIO as follows.

GPIO	UART
P0.12	RTS
P0.08	TX
P0.05	CTS
P0.20	RX

Copyright 2023 KAGA FEI Co., Ltd.

Downloaded from Arrow.com.

4) Size and Coordinate information

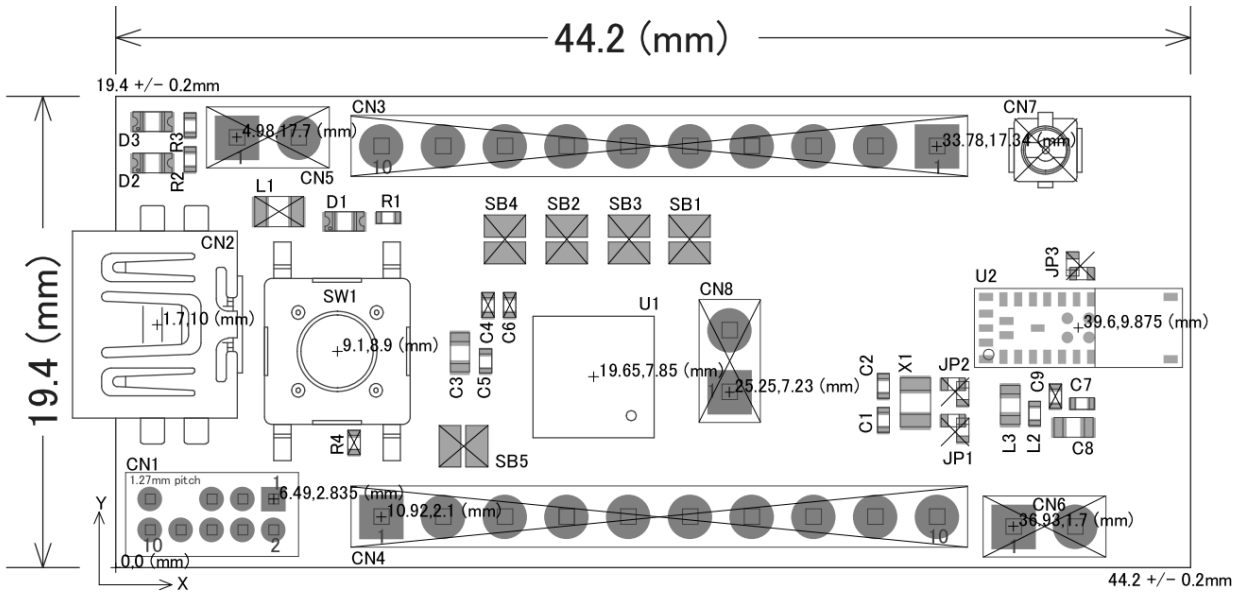

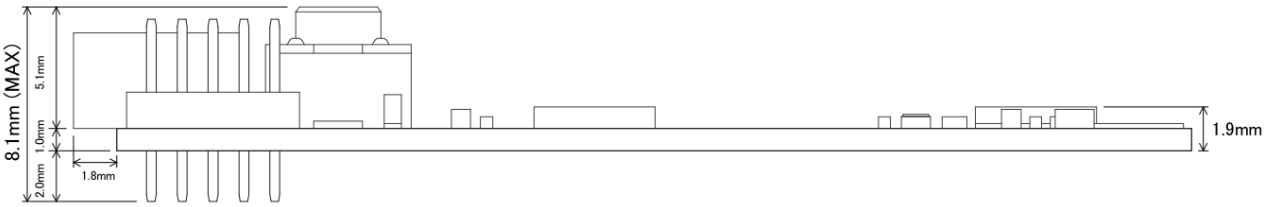

Copyright 2023 KAGA FEI Co., Ltd.

Downloaded from Arrow.com.

11. Important notes

32kHz Clock

This module does not installed 32.768kHz crystal. In case of operating without external crystal, please modify sdk_config.h in order to enable internal 32.768kHz RC oscillator (32k RCOSC).
The content may change depending on the SDK you use.

```
--sdk_config.h-- (In case of SDK17.1)
// <o> CLOCK_CONFIG_LF_SRC    - LF Clock Source
// <0=> RC
// <1=> XTAL
// <2=> Synth
// <131073=> External Low Swing
// <196609=> External Full Swing
#ifndef CLOCK_CONFIG_LF_SRC
#define CLOCK_CONFIG_LF_SRC 0
#endif
// </h>
//==========================================================
// <h> Clock - SoftDevice clock configuration
//==========================================================
// <o> NRF_SDH_CLOCK_LF_SRC    - SoftDevice clock source.
// <0=> NRF_CLOCK_LF_SRC_RC
// <1=> NRF_CLOCK_LF_SRC_XTAL
// <2=> NRF_CLOCK_LF_SRC_SYNTH
#ifndef NRF_SDH_CLOCK_LF_SRC
#define NRF_SDH_CLOCK_LF_SRC 0
#endif
// <o> NRF_SDH_CLOCK_LF_RC_CTIV - SoftDevice calibration timer interval.
#ifndef NRF_SDH_CLOCK_LF_RC_CTIV
#define NRF_SDH_CLOCK_LF_RC_CTIV 16
#endif
// <o> NRF_SDH_CLOCK_LF_RC_TEMP_CTIV - SoftDevice calibration timer interval under constant temperature.
// <i> How often (in number of calibration intervals) the RC oscillator shall be calibrated
// <i>    if the temperature has not changed.
#ifndef NRF_SDH_CLOCK_LF_RC_TEMP_CTIV
#define NRF_SDH_CLOCK_LF_RC_TEMP_CTIV 2
#endif
// <o> NRF_SDH_CLOCK_LF_ACCURACY    - External clock accuracy used in the LL to compute timing.
// <0=> NRF_CLOCK_LF_ACCURACY_250_PPM
// <1=> NRF_CLOCK_LF_ACCURACY_500_PPM
// <2=> NRF_CLOCK_LF_ACCURACY_150_PPM
// <3=> NRF_CLOCK_LF_ACCURACY_100_PPM
// <4=> NRF_CLOCK_LF_ACCURACY_75_PPM
// <5=> NRF_CLOCK_LF_ACCURACY_50_PPM
// <6=> NRF_CLOCK_LF_ACCURACY_30_PPM
// <7=> NRF_CLOCK_LF_ACCURACY_20_PPM
// <8=> NRF_CLOCK_LF_ACCURACY_10_PPM
// <9=> NRF_CLOCK_LF_ACCURACY_5_PPM
// <10=> NRF_CLOCK_LF_ACCURACY_2_PPM
// <11=> NRF_CLOCK_LF_ACCURACY_1_PPM
#ifndef NRF_SDH_CLOCK_LF_ACCURACY
#define NRF_SDH_CLOCK_LF_ACCURACY 1
#endif
```

Note that when you choose to use the RC oscillator, it will add around 2uA average current consumption compared to a 20ppm external crystal.
ANT specification requires +/-50ppm accuracy for 32.768kHz clock. There is a possibility that the internal RC oscillator does not meet to the specification.

Copyright 2023 KAGA FEI Co., Ltd.

Downloaded from Arrow.com.