LDK120

200 mA low quiescent current very low noise LDO

Datasheet - production data

SOT23-5L

DFN6 (1.2 x 1.3 mm)

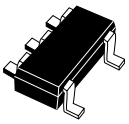

SOT323-5L

Features

- Input voltage from 1.9 to 5.5 V
- Very low dropout voltage (100 mV typ. at 100 mA load)
- Low quiescent current (max. 100 µA, 1 µA in OFF mode)
- Very low noise
- Output voltage tolerance: ± 2.0% @ 25 °C
- 200 mA guaranteed output current
- Wide range of fixed output voltages available on request: from 0.8 V to 3.5 V with 100 mV step
- Adjustable version: from 0.8 V to V_{IN}-V_{drop}
- Logic-controlled electronic shutdown
- Compatible with ceramic capacitor C_{OUT} = 1 µF
- Internal current and thermal limit
- Available in SOT23-5L, SOT323-5L and DFN6 (1.2 x 1.3 mm) packages
- Temperature range: -40 °C to 125 °C

Applications

- Mobile phones
- Personal digital assistants (PDAs)
- Cordless phones and similar battery-powered systems
- Digital still cameras

Description

The LDK120 low drop voltage regulator provides 200 mA of maximum current from an input supply voltage in the range of 1.9 V to 5.5 V, with a typical dropout voltage of 100 mV.

It is stabilized with a ceramic capacitor on the output.

The very low drop voltage, low quiescent current and low noise features make it suitable for low power battery-powered applications.

An enable logic control function puts the LDK120 in shutdown mode allowing a total current consumption lower than 1 µA.

The device also includes a short-circuit constant current limiting and thermal protection.

This is information on a product in full production. www.st.com

Downloaded from Arrow.com.

Contents

1 Diagram 3

2 Pin configuration 4

3 Typical application 5

4 Maximum ratings 6

5 Electrical characteristics 7

6 Typical performance characteristics 9

7 Package mechanical data 14

8 Packaging mechanical data 20

9 Order codes 22

10 Revision history 23

Downloaded from Arrow.com.

1 Diagram

Figure 1. Block diagram

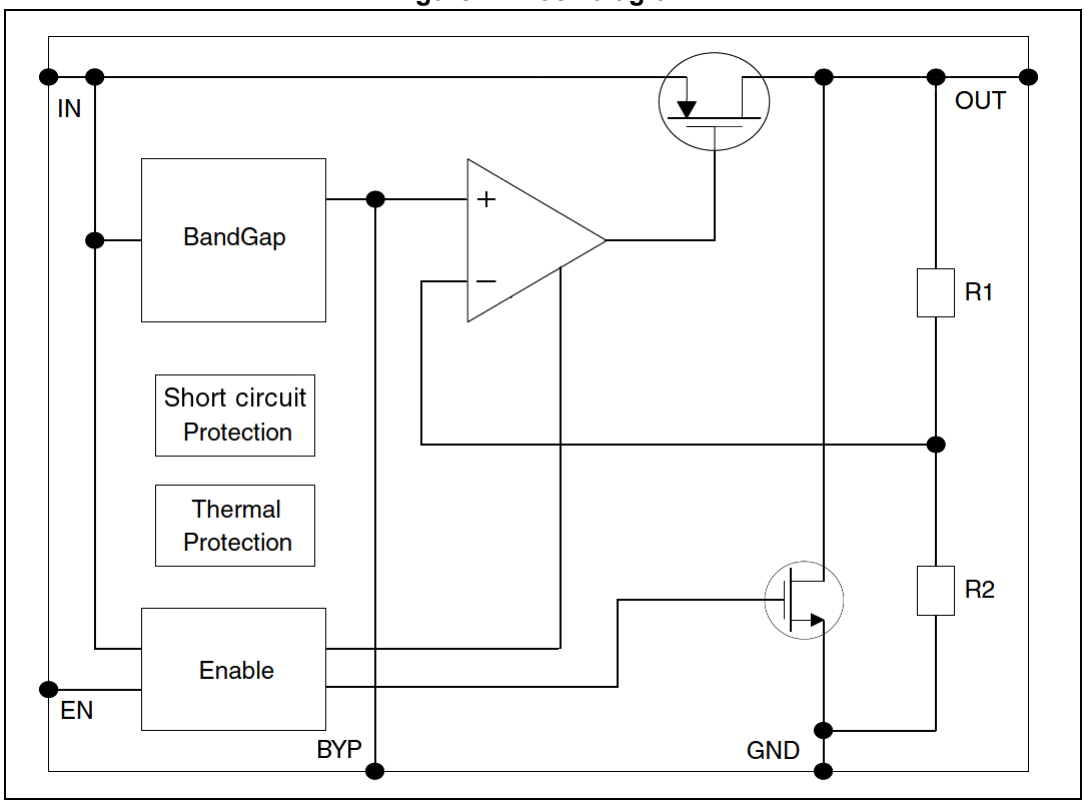

Downloaded from Arrow.com.

2 Pin configuration

Figure 2. Pin connection (top view)

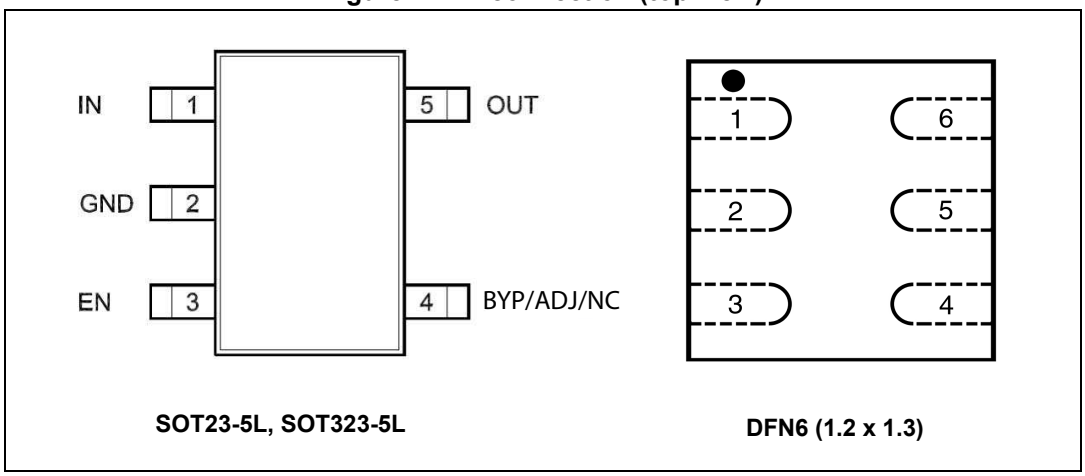

Table 1. Pin description (SOT23-5L, SOT323-5L)

Pin		Symbol	Function		
SOT23/ SOT323	DFN6		Fixed	Adjustable	D version
1	6	IN	Input voltage of the LDO		
2	2	GND	Common ground		
3	4	EN	Enable pin logic input: Low = shutdown, High = active		
4	3	BYP[1]/ADJ /NC	Bypass capacitor	Adjustable pin	Internally not connected
5	1	OUT	Output voltage of the LDO		
-	5	N/C	Not connected. This pin should be connected to GND		

1. Bypass capacitor for noise reduction on fixed version is optional, if not used the relevant pin must be left floating with no routing on the board.

Downloaded from Arrow.com.

3 Typical application

Figure 3. Typical application circuits for fixed version

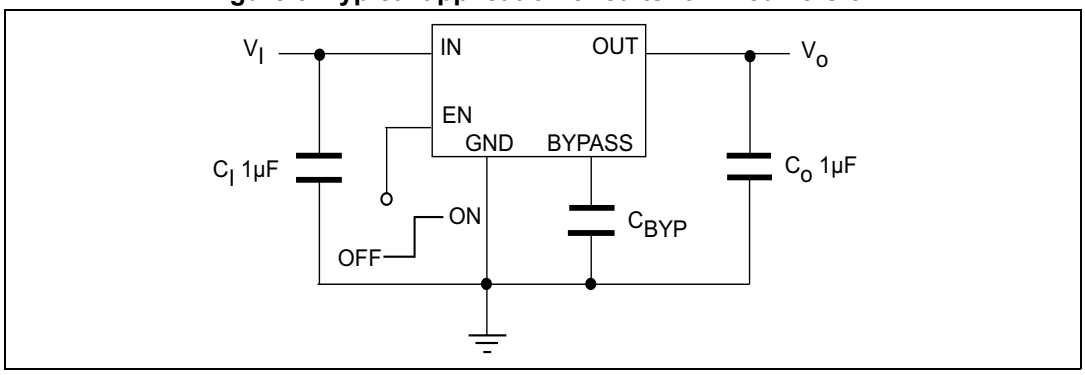

Figure 4. Typical application circuits for D version

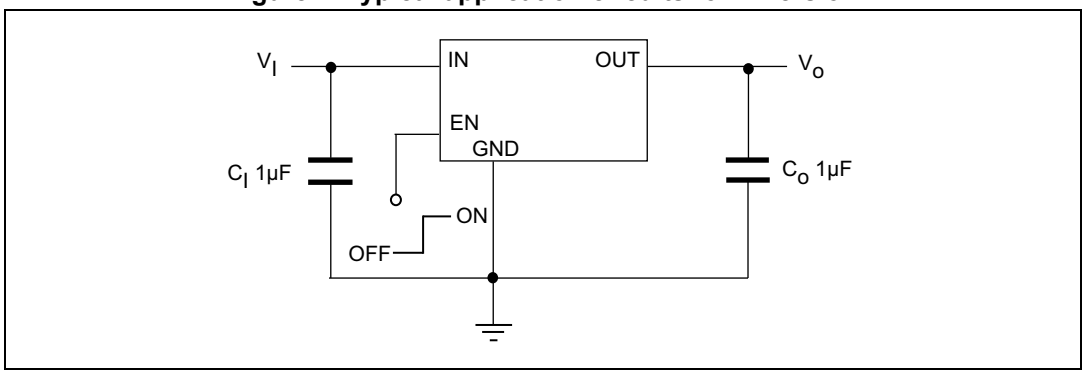

Figure 5. Typical application circuits for adjustable version

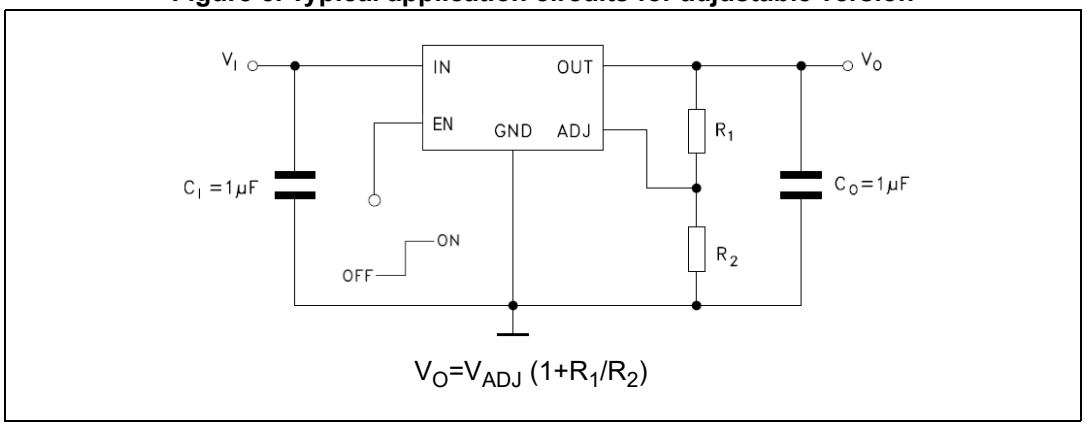

Downloaded from Arrow.com.

4 Maximum ratings

Table 2. Absolute maximum ratings

Symbol	Parameter	Value	Unit
V_{IN}	DC input voltage	- 0.3 to 7	V
V_{OUT}	DC output voltage	- 0.3 to V_I + 0.3	V
V_{EN}	Enable input voltage	- 0.3 to V_I + 0.3	V
$V_{BYP/ADJ}$	ADJ/Bypass pin voltage	2	V
I_{OUT}	Output current	Internally limited	mA
P_D	Power dissipation	Internally limited	mW
T_{STG}	Storage temperature range	- 65 to 150	°C
T_{OP}	Operating junction temperature range	- 40 to 125	°C

Note: Absolute maximum ratings are those values beyond which damage to the device may occur. Functional operation under these conditions is not implied. All values are referred to GND.

Table 3. Thermal data

Symbol	Parameter	SOT23-5L	SOT323-5L	DFN-6L	Unit
R_{thJA}	Thermal resistance junction-ambient	160	246	237	°C/W
R_{thJC}	Thermal resistance junction-case	68	134	104	°C/W

Downloaded from Arrow.com.

5 Electrical characteristics

T_J = 25 °C, V_{IN} = $V_{OUT(NOM)}$ + 1 V, C_{IN} = C_{OUT} = 1 µF, I_{OUT} = 1 mA, V_{EN} = V_{IN}, unless otherwise specified.

Table 4. Electrical characteristics for LDK120 (fixed version)

Symbol	Parameter	Test conditions	Min.	Typ.	Max.	Unit
V_{IN}	Operating input voltage		1.9		5.5	V
V_{OUT}	V_{OUT} accuracy	I_{OUT}=1 mA, T_J=25 °C	-2.0		2.0	%
		I_{OUT}=1 mA, -40 °C<T_J<125 °C	-3.0		3.0	%
ΔV_{OUT}	Static line regulation	V_{OUT} +1 V ≤ V_{IN} ≤ 5.5 V, I_{OUT}=1 mA		0.05		%/V
ΔV_{OUT}	Static load regulation	I_{OUT} = 1 mA to 200 mA		0.006		%/mA
V_{DROP}	Dropout voltage (1)	I_{OUT} = 100 mA, V_{OUT}=2.5 V		100		mV
		I_{OUT} = 200 mA, V_{OUT}=2.5 V 40 °C<T_J<125 °C		150	300	
e_N	Output noise voltage	10 Hz to 100 kHz, I_{OUT}=10 mA, V_{OUT}=2.5 V, C_{BYP}=10 nF		51		μV_{RMS}
e_N(2)	Output noise voltage	10 Hz to 100 kHz, I_{OUT}=10 mA, V_{OUT}=2.5 V		148		μV_{RMS}
SVR	Supply voltage rejection	V_{IN}=V_{OUTNOM}+0.5 V+/-V_{RIPPLE} V_{RIPPLE}=0.1 V Freq.=120 Hz to 10 kHz I_{OUT}=10 mA		55		dB
I_Q	Quiescent current	I_{OUT}=0 mA, -40 °C<T_J<125 °C		30	60	µA
		I_{OUT}=200 mA, -40 °C<T_J<125 °C		50	100	
		V_{IN} input current in OFF mode: V_{EN}=GND			1	
I_{SC}	Short-circuit current	R_L=0		400		mA
V_{EN}	Enable input logic low	V_{IN}=1.9 V to 5.5 V, -40 °C<T_J<125 °C			0.4	V
	Enable input logic high	V_{IN}=1.9 V to 5.5 V, -40 °C<T_J<125 °C	1.2			
I_{EN}	Enable pin input current	V_{SHDN}=V_{IN}			100	nA
T_{SHDN}	Thermal shutdown			160		°C
	Hysteresis			20		
C_{OUT}	Output capacitor	Capacitance (see *Section 6: Typical performance characteristics*)	1		22	µF

1. Dropout voltage is the input-to-output voltage difference at which the output voltage is 100 mV below its nominal value.
2. Valid for D version or standard version without C_{BYP}.

Downloaded from Arrow.com.

T_J = 25 °C, V_{IN} = $V_{OUT(NOM)}$ + 1 V, C_{IN} = C_{OUT} = 1 µF, I_{OUT} = 1 mA, V_{EN} = V_{IN}, unless otherwise specified.

Table 5. Electrical characteristics for LDK120 (adjustable version)

Symbol	Parameter	Test conditions	Min.	Typ.	Max.	Unit
V_{IN}	Operating input voltage		1.9		5.5	V
V_{ADJ}	V_{ADJ} accuracy	I_{OUT}=1 mA, T_J=25 °C	784	800	816	mV
		I_{OUT}=1 mA, -40 °C<T_J<125 °C	-3.0		3.0	%
ΔV_{OUT}	Static line regulation	V_{OUT} +1 V ≤ V_{IN} ≤ 5.5 V, I_{OUT}=1 mA		0.05		%/V
ΔV_{OUT}	Static load regulation	I_{OUT}=1 mA to 200 mA		0.006		%/mA
V_{DROP}	Dropout voltage (1)	I_{OUT}=100 mA, V_{OUT}=2.5 V		100		mV
		I_{OUT} = 200 mA, V_{OUT}=2.5 V 40 °C<T_J<125 °C,		150	300	
e_N	Output noise voltage	10 Hz to 100 kHz, I_{OUT}=10 mA V_{OUT}=V_{ADJ}		115		µV_{RMS}
I_{ADJ}	Adjust pin current				1	µA
SVR	Supply voltage rejection	V_{IN}=V_{OUTNOM}+0.5 V+/-V_{RIPPLE} V_{RIPPLE}=0.1 V Freq.=120 Hz to 10 kHz I_{OUT}=10 mA		55		dB
I_Q	Quiescent current	I_{OUT}=0 mA, -40 °C<T_J<125 °C		30	60	µA
		I_{OUT}=200 mA, -40 °C<T_J<125 °C		50	100	
		V_{IN} input current in OFF mode: V_{EN}=GND			1	
I_{SC}	Short-circuit current	R_L=0		400		mA
V_{EN}	Enable input logic low	V_{IN}=1.9 V to 5.5 V, -40 °C<T_J<125 °C			0.4	V
	Enable input logic high	V_{IN}=1.9 V to 5.5 V, -40 °C<T_J<125 °C	1.2			
I_{EN}	Enable pin input current	V_{SHDN}=V_{IN}			100	nA
T_{SHDN}	Thermal shutdown			160		°C
	Hysteresis			20		
C_{OUT}	Output capacitor	Capacitance (see *Section 6: Typical performance characteristics*)	1		22	µF

1. Dropout voltage is the input-to-output voltage difference at which the output voltage is 100 mV below its nominal value.

Downloaded from Arrow.com.

6 Typical performance characteristics

$C_{IN} = C_{OUT} = 1$ µF, V_{EN} to V_{IN}, unless otherwise specified.

Figure 6. Output voltage vs. temp. for adjustable (I_O = 1 mA)

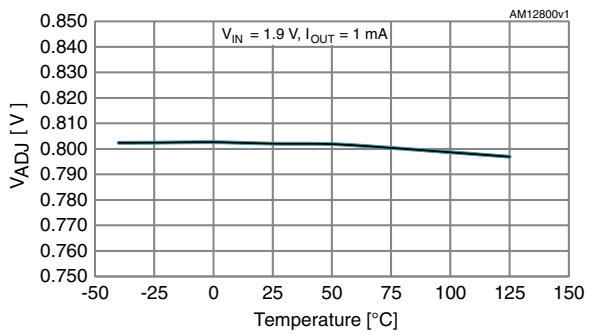

Figure 7. Output voltage vs. temp. for adjustable version (I_O = 200 mA)

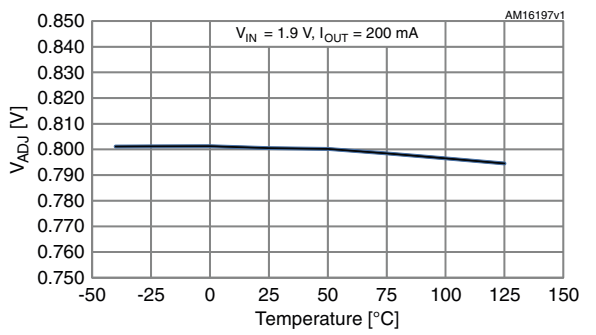

Figure 8. Output voltage vs. temp. for fixed version (I_O = 1 mA)

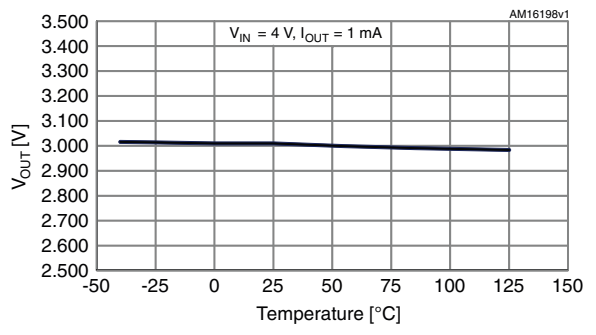

Figure 9. Output voltage vs. temp. for fixed version (I_O = 200 mA)

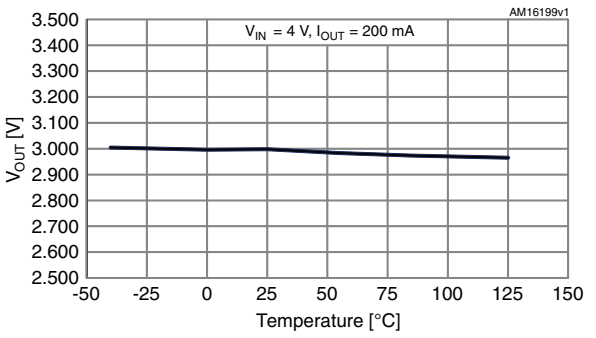

Figure 10. Line regulation vs. temp. for adjustable version

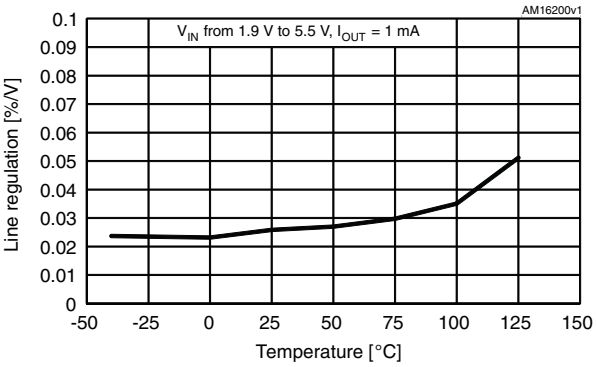

Figure 11. Short-circuit current vs. temp. for adjustable version

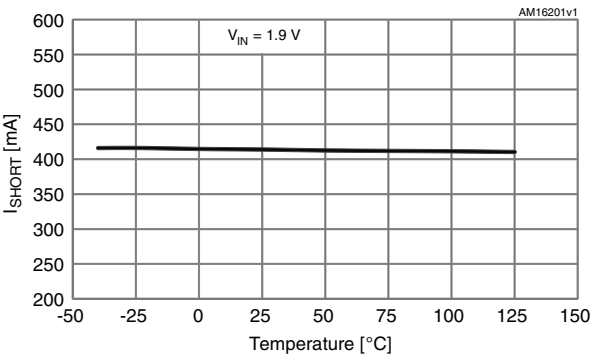

Downloaded from Arrow.com.

Figure 12. Load regulation vs. temp. for adjustable version

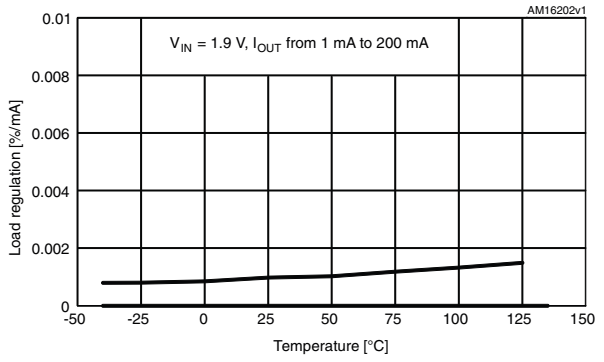

Figure 13. Load regulation vs. temp. for fixed version

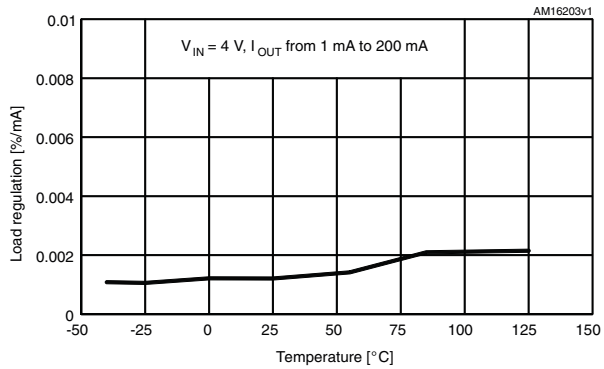

Figure 14. Enable pin thresholds vs. temp. (V_{IN} = 1.9 V)

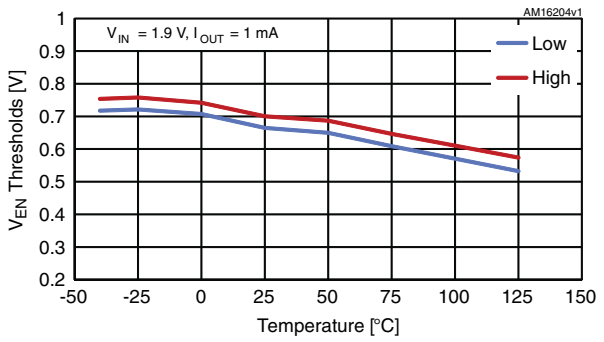

Figure 15. Enable pin thresholds vs. temp.

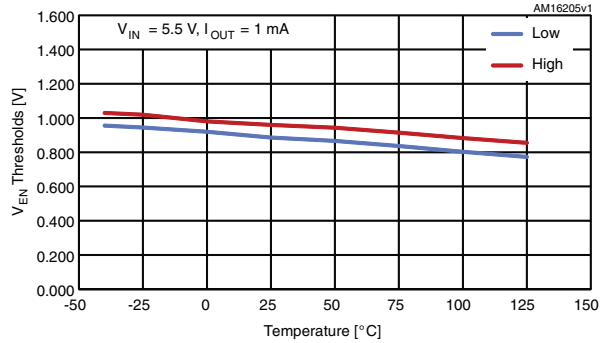

Figure 16. Quiescent current vs. temp. for adjustable version (I_O = 0 mA)

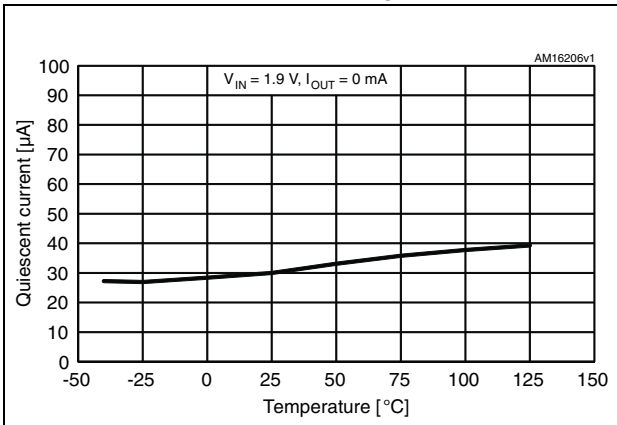

Figure 17. Quiescent current vs. temp. for adjustable version (I_O = 200 mA)

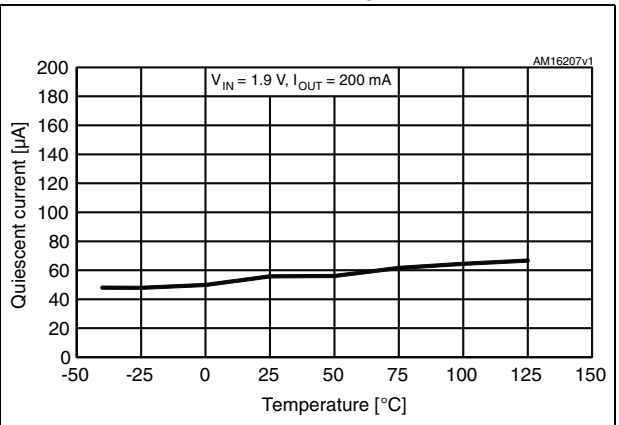

Downloaded from Arrow.com.

Figure 18. Quiescent current vs. temp. for fixed version (I_O = 0 mA)

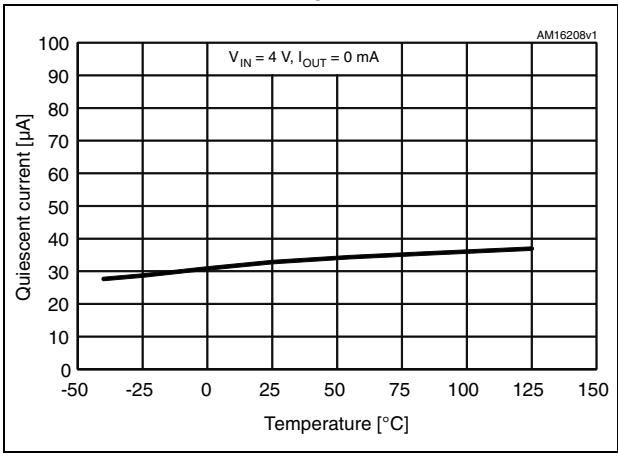

Figure 19. Quiescent current vs. temp. for fixed version (I_O = 200 mA)

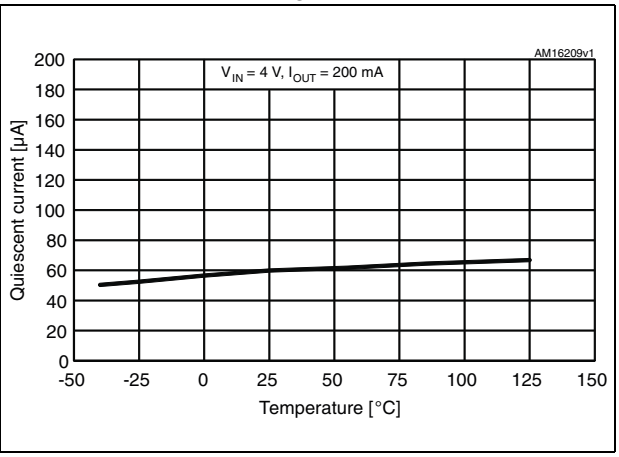

Figure 20. Shutdown current vs. temperature

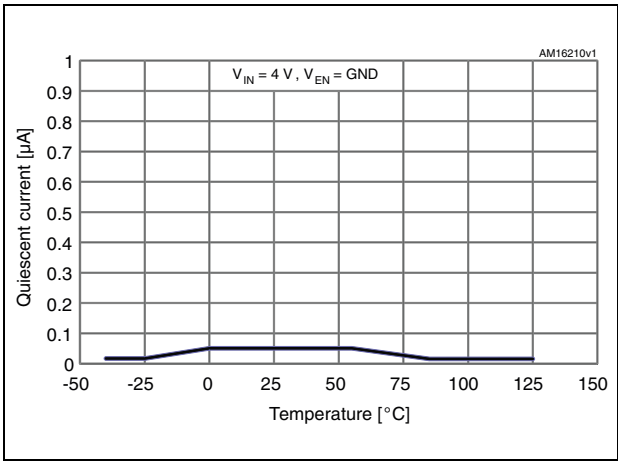

Figure 21. SVR vs. frequency (V_O = 2.5 V)

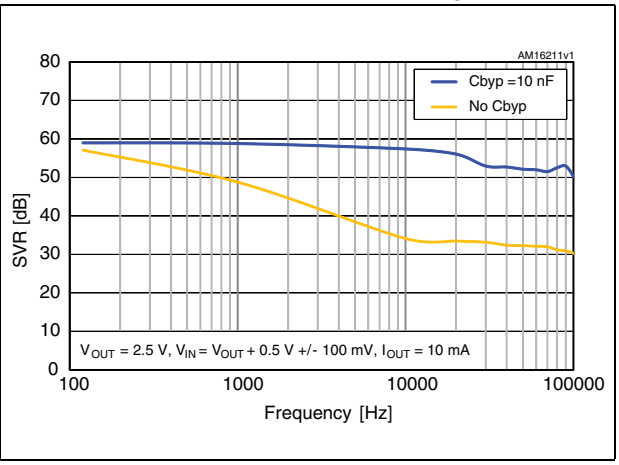

Figure 22. SVR vs. frequency (V_O = V_{ADJ})

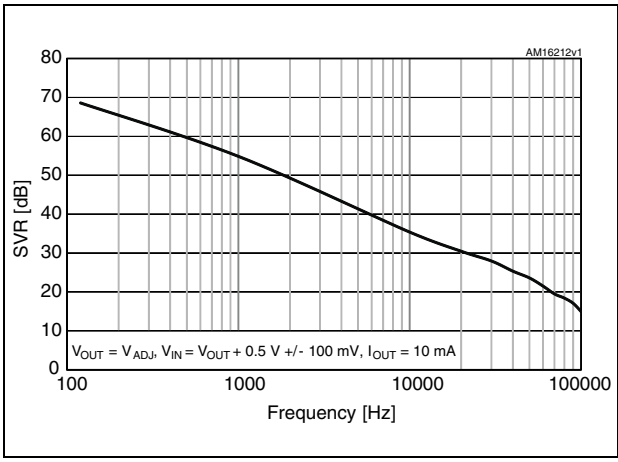

Figure 23. Output noise vs. frequency (V_O = 2.5 V)

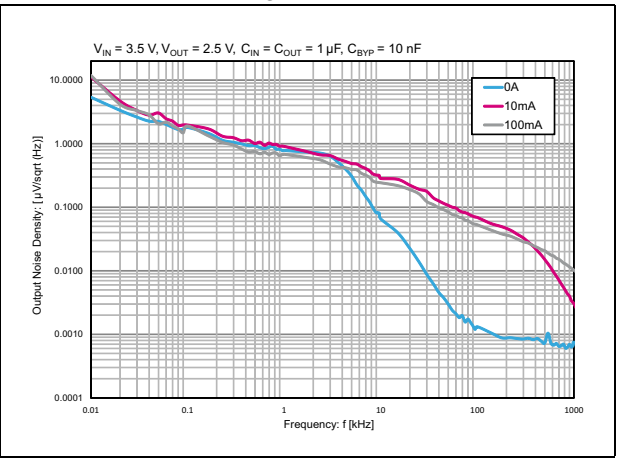

Downloaded from Arrow.com.

Figure 24. Output noise vs. frequency ($V_O = V_{ADJ}$)

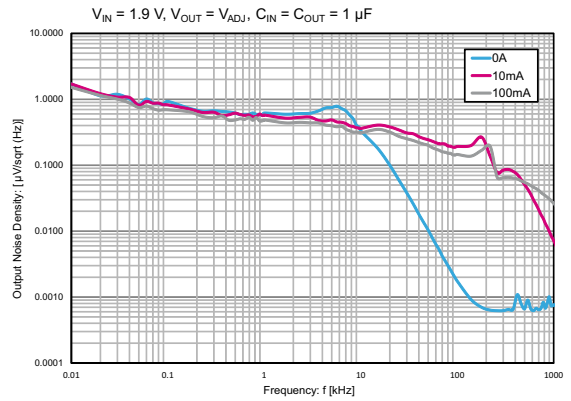

Figure 25. Stability region vs. C_{OUT} (fixed)

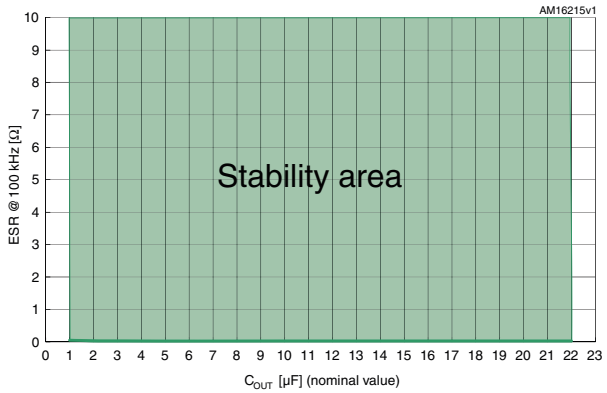

$V_{IN} = V_{EN}$ = 4 to 5.5 V, I_{OUT} = 10 mA to 0.2 A, C_{IN} = 1 µF, T_A = 25 °C

Figure 26. Stability region vs C_{OUT} (adjust.)

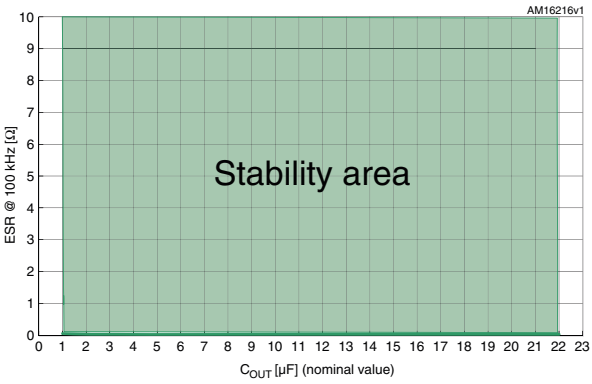

$V_{IN} = V_{EN}$ = 1.9 to 5.5 V, I_{OUT} = 10 mA to 0.2 A, C_{IN} = 1 µF, T_A = 25 °C

Figure 27. Line transient ($V_{OUT} = V_{ADJ}$)

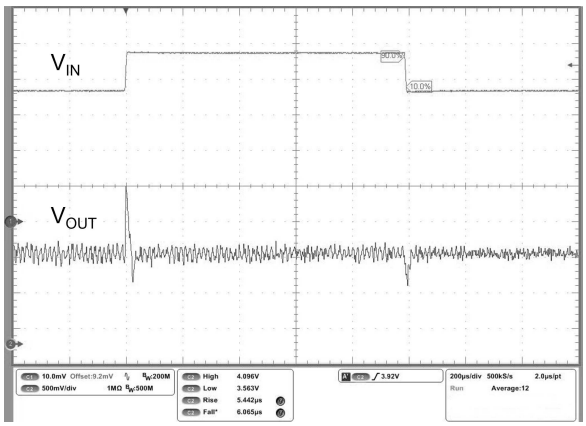

$V_{OUT} = V_{ADJ}$, V_{IN} = 3.5 V to 4 V, V_{EN} = 2 V, I_{OUT} = 1 mA, NO C_{IN}, C_{OUT} = 1 µF, $t_r = t_f$ = 5 µs

Figure 28. Line transient (V_{OUT} = 3 V)

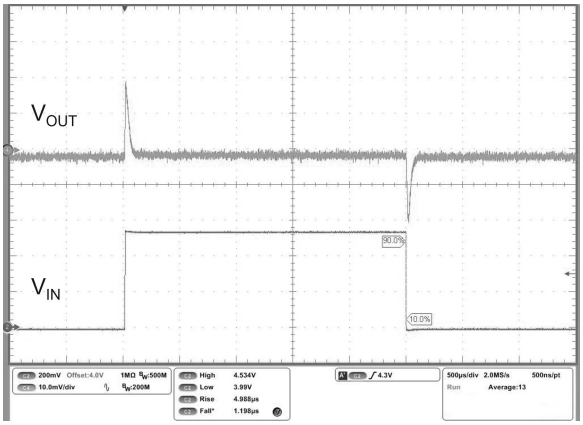

V_{OUT} = 3 V, V_{IN} = 4 V to 4.5 V, V_{EN} = 2 V, I_{OUT} = 1 mA, NO C_{IN}, C_{OUT} = 1 µF, $t_r = t_f$ = 5 µs

Figure 29. Load transient (V_{OUT} = 3 V)

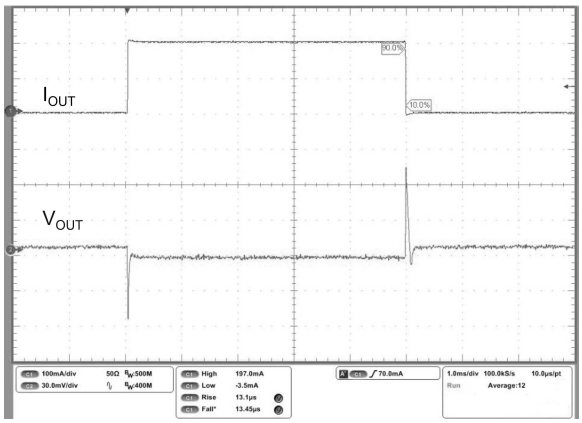

V_{OUT} = 3 V, $V_{IN} = V_{EN}$ = 3.5 V, I_{OUT} = 1 mA to 200 mA, C_{OUT} = 1 µF, $t_r = t_f$ = 5 µs

Downloaded from Arrow.com.

Figure 30. Load transient ($V_{OUT} = V_{ADJ}$)

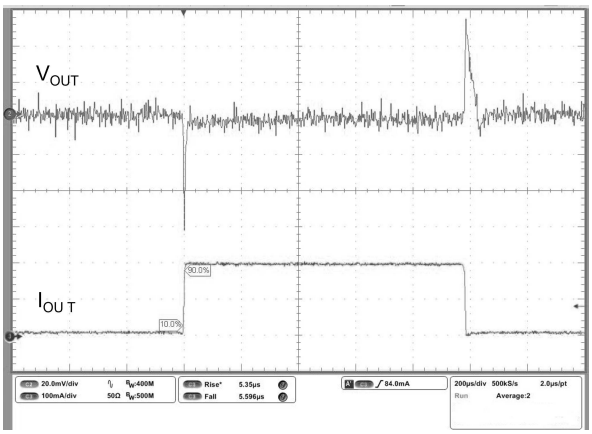

$V_{OUT} = V_{ADJ}$, $V_{IN} = V_{EN} = 3.5$ V, $I_{OUT} = 1$ mA to 200 mA, $C_{OUT} = 1$ µF, $t_r = t_f = 5$ µs

Figure 31. Startup transient

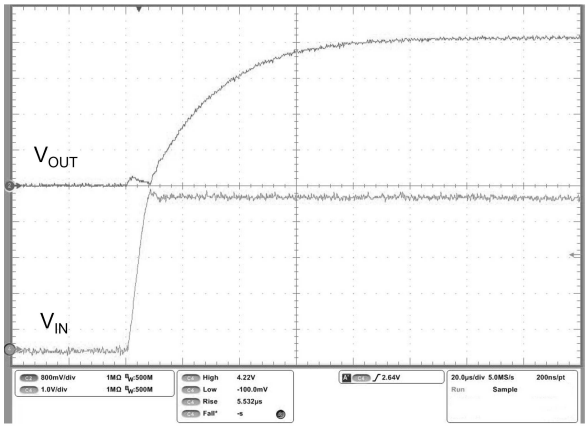

$V_{OUT} = 3$ V, $V_{IN} = V_{EN} = 0$ to 4.2 V, $I_{OUT} = 1$ mA, $C_{IN} = C_{OUT} = 1$ µF, $t_r = t_f = 5$ µs

Figure 32. Enable transient ($V_{OUT} = V_{ADJ}$)

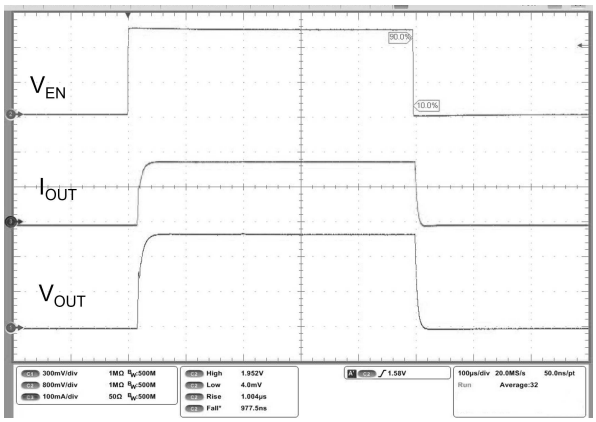

V_{OUT} @ 0.8 V, $V_{IN} = 1.9$, $V_{EN} = 0$ to V_{IN}, $I_{OUT} = 200$ mA, $C_{OUT} = 1$ µF, $t_r = t_f = 1$ µs

Figure 33. Enable transient ($V_{OUT} = 3$ V)

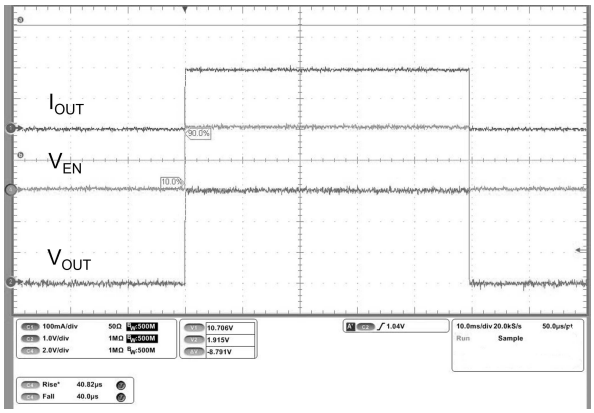

$V_{IN} = 4$ V, $V_{EN} = 0$ to V_{IN}, $I_{OUT} = 200$ mA, $C_{IN} = C_{OUT} = 1$ µF, $t_r = t_f = 1$ µs

Figure 34. Dropout voltage vs. temperature ($I_{OUT} = 100$ mA)

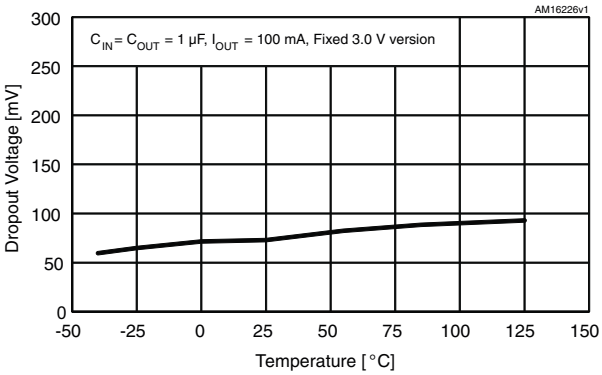

Figure 35. Dropout voltage vs. temperature ($I_{OUT} = 200$ mA)

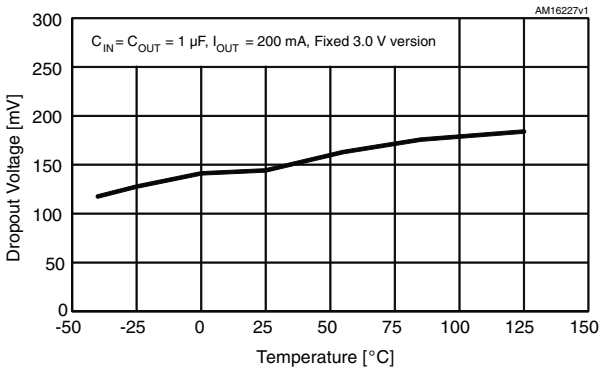

Downloaded from Arrow.com.

7 Package mechanical data

In order to meet environmental requirements, ST offers these devices in different grades of ECOPACK packages, depending on their level of environmental compliance. ECOPACK specifications, grade definitions and product status are available at: *www.st.com*. ECOPACK is an ST trademark.

Figure 36. SOT23-5L mechanical drawing

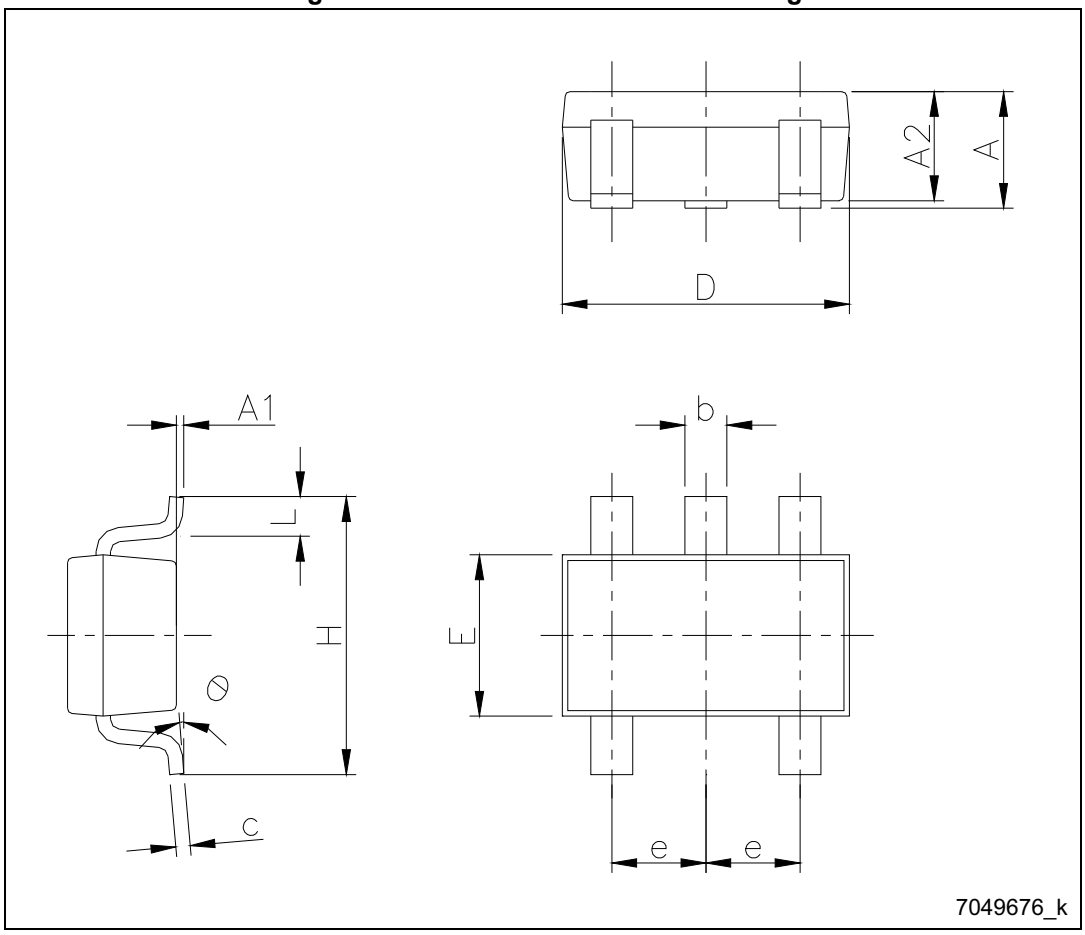

Downloaded from Arrow.com.

Table 6. SOT23-5L mechanical data

Dim.	mm		
	Min.	Typ.	Max.
A	0.90		1.45
A1	0		0.15
A2	0.90		1.30
b	0.30		0.50
c	0.09		0.20
D		2.95	
E		1.60	
e		0.95	
H		2.80	
L	0.30		0.60
θ	0		8

Figure 37. SOT23-5L footprint (dimensions in mm)

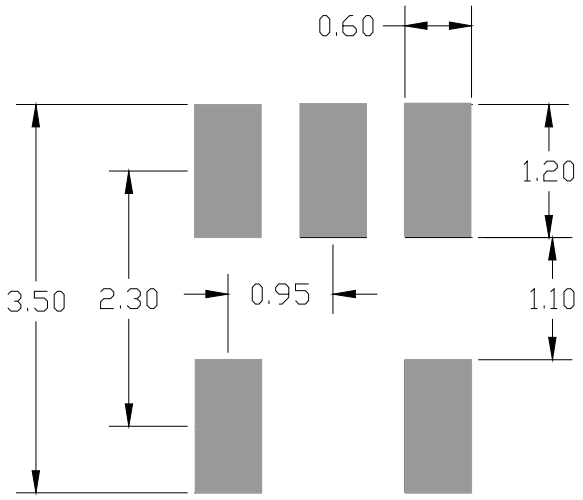

Downloaded from Arrow.com.

Figure 38. DFN6L (1.2 x 1.3 mm) drawing

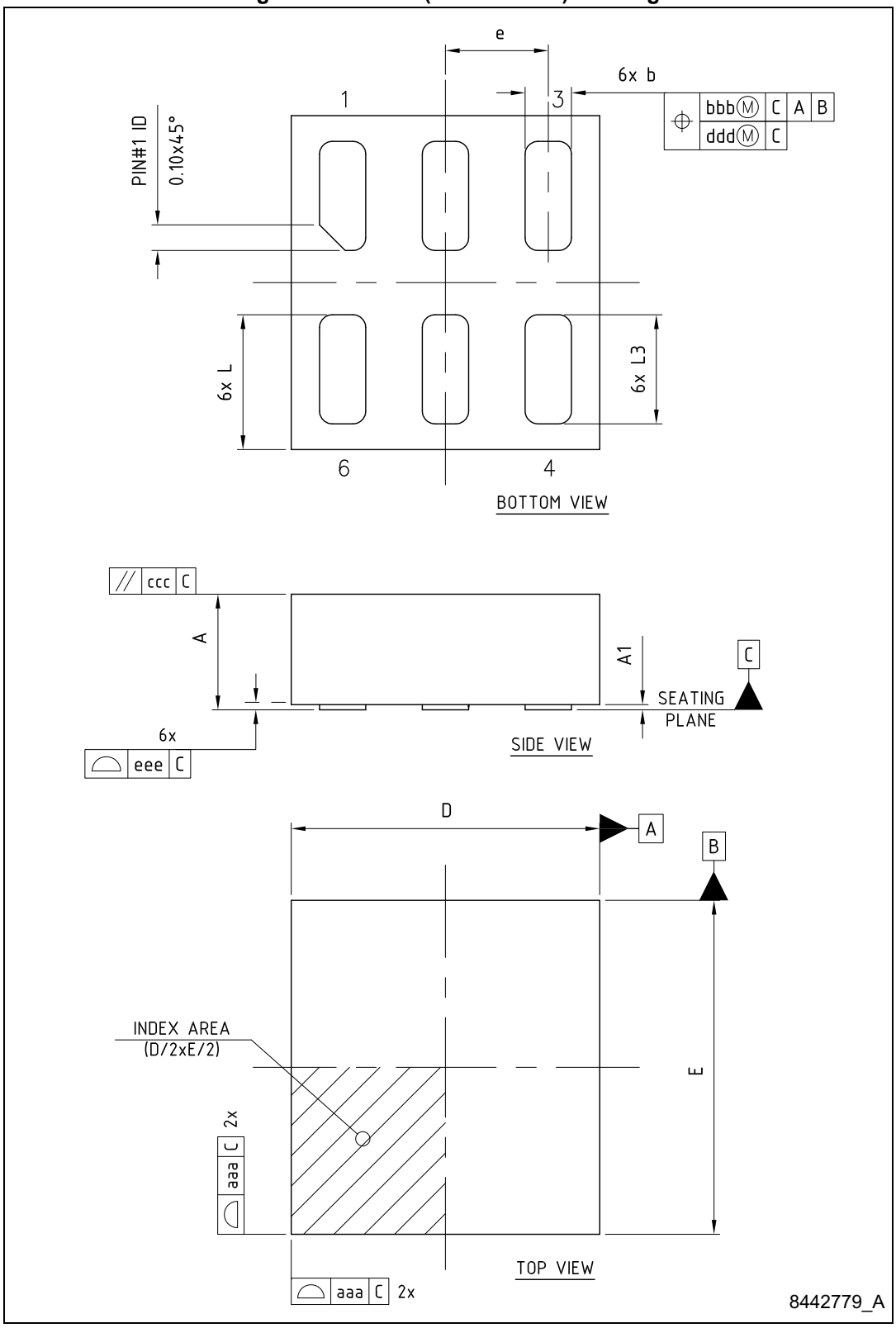

Downloaded from Arrow.com.

Table 7. DFN6L (1.2 x 1.3 mm) mechanical data

Dim.	mm		
	Min.	Typ.	Max.
A	0.41	0.45	0.50
A1	0.00	0.02	0.05
D	-	1.20	-
E	-	1.30	-
e	-	0.40	-
b	0.15	0.18	0.25
L	0.475	0.525	0.575
L3	0.375	0.425	0.475
aaa	-	0.05	-

Figure 39. DFN6L footprint (dimensions in mm)

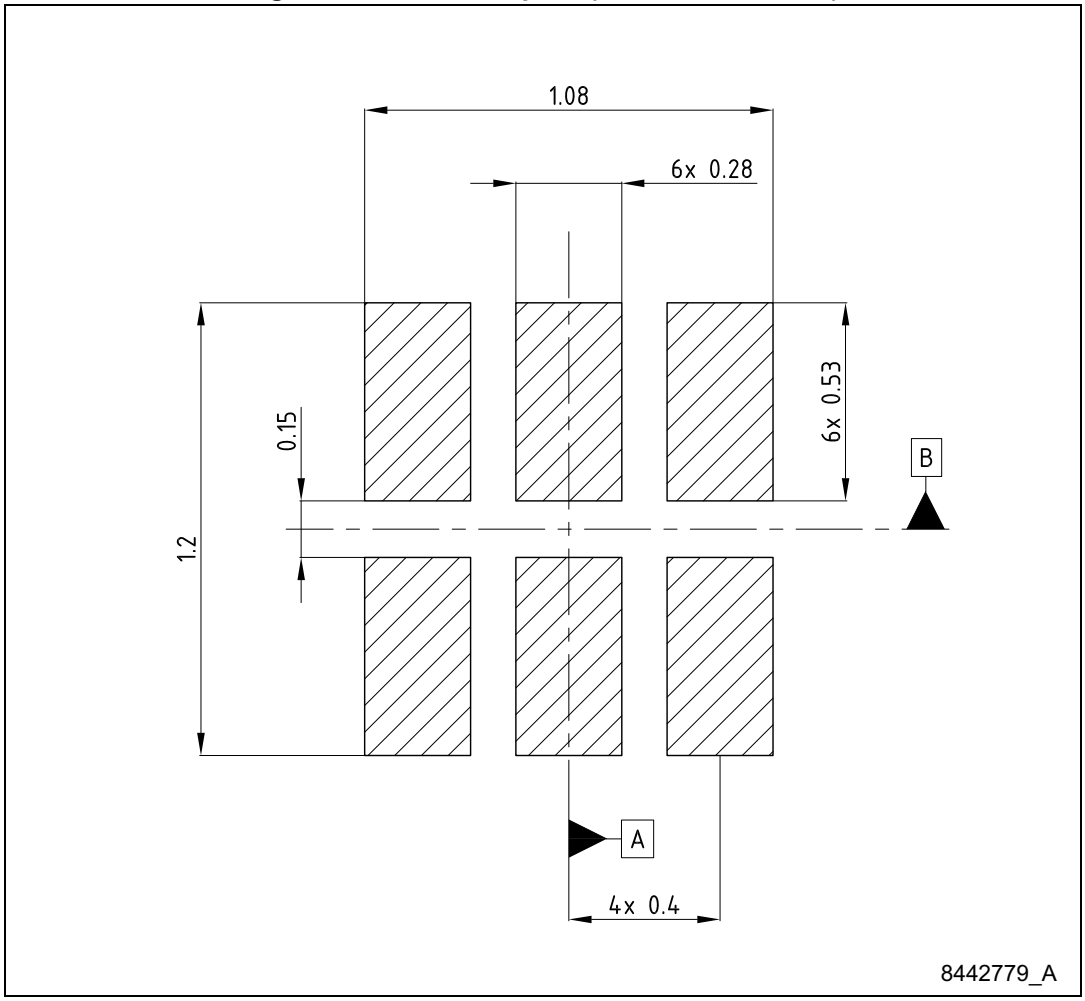

Downloaded from Arrow.com.

Figure 40. SOT323-5L drawing

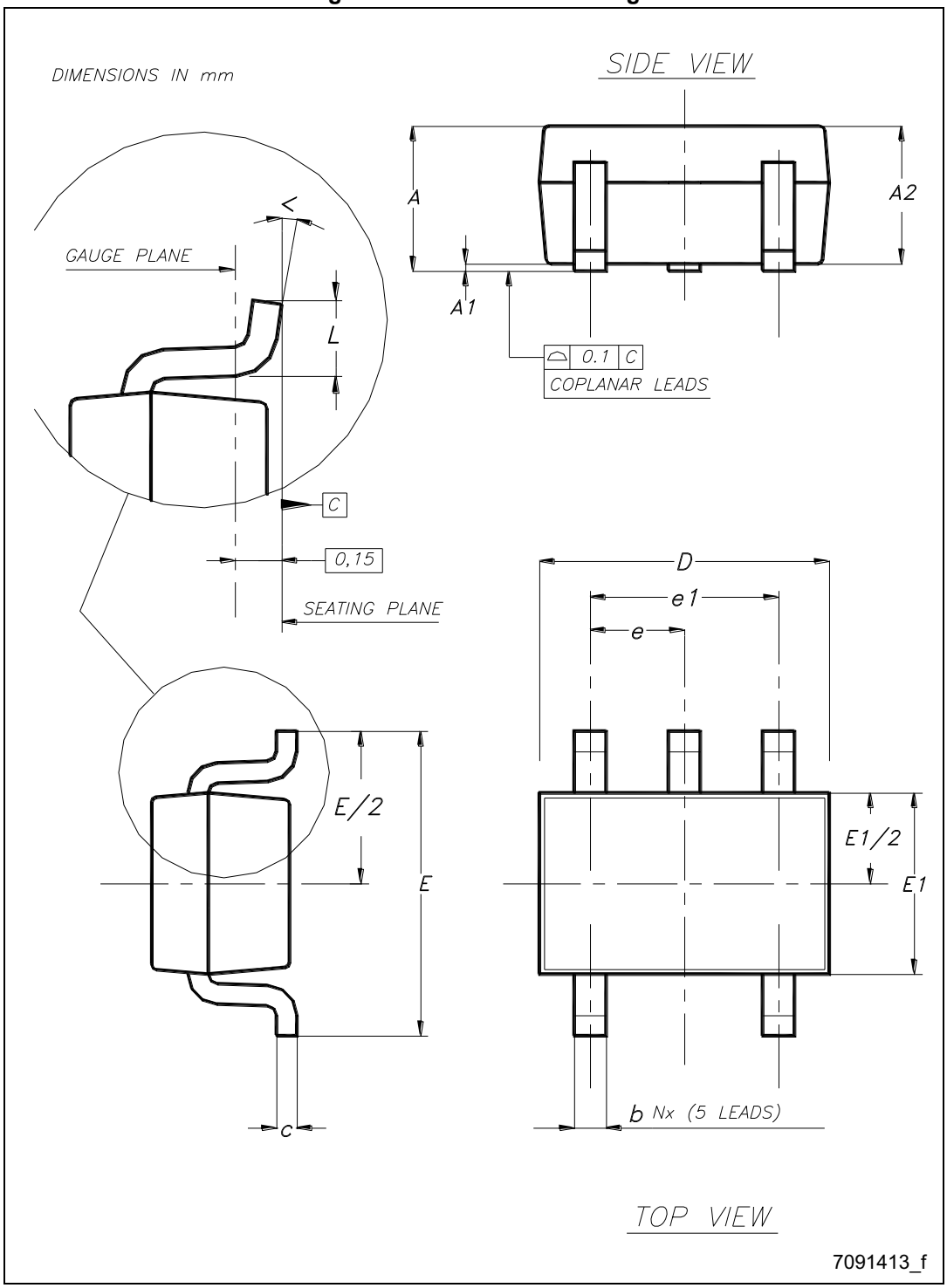

Downloaded from Arrow.com.

Table 8. SOT323-5L mechanical data

Dim.	mm		
	Min.	Typ.	Max.
A	0.80		1.10
A1	0		0.10
A2	0.80	0.90	1
b	0.15		0.30
c	0.10		0.22
D	1.80	2	2.20
E	1.80	2.10	2.40
E1	1.15	1.25	1.35
e		0.65	
e1		1.30	
L	0.26	0.36	0.46
<	0°		8°

Downloaded from Arrow.com.

8 Packaging mechanical data

Figure 41. SOT23-5L and SOT323-xL tape and reel drawing

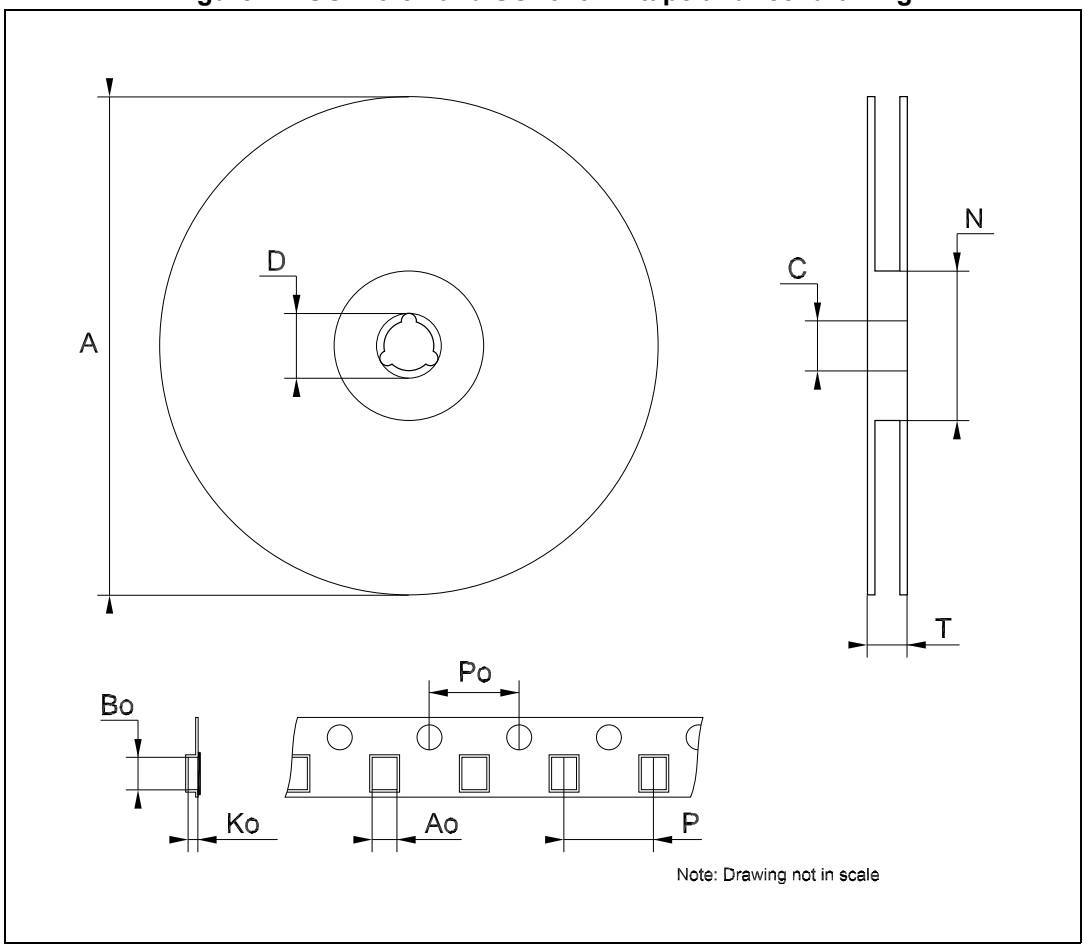

Downloaded from Arrow.com.

Table 9. SOT23-5L tape and reel mechanical data

Dim.	mm		
	Min.	Typ.	Max.
A			180
C	12.8	13.0	13.2
D	20.2		
N	60		
T			14.4
Ao	3.13	3.23	3.33
Bo	3.07	3.17	3.27
Ko	1.27	1.37	1.47
Po	3.9	4.0	4.1
P	3.9	4.0	4.1

Table 10. SOT323-xL tape and reel mechanical data

Dim.	mm		
	Min.	Typ.	Max.
A	175	180	185
C	12.8	13	13.2
D	20.2		
N	59.5	60	60.5
T			14.4
Ao		2.25	
Bo		3.17	
Ko		1.2	
Po	3.9	4.0	4.1
P	3.9	4.0	4.2

Downloaded from Arrow.com.

9 Order codes

Table 11. Order codes

Package			Output voltage
SOT323-5L	SOT23-5L	DFN6L	
LDK120C-R	LDK120M-R	LDK120PU-R	ADJ
LDK120C08R	LDK120M08R	LDK120PU08R	0.8 V
LDK120C10R	LDK120M10R	LDK120PU10R	1.0 V
LDK120C11R	LDK120M11R		1.1 V
LDK120C12R	LDK120M12R	LDK120PU12R	1.2 V
LDK120C15R	LDK120M15R		1.5 V
LDK120C18R	LDK120M18R	LDK120PU18R	1.8 V
LDK120C25R	LDK120M25R	LDK120PU25R	2.5 V
LDK120C28R	LDK120M28R		2.8 V
LDK120C29R	LDK120M29R	LDK120PU29R	2.9 V
LDK120C30R	LDK120M30R	LDK120PU30R	3.0 V
LDK120C31R	LDK120M31R		3.1 V
LDK120C32R	LDK120M32R	LDK120PU32R	3.2 V
	LDK120DM33R		3.3 V
LDK120C33R	LDK120M33R	LDK120PU33R	3.3 V
LDK120C35R			3.5 V

Table 12. Marking

Order codes	Package	Output voltage	Marking
LDK120DMxxR	SOT23-5L	xx V	Dxx
LDK120MxxR	SOT23-5L	xx V	Kxx
LDK120CxxR	SOT323-5L	xx V	Kxx
LDK120PUxxR	DFN-6L	xx V	xx
LDK120M-R	SOT23-5L	Adj	KAD
LDK120C-R	SOT323-5L	Adj	KAD
LDK120PU-R	DFN-6L	Adj	AD

Downloaded from Arrow.com.

10 Revision history

Table 13. Document revision history

Date	Revision	Changes
26-Nov-2012	1	Initial release
31-Jan-2013	2	Added new part number LDK120PU32R Updated Table 11: Order codes
18-Oct-2013	3	RPN LDK120xx changed to LDK120. Updated the Features and the Description in cover page. Cancelled Table1: Device summary. Updated Section 7: Package mechanical data, Table 2: Absolute maximum ratings and Table 11: Order codes. Added Section 8: Packaging mechanical data.. Minor text changes.
10-Mar-2014	4	Updated Table 11: Order codes.
29-Apr-2014	5	Updated Table 1: Pin description (SOT23-5L, SOT323-5L), Table 4: Electrical characteristics for LDK120 (fixed version), Table 5: Electrical characteristics for LDK120 (adjustable version), Table 11: Order codes and Table 12: Marking. Added Figure 4: Typical application circuits for D version. Minor text changes.
29-Aug-2014	6	Updated Table 6: SOT23-5L mechanical data and Table 11: Order codes.
07-Oct-2014	7	Updated Table 11: Order codes. Minor text changes.
19-Jan-2018	8	Updated: Figure 23: Output noise vs. frequency (VO = 2.5 V) and Figure 24: Output noise vs. frequency (VO = VADJ).
28-Jul-2026	9	Updated: *Figure 27*, *Figure 28*, *Figure 29*, *Figure 30*, *Figure 31*, *Figure 32* and *Figure 33*.

Downloaded from Arrow.com.

IMPORTANT NOTICE – PLEASE READ CAREFULLY

STMicroelectronics NV and its subsidiaries (“ST”) reserve the right to make changes, corrections, enhancements, modifications, and improvements to ST products and/or to this document at any time without notice.

In the event of any conflict between the provisions of this document and the provisions of any contractual arrangement in force between the purchasers and ST, the provisions of such contractual arrangement shall prevail.

The purchasers should obtain the latest relevant information on ST products before placing orders. ST products are sold pursuant to ST’s terms and conditions of sale in place at the time of order acknowledgment.

The purchasers are solely responsible for the choice, selection, and use of ST products and ST assumes no liability for application assistance or the design of the purchasers’ products.

No license, express or implied, to any intellectual property right is granted by ST herein.

Resale of ST products with provisions different from the information set forth herein shall void any warranty granted by ST for such product.

If the purchasers identify an ST product that meets their functional and performance requirements but that is not designated for the purchasers' market segment, the purchasers shall contact ST for more information.

ST and the ST logo are trademarks of ST. For additional information about ST trademarks, please refer to *www.st.com/trademarks*. All other product or service names are the property of their respective owners.

Information in this document supersedes and replaces information previously supplied in any prior versions of this document.

© 2026 STMicroelectronics – All rights reserved

Downloaded from Arrow.com.