REVISIONS			
REV.	DESCRIPTION	DATE	BY
A1	RELEASE	8/23/2024	CE
A2	ADDED 3/8-16 FLANGE NUT	9/24/2025	CE
A3	CHANGED 3/8-16 NUT TO 3/8-16 FLANGE NUT	10/20/2025	CE

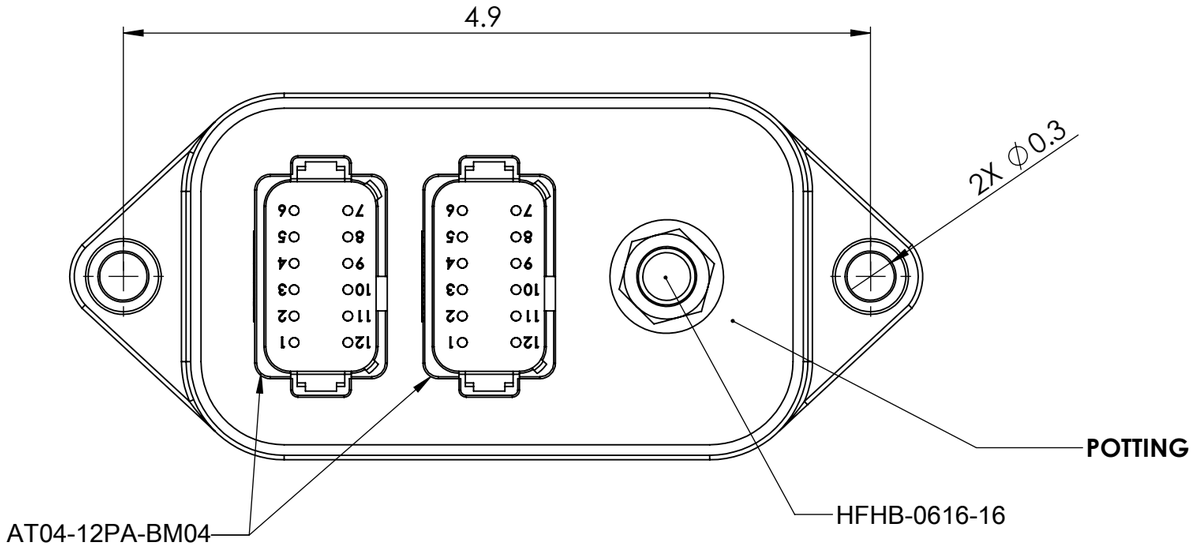

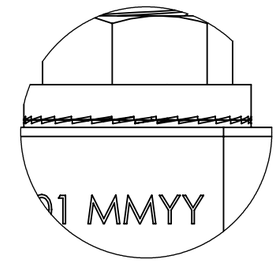

DETAIL B
SCALE 2 : 1

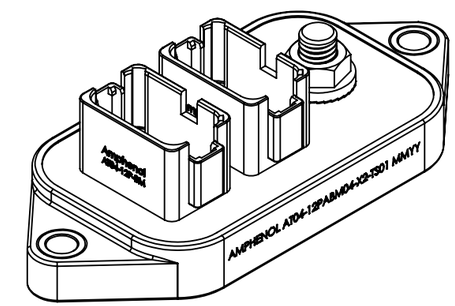

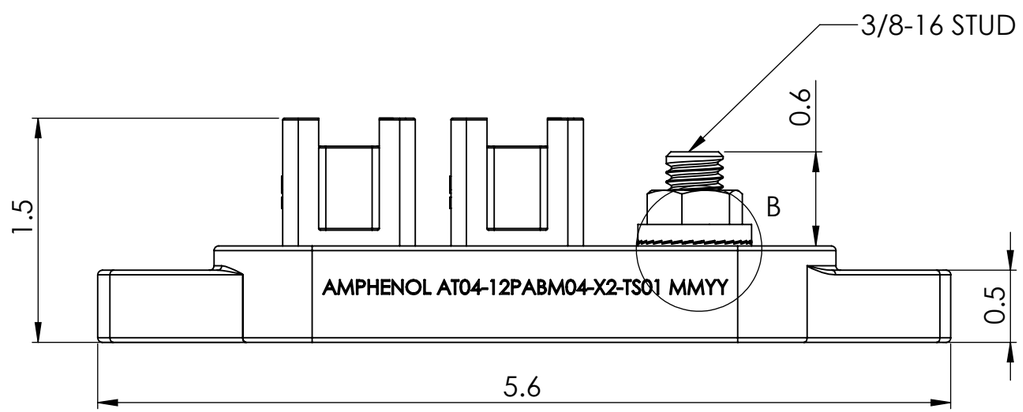

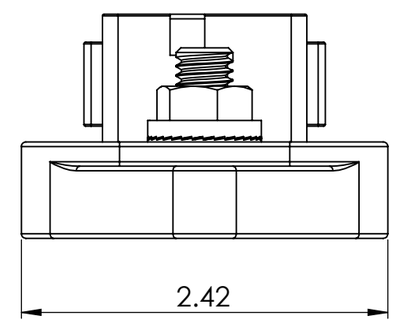

NOTES: UNLESS OTHERWISE SPECIFIED

1. MATERIAL:
   HOUSING: THERMOPLASTIC
   CONTACT: COPPER ALLOY
   SLEEVE: ALUMINUM; BLACK ANNODIZED
2. MODIFICATIONS: ALL 25 PINS BUSSED TOGETHER.
3. SPECIFICATIONS:
   3.1 CURRENT RATING: (HFHB-0616-16) 225 AMPS MAX.
   (AT04-12PA-BM04) 13 AMPS MAX PER PIN.
   3.2 OPERATING TEMPERATURE: -55°C TO +125°C
   3.3 DIELECTRIC WITHSTANDING VOLTAGE: LESS THAN 2 MILLIAMPS CURRENT LEAKAGE @ 1500 VOLTS AC.
   3.4 INSULATION RESISTANCE: 1000 MEGOHMS MIN @ 25°C.
   3.5 IP68 (1M of water for a period of 24 hours, in mated condition) IP69K (in mated condition)
   3.6 MATING CYCLE DURABILITY: 100 CYCLES
   3.7 RoHS COMPLIANT
4. MATING PART:
   3/8-16 STUD
   AT04-12PA-BM04: AT06-12SA-XXXX
5. ALL DIMENSIONS ARE FOR REFERENCE USE ONLY.

UNLESS OTHERWISE SPECIFIED:
1) DIMENSIONS ARE IN METRIC(mm)
2) TOLERANCES ARE AS FOLLOWS:
1 PL DEC: ± 0.5 | FRACTIONAL: ± 1/8
2 PL DEC: ± 0.25 | ANGLES: ± 1°
3 PL DEC: ± 0.1
3) NOTE REFERENCE = △

MATERIAL SPECIFICATIONS:

WEIGHT:

DO NOT SCALE DRAWING

SIGNATURES		DATE
DRAWN:	CE	7/15/2024
CHECKED:		
ENGINEER:		
APPROVAL:		

THIS DRAWING IS SUPPLIED FOR INFORMATION ONLY. DESIGN FEATURES, SPECIFICATIONS AND PERFORMANCE DATA SHOWN HEREON ARE THE PROPERTY OF THE AMPHENOL CORPORATION. NO RIGHTS OF REPRODUCTION ARE IMPLIED. ALL DIMENSIONS ARE SUBJECT TO NORMAL MANUFACTURING VARIATIONS.

Amphenol
Sine Systems - www.amphenol-sine.com
44724 Morley Drive
Clinton Township, MI 48036

DESCRIPTION:
HYPERBUSS 225 AMP POWER SPLITTER STRAIGHT 24 POSITION, 16AWG, NICKEL CONTACTS, COPPER THREADED STUD, POTTED,

SIZE: B | DWG NO: AT04-12PABM04-X2-TS01 | REV: A3

SCALE: NONE | SHEET 1 OF 1

Downloaded from Arrow.com.