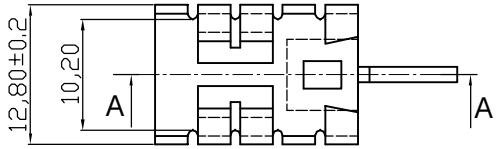

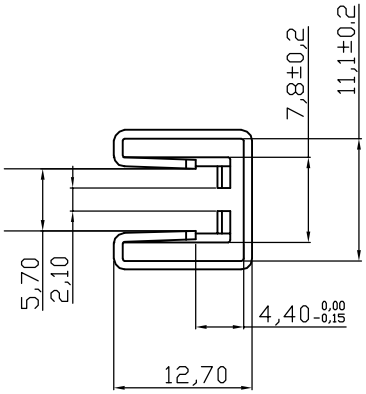

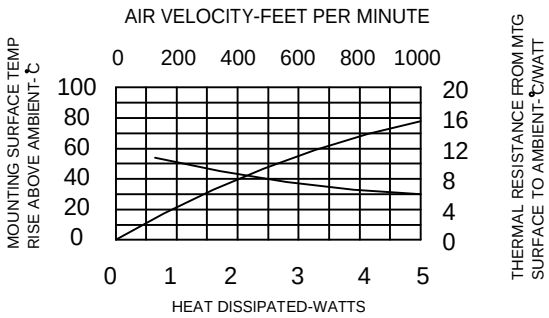

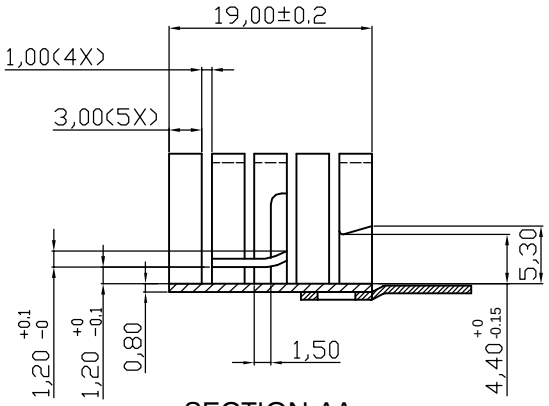

SECTION AA

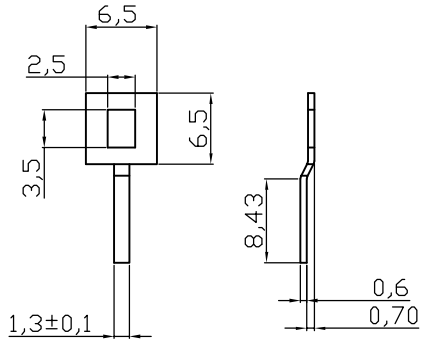

Notes
Material : AL 5052 T=0.8±0.1 MM
Finished : Black Anodize

② Thermal resistance : 21 K/W
Weight : 0,001KG

RoHS compliant
UNIT: mm

Scale	FREE					Date	Name	Customer-No.
TOLERANCE					Drawn	20.07.2006	Storb	
UNIT	±0.5				Approved	09.09.2011	Andy	ASSMANN WSW-No. V8508B-L
		②	Update	09.09.2011	Schulz			
DIM	TOL	①	Update	29.06.2011	Schulz			Drawing-No. ASS 0555 HS rev02
X.°	±X°	⓪	Drawn	20.07.2006	Storb			
X.X°	±X°							Replace / Sheet
Angle	TOL	Id.	Modification	Date	Name			

ASSMANN WSW components

Downloaded from Arrow.com.