XCL205/XCL206/XCL207 Series

ETR28036-001c

Inductor Built-in Step-Down “micro DC/DC” Converters

☆Green Operation Compatible

■GENERAL DESCRIPTION

The XCL205/XCL206/XCL207 series is a synchronous step-down micro DC/DC converter which integrates an inductor and a control IC in one tiny package (2.5mm×2.0mm, h=1.04mm). A stable power supply with an output current of 600mA is configured using only two capacitors connected externally.

Operating voltage range is from 2.0V to 6.0V(XCL20xG:1.8V~6.0V). Output voltage is internally set in a range from 0.8V to 4.0V in increments of 0.05V. The device is operated by 3.0MHz, and includes 0.42Ω P-channel driver transistor and 0.52Ω N-channel switching transistor. As for operation mode, the XCL205 series is PWM control, the XCL206 series is automatic PWM/PFM switching control and the XCL207 series can be manually switched between the PWM control mode and the0automatic PWM/PFM switching control mode, allowing fast response, low ripple and high efficiency over the full range of loads (from light load to heavy load). During stand-by, the device is shutdown to reduce current consumption to as low as 1.0μA or less. With the built-in UVLO (Under Voltage Lock Out) function, the internal driver transistor is forced OFF when input voltage becomes 1.4V or lower.

XCL205B (G, F)/XCL206B (G, F)/XCL207B (G, F) series provide short-time turn-on by the soft start function internally set in 0.25ms. XCL205B(C,G,F) /XCL206 B(C,G,F) / XCL207B(C,G,F) integrate C_L auto discharge function which enables the electric charge stored at the output capacitor C_L to be discharged via the internal auto-discharge switch located between the L_X and V_{SS} pins. When the devices enter stand-by mode, output voltage quickly returns to the V_{SS} level as a result of this function.

■APPLICATIONS

- ●Mobile phones, Smart phones
- ●Bluetooth Headsets
- ●WiMAX PDAs, MIDs, UMPCs
- ●Portable game consoles
- ●Digital cameras, Camcorders
- ●Electronic dictionaries

■FEATURES

Ultra-Small	: 2.5mm×2.0mm, h=1.04mm
Input Voltage	: 2.0V ~ 6.0V(A/B/C Type) 1.8V ~ 6.0V(G/F Type)
Output Voltage	: 0.8V ~ 4.0V (±2.0%)
High Efficiency	: 90% (V_{IN}=4.2V, V_{OUT}=3.3V)
Output Current	: 600mA
Oscillation Frequency	: 3.0MHz (±15%)
Maximum Duty Cycle	: 100%
Capacitor	: Low ESR Ceramic
CE Function	: Active High Soft-Start Circuit Built-In C_L High Speed Auto Discharge
Protection Circuits	: Current Limiter Circuit Built-In (Constant Current & Latching)
Control Methods	: PWM (XCL205) PWM/PFM Auto (XCL206) PWM/PFM Manual (XCL207)
Operating Ambient Temperature	: -40℃ ~ 85℃
Environmentally Friendly	: EU RoHS Compliant, Pb Free

■TYPICAL APPLICATION CIRCUIT

A/B/C/G Types

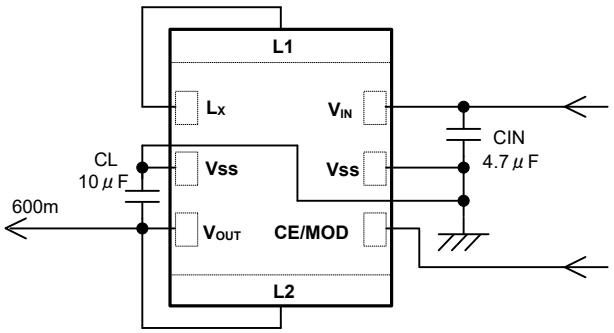

(TOP VIEW)

* “L1 and L_X”, and “L2 and V_{OUT}” is connected by wiring.

■TYPICAL PERFORMANCE CHARACTERISTICS

XCL205A333xx/XCL206A333xx/XCL207A333xx

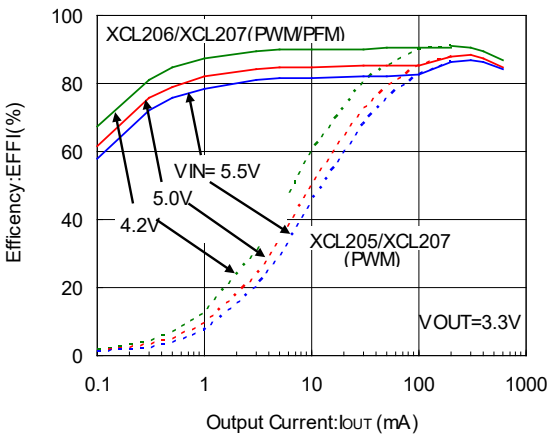

Downloaded from Arrow.com.

CL-2025 package : Discontinued.

■BLOCK DIAGRAM

1) A Type

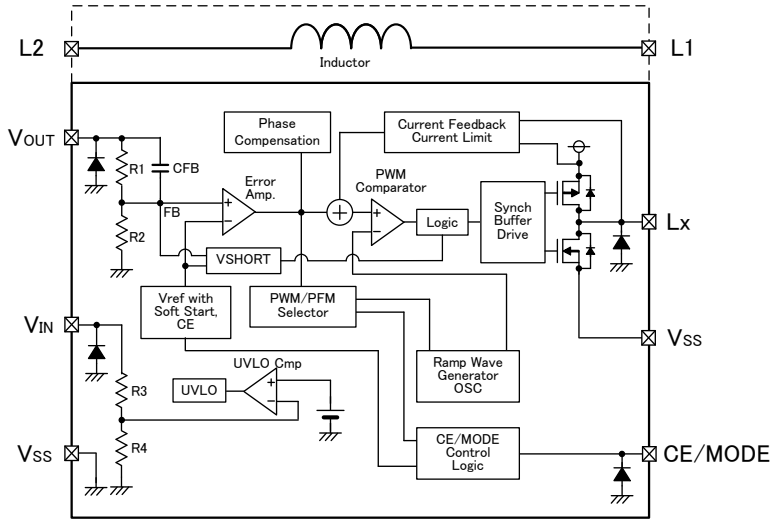

2) B/C/G Type

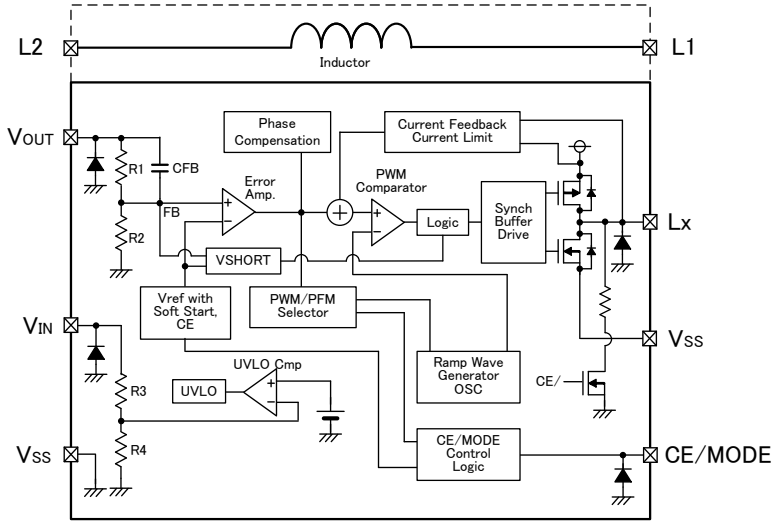

3) F Type

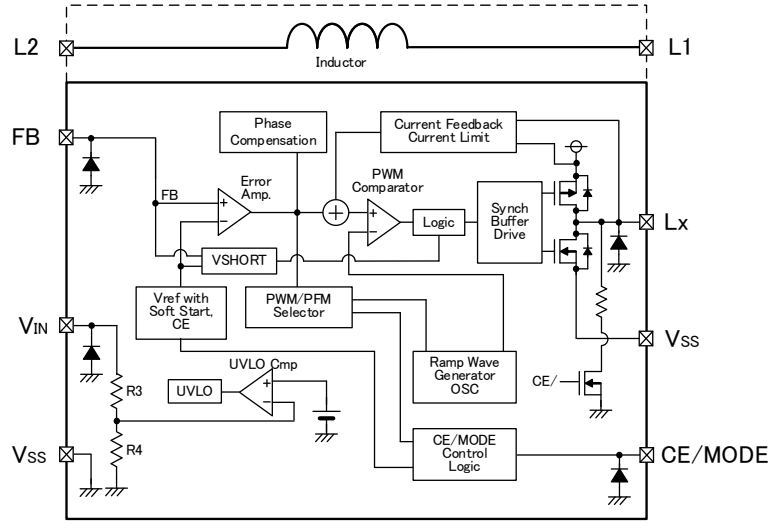

NOTE: The XCL205 offers a fixed PWM control, a signal from CE/MODE Control Logic to PWM/PFM Selector is fixed to "L" level inside. The XCL206 control scheme is PWM/PFM automatic switching, a signal from CE/MODE Control Logic to PWM/PFM Selector is fixed to "H" level inside. The diodes placed inside are ESD protection diodes and parasitic diodes.

Downloaded from Arrow.com.

■PRODUCT CLASSIFICATION

●Ordering Information

(a) Fixed Output Voltage

XCL205①②③④⑤⑥-⑦(*1) Fixed PWM control
XCL206①②③④⑤⑥-⑦(*1) PWM / PFM automatic switching control
XCL207①②③④⑤⑥-⑦(*1) Manual Mode Selection Pin (Semi-custom)

DESIGNATOR	ITEM	SYMBOL	DESCRIPTION
①	Type	A	V_{IN}≧2.0V, No C_L auto discharge, Standard soft-start
		B	V_{IN}≧2.0V, Fixed Output Voltage C_L auto discharge, High speed soft-start
		C	V_{IN}≧2.0V, Fixed Output Voltage C_L auto discharge, Standard soft-start
		G	V_{IN}≧1.8V, Fixed Output Voltage C_L auto discharge, High speed soft-start
②③	Output Voltage	0 ~ 9 A ~ M	Output voltage options e.g. 1.2V → ②=1, ③=2 1.25V → ②=1, ③=C 0.05V increments : 0.05=A,0.15=B, 0.25=C, 0.35=D, 0.45=E, 0.55=F, 0.65=H, 0.75=K, 0.85=L, 0.95=M
④	Oscillation Frequency	3	3.0MHz
⑤⑥-⑦	Packages (Order Unit)	AR-G(*2)	CL-2025 (3,000pcs/Reel)
		CR-G(*3)	CL-2025-02(3,000pcs/Reel)

(*1) The "-G" suffix denotes Halogen and Antimony free as well as being fully EU RoHS compliant.
(*2) AR-G is storage temperature range "-40℃ ~ 105℃".
(*3) CR-G is storage temperature range "-40℃ ~ 125℃".

(b) Output Voltage External Setting

XCL205①②③④⑤⑥-⑦(*1) Fixed PWM control
XCL206①②③④⑤⑥-⑦(*1) PWM / PFM automatic switching control
XCL207①②③④⑤⑥-⑦(*1) Manual Mode Selection Pin (Semi-custom)

DESIGNATOR	ITEM	SYMBOL	DESCRIPTION
①	Type	F	V_{IN}≧1.8V, C_L auto discharge, High speed soft-start
②③	FB Voltage	08	FB Voltage 0.8V
④	Oscillation Frequency	3	3.0MHz
⑤⑥-⑦	Packages (Order Unit)	AR-G(*2)	CL-2025 (3,000pcs/Reel)
		CR-G(*3)	CL-2025-02(3,000pcs/Reel)

(*1) The "-G" suffix denotes Halogen and Antimony free as well as being fully EU RoHS compliant.
(*2) AR-G is storage temperature range "-40℃ ~ 105℃".
(*3) CR-G is storage temperature range "-40℃ ~ 125℃".

Downloaded from Arrow.com.

CL-2025 package : Discontinued.

■PIN CONFIGURATION

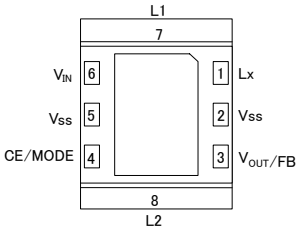

(BOTTOM VIEW)

* It should be connected the Vss pin (No. 2 and 5) to the GND pin.
* If the dissipation pad needs to be connected to other pins, it should be connected to the GND pin.
* Please refer to pattern layout page for the connecting to PCB.

Downloaded from Arrow.com.

■PIN ASSIGNMENT

PIN NUMBER	PIN NAME	FUNCTIONS
1	L_x	Switching Output
2,5	V_{SS}	Ground
3	V_{OUT}	Fixed Output Voltage Pin (A/B/C/G types)
	FB	Output Voltage Sense Pin (F type)
4	CE / MODE	Chip Enable & Mode Switch
6	V_{IN}	Power Input
7	L1	Inductor Electrodes
8	L2	

■FUNCTION

CE/MODE	OPERATIONAL STATES		
	XCL205	XCL206	XCL207
H Level (*1)	Synchronous PWM Fixed Control	Synchronous PWM/PFM Automatic Switching	Synchronous PWM/PFM Automatic Switching
M Leve (*2)	-	–	Synchronous PWM Fixed Control
L Level (*3)	Stand-by	Stand-by	Stand-by

※series CE/MODE pin voltage level range

(*1)H Level :0.65V ≦ H Level ≦ 6V (XCL205,XCL206)

H Level :V_{IN}-0.25V ≦ H Level ≦ V_{IN} (XCL207)

(*2)M Level :0.65V ≦ M Level ≦ V_{IN}-1.0V

(*3)L Level :0V ≦ L Level ≦ 0.25V

(*4)Please do not leave the CE/MODE pin open

■ABSOLUTE MAXIMUM RATINGS

PARAMETER		SYMBOL	RATINGS	UNITS
V_{IN} Pin Voltage		V_{IN}	-0.3 ~ 6.5	V
L_X Pin Voltage		VL_X	-0.3 ~ V_{IN} + 0.3	V
V_{OUT} Pin Voltage(A/B/C/G types)		V_{OUT}	-0.3 ~ 6.5	V
V_{FB} Pin Voltage(F type)		V_{FB}	-0.3 ~ 6.5	V
CE/MODE Pin Voltage		V_{CE}	-0.3 ~ 6.5	V
L_X Pin Current		IL_X	±1500	mA
Power Dissipation (Ta=25℃)	CL2025	Pd	1000 (40mm x 40mm Standard board) (*1)	mW
	CL2025-02			
Operating Ambient Temperature		Topr	-40 ~ 85	℃
Storage Temperature(*2)	CL-2025	Tstg	-40 ~ 105	℃
	CL-2025-02		-40 ~ 125	

(*1) The power dissipation figure shown is PCB mounted and is for reference only.
Please refer to PACKAGING INFORMATION for the mounting condition.

(*2) Storage temperature, are divided by the product specification of the package.

Downloaded from Arrow.com.

CL-2025 package : Discontinued.

■ELECTRICAL CHARACTERISTICS

●XCL205Axx3AR/XCL206Axx3AR/XCL207Axx3AR/XCL205Axx3CR/XCL206Axx3CR/XCL207Axx3CR, Ta=25℃

PARAMETER	SYMBOL	CONDITIONS	MIN.	TYP.	MAX.	UNITS	CIRCUIT
Output Voltage	V_{OUT}	When connected to external components, $V_{IN}=V_{CE}=5.0V$, $I_{OUT}=30mA$	<E-1>	<E-2>	<E-3>	V	①
Operating Voltage Range	V_{IN}		2.0	-	6.0	V	①
Maximum Output Current	I_{OUTMAX}	$V_{IN}=V_{OUT(T)}+2.0V$, $V_{CE}=1.0V$ When connected to external components (*9)	600	-	-	mA	①
UVLO Voltage	V_{UVLO}	$V_{CE}=V_{IN}$, $V_{OUT}=0V$, Voltage which Lx pin holding "L" level (*1, *11)	1.00	1.40	1.78	V	③
Supply Current (XCL205)	I_{DD}	$V_{IN}=V_{CE}=5.0V$, $V_{OUT}=V_{OUT(T)}\times 1.1$	-	46	65	μA	②
Supply Current (XCL206, XCL207)			-	21	35		
Stand-by Current	I_{STB}	$V_{IN}=5.0V$, $V_{CE}=0V$, $V_{OUT}=V_{OUT(T)}\times 1.1$	-	0	1.0	μA	②
Oscillation Frequency	f_{OSC}	When connected to external components, $V_{IN}=V_{OUT(T)}+2.0V$, $V_{CE}=1.0V$, $I_{OUT}=100mA$	2550	3000	3450	kHz	①
PFM Switching Current (*12)	I_{PFM}	When connected to external components, $V_{IN}=V_{OUT(T)}+2.0V$, $V_{CE}=V_{IN}$, $I_{OUT}=1mA$	<E-4>	<E-5>	<E-6>	mA	⑩
PFM Duty Limit (*12)	DTY_{LIMIT_PFM}	$V_{CE}=V_{IN}=V_{OUT(T)}+1.0V$, $I_{OUT}=1mA$	-	200	300	%	①
Maximum Duty Cycle	D_{MAX}	$V_{IN}=V_{CE}=5.0V$, $V_{OUT}=V_{OUT(T)}\times 0.9$	100	-	-	%	③
Minimum Duty Cycle	D_{MIN}	$V_{IN}=V_{CE}=5.0V$, $V_{OUT}=V_{OUT(T)}\times 1.1$	-	-	0	%	③
Efficiency(*2)	EFFI	When connected to external components, $V_{CE}=V_{IN}=V_{OUT(T)}+1.2V$, $I_{OUT}=100mA$	-	<E-7>	-	%	①
Lx SW "H" ON Resistance 1	$R_{Lx H}$	$V_{IN}=V_{CE}=5.0V$, $V_{OUT}=0V$, $ILx=100mA$ (*3)	-	0.35	0.55	Ω	④
Lx SW "H" ON Resistance 2	$R_{Lx H}$	$V_{IN}=V_{CE}=3.6V$, $V_{OUT}=0V$, $ILx=100mA$ (*3)	-	0.42	0.67	Ω	④
Lx SW "L" ON Resistance 1	$R_{Lx L}$	$V_{IN}=V_{CE}=5.0V$ (*4)	-	0.45	0.65	Ω	-
Lx SW "L" ON Resistance 2	$R_{Lx L}$	$V_{IN}=V_{CE}=3.6V$, (*4)	-	0.52	0.77	Ω	-
Lx SW "H" Leakage Current (*5)	I_{LEAKH}	$V_{IN}=V_{OUT}=5.0V$, $V_{CE}=0V$, $Lx=0V$	-	0.01	1.0	μA	⑤
Lx SW "L" Leakage Current (*5)	I_{LEAKL}	$V_{IN}=V_{OUT}=5.0V$, $V_{CE}=0V$, $Lx=5.0V$	-	0.01	1.0	μA	⑤
Current Limit (*10)	I_{LIM}	$V_{IN}=V_{CE}=5.0V$, $V_{OUT}=V_{OUT(T)}\times 0.9$ (*8)	900	1050	1350	mA	⑥
Output Voltage Temperature Characteristics	$\Delta V_{OUT}/(V_{OUT}\cdot\Delta Topr)$	$I_{OUT}=30mA$ -40℃≦Topr≦85℃	-	±100	-	ppm/℃	①
CE "H" Voltage	V_{CEH}	$V_{OUT}=V_{OUT(T)}x0.4$, Applied voltage to V_{CE}, Voltage changes Lx to "H" level (*11)	0.65	-	6.0	V	③
CE "L" Voltage	V_{CEL}	$V_{OUT}=V_{OUT(T)}x0.4$, Applied voltage to V_{CE}, Voltage changes Lx to "L" level (*11)	V_{SS}	-	0.25	V	③
PWM "H" Level Voltage (*13)	V_{PWMH}	When connected to external components, $I_{OUT}=1mA$ (*6), Voltage which oscillation frequency becomes 2550kHz≦f_{OSC}≦3450kHz (*13)	-	-	V_{IN} - 1.0	V	①
PWM "L" Level Voltage (*13)	V_{PWML}	When connected to external components, $I_{OUT}=1mA$ (*6), Voltage which oscillation frequency becomes f_{OSC}<2550kHz (*13)	V_{IN} - 0.25	-	-	V	①
CE "H" Current	I_{CEH}	$V_{IN}=V_{CE}=5.0V$, $V_{OUT}=V_{OUT(T)}x0.9$	-0.1	0.0	0.1	μA	⑤
CE "L" Current	I_{CEL}	$V_{IN}=5.0V$, $V_{CE}=0V$, $V_{OUT}=V_{OUT(T)}x0.9$	-0.1	0.0	0.1	μA	⑤
Soft Start Time	t_{SS}	When connected to external components, $V_{CE}=0V\rightarrow V_{IN}$, $I_{OUT}=1mA$	0.5	0.9	2.5	ms	①
Latch Time	t_{LAT}	$V_{IN}=V_{CE}=5.0V$, $V_{OUT}=0.8\times V_{OUT(T)}$ Short Lx at 1Ω resistance (*7)	1.0	-	20	ms	⑦
Short Protection Threshold Voltage	V_{SHORT}	Sweeping V_{OUT}, $V_{IN}=V_{CE}=5.0V$, Short Lx at 1Ω resistance, V_{OUT} voltage which Lx becomes "L" level within 1ms	<E-8>	<E-9>	<E-10>	V	⑦
Inductance Value	L	Test frequency=1MHz	-	1.5	-	μH	
Allowed Inductor Current	I_{DC}	ΔT=40℃	-	1000	-	mA	

Test conditions: Unless otherwise stated, $V_{IN}=5.0V$, $V_{OUT(T)}$ =Nominal Voltage, applied voltage sequence is $V_{OUT}\rightarrow V_{IN}\rightarrow V_{CE}$

NOTE:

(*1) Including hysteresis operating voltage range.
(*2) EFFI = { (output voltage × output current) / (input voltage × input current) } × 100
(*3) ON resistance (Ω)= (V_{IN} - Lx pin measurement voltage) / 100mA
(*4) Design value
(*5) When temperature is high, a current of approximately 10μA (maximum) may leak.
(*6) The CE/MODE pin of the XCL207 series works also as an external switching pin of PWM control and PWM/PFM control. When the IC is in the operation, control is switched to the automatic PWM/PFM switching mode when the CE/MODE pin voltage is equal to or greater than V_{IN} minus 0.3V, and to the PWM mode when the CE/MODE pin voltage is equal to or lower than V_{IN} minus 1.0V and equal to or greater than V_{CEH}.
(*7) Time until it short-circuits V_{OUT} with GND via 1Ω of resistor from an operational state and is set to Lx=0V from current limit pulse generating.
(*8) When V_{IN} is less than 2.4V, limit current may not be reached because voltage falls caused by ON resistance.
(*9) When the difference between the input and the output is small, some cycles may be skipped completely before current maximizes. If current is further pulled from this state, output voltage will decrease because of P-ch driver ON resistance.
(*10) Current limit denotes the level of detection at peak of coil current.
(*11) "H"=V_{IN}~V_{IN}-1.2V, "L"=+0.1V~-0.1V
(*12) I_{PFM} and DTY_{LIMIT_PFM} are defined only for the XCL206 and XCL207 series which have PFM control function. (Not for the XCL205 series)
(*13) V_{PWMH} and V_{PWML} are defined only for the XCL207 series. (They are not used in the XCL205/and XCL206 series)

Downloaded from Arrow.com.

■ELECTRICAL CHARACTERISTICS (Continued)

●XCL205Bxx3AR/XCL206Bxx3AR/XCL207Bxx3AR/XCL205Bxx3CR/XCL206Bxx3CR/XCL207Bxx3CR,

Ta=25℃

PARAMETER	SYMBOL	CONDITIONS	MIN.	TYP.	MAX.	UNITS	CIRCUIT
Output Voltage	V_{OUT}	When connected to external components, $V_{IN}=V_{CE}=5.0V$, $I_{OUT}=30mA$	<E-1>	<E-2>	<E-3>	V	①
Operating Voltage Range	V_{IN}		2.0	-	6.0	V	①
Maximum Output Current	I_{OUTMAX}	$V_{IN}=V_{OUT(T)}+2.0V$, $V_{CE}=1.0V$ When connected to external components (*9)	600	-	-	mA	①
UVLO Voltage	V_{UVLO}	$V_{CE}=V_{IN}$, $V_{OUT}=0V$, Voltage which Lx pin holding "L" level (*1, *11)	1.00	1.40	1.78	V	③
Supply Current (XCL205)	I_{DD}	$V_{IN}=V_{CE}=5.0V$, $V_{OUT}=V_{OUT(T)}\times1.1$	-	46	65	μA	②
Supply Current (XCL206, XCL207)			-	21	35		
Stand-by Current	I_{STB}	$V_{IN}=5.0V$, $V_{CE}=0V$, $V_{OUT}=V_{OUT(T)}\times1.1$	-	0	1.0	μA	②
Oscillation Frequency	f_{OSC}	When connected to external components, $V_{IN}=V_{OUT(T)}+2.0V$, $V_{CE}=1.0V$, $I_{OUT}=100mA$	2550	3000	3450	kHz	①
PFM Switching Current (*12)	I_{PFM}	When connected to external components, $V_{IN}=V_{OUT(T)}+2.0V$, $V_{CE}=V_{IN}$, $I_{OUT}=1mA$	<E-4>	<E-5>	<E-6>	mA	⑩
PFM Duty Limit (*12)	DTY_{LIMIT_PFM}	$V_{CE}=V_{IN}=V_{OUT(T)}+1.0V$, $I_{OUT}=1mA$	-	200	300	%	①
Maximum Duty Cycle	D_{MAX}	$V_{IN}=V_{CE}=5.0V$, $V_{OUT}=V_{OUT(T)}\times0.9$	100	-	-	%	③
Minimum Duty Cycle	D_{MIN}	$V_{IN}=V_{CE}=5.0V$, $V_{OUT}=V_{OUT(T)}\times1.1$	-	-	0	%	③
Efficiency(*2)	EFFI	When connected to external components, $V_{CE}=V_{IN}=V_{OUT(T)}+1.2V$, $I_{OUT}=100mA$	-	<E-7>	-	%	①
Lx SW "H" ON Resistance 1	R_{LxH}	$V_{IN}=V_{CE}=5.0V$, $V_{OUT}=0V$, $IL_X=100mA$ (*3)	-	0.35	0.55	Ω	④
Lx SW "H" ON Resistance 2	R_{LxH}	$V_{IN}=V_{CE}=3.6V$, $V_{OUT}=0V$, $IL_X=100mA$ (*3)	-	0.42	0.67	Ω	④
Lx SW "L" ON Resistance 1	R_{LxL}	$V_{IN}=V_{CE}=5.0V$ (*4)	-	0.45	0.65	Ω	-
Lx SW "L" ON Resistance 2	R_{LxL}	$V_{IN}=V_{CE}=3.6V$ (*4)	-	0.52	0.77	Ω	-
Lx SW "H" Leakage Current (*5)	I_{LEAKH}	$V_{IN}=V_{OUT}=5.0V$, $V_{CE}=0V$, $L_X=0V$	-	0.01	1.0	μA	⑨
Current Limit (*10)	I_{LIM}	$V_{IN}=V_{CE}=5.0V$, $V_{OUT}=V_{OUT(T)}\times0.9$ (*8)	900	1050	1350	mA	⑥
Output Voltage Temperature Characteristics	$\Delta V_{OUT}/(V_{OUT}\cdot\Delta Topr)$	$I_{OUT}=30mA$ -40℃≦Topr≦85℃	-	±100	-	ppm/℃	①
CE "H" Voltage	V_{CEH}	$V_{OUT}=V_{OUT(T)}$x0.4, Applied voltage to V_{CE}, Voltage changes Lx to "H" level (*11)	0.65	-	6.0	V	③
CE "L" Voltage	V_{CEL}	$V_{OUT}=V_{OUT(T)}$x0.4, Applied voltage to V_{CE}, Voltage changes Lx to "L" level (*11)	V_{SS}	-	0.25	V	③
PWM "H" Level Voltage (*13)	V_{PWMH}	When connected to external components, $I_{OUT}=1mA$ (*6), Voltage which oscillation frequency becomes 2550kHz≦f_{OSC}≦3450kHz (*13)	-	-	V_{IN} - 1.0	V	①
PWM "L" Level Voltage (*13)	V_{PWML}	When connected to external components, $I_{OUT}=1mA$ (*6), Voltage which oscillation frequency becomes f_{OSC}<2550kHz (*13)	V_{IN} - 0.25	-	-	V	①
CE "H" Current	I_{CEH}	$V_{IN}=V_{CE}=5.0V$, $V_{OUT}=V_{OUT(T)}$x0.9	-0.1	0.0	0.1	μA	⑤
CE "L" Current	I_{CEL}	$V_{IN}=5.0V$, $V_{CE}=0V$, $V_{OUT}=V_{OUT(T)}$x0.9	-0.1	0.0	0.1	μA	⑤
Soft Start Time	t_{SS}	When connected to external components, $V_{CE}=0V\rightarrow V_{IN}$, $I_{OUT}=1mA$	-	<E-11>	<E-12>	ms	①
Latch Time	t_{LAT}	$V_{IN}=V_{CE}=5.0V$, $V_{OUT}=0.8\times V_{OUT(T)}$ Short Lx at 1Ω resistance (*7)	1.0	-	20	ms	⑦
Short Protection Threshold Voltage	V_{SHORT}	Sweeping V_{OUT}, $V_{IN}=V_{CE}=5.0V$, Short Lx at 1Ω resistance, V_{OUT} voltage which Lx becomes "L" level within 1ms	<E-8>	<E-9>	<E-10>	V	⑦
C_L Discharge	R_{DCHG}	$V_{IN}=5.0V$, $L_X=5.0V$, $V_{CE}=0V$, V_{OUT}=Open	200	300	450	Ω	⑧
Inductance Value	L	Test frequency =1MHz	-	1.5	-	μH	
Allowed Inductor Current	I_{DC}	ΔT=40℃	-	1000	-	mA	

Test conditions: Unless otherwise stated, $V_{IN}=5.0V$, $V_{OUT(T)}$ =Nominal Voltage, applied voltage sequence is $V_{OUT}\rightarrow V_{IN}\rightarrow V_{CE}$

NOTE:

(*1) Including hysteresis operating voltage range.
(*2) EFFI = { (output voltage × output current) / (input voltage × input current) } × 100
(*3) ON resistance (Ω)= (V_{IN} - Lx pin measurement voltage) / 100mA
(*4) Design value
(*5) When temperature is high, a current of approximately 10μA (maximum) may leak.
(*6) The CE/MODE pin of the XCL207 series works also as an external switching pin of PWM control and PWM/PFM control. When the IC is in the operation, control is switched to the automatic PWM/PFM switching mode when the CE/MODE pin voltage is equal to or greater than V_{IN} minus 0.3V, and to the PWM mode when the CE/MODE pin voltage is equal to or lower than V_{IN} minus 1.0V and equal to or greater than V_{CEH}.
(*7) Time until it short-circuits V_{OUT} with GND via 1Ω of resistor from an operational state and is set to Lx=0V from current limit pulse generating.
(*8) When V_{IN} is less than 2.4V, limit current may not be reached because voltage falls caused by ON resistance.
(*9) When the difference between the input and the output is small, some cycles may be skipped completely before current maximizes. If current is further pulled from this state, output voltage will decrease because of P-ch driver ON resistance.
(*10) Current limit denotes the level of detection at peak of coil current.
(*11) "H"=V_{IN}~V_{IN}-1.2V, "L"=+0.1V~-0.1V
(*12) I_{PFM} and DTY_{LIMIT_PFM} are defined only for the XCL206 and XCL207 series which have PFM control function. (Not for the XCL205 series)
(*13) V_{PWMH} and V_{PWML} are defined only for the XCL207 series. (They are not used in the XCL205/and XCL206 series)

Downloaded from Arrow.com.

CL-2025 package : Discontinued.

■ELECTRICAL CHARACTERISTICS (Continued)

●XCL205Cxx3AR/XCL206Cxx3AR/XCL207Cxx3AR/XCL205Cxx3CR/XCL206Cxx3CR/XCL207Cxx3CR,

Ta=25℃

PARAMETER	SYMBOL	CONDITIONS	MIN.	TYP.	MAX.	UNITS	CIRCUIT
Output Voltage	V_{OUT}	When connected to external components, V_{IN} = V_{CE} =5.0V, I_{OUT} =30mA	<E-1>	<E-2>	<E-3>	V	①
Operating Voltage Range	V_{IN}		2.0	-	6.0	V	①
Maximum Output Current	I_{OUTMAX}	V_{IN}=$V_{OUT(T)}$+2.0V, V_{CE}=1.0V When connected to external components (*9)	600	-	-	mA	①
UVLO Voltage	V_{UVLO}	V_{CE}=V_{IN},V_{OUT}=0V, Voltage which Lx pin holding "L" level (*1, *11)	1.00	1.40	1.78	V	③
Supply Current (XCL205)	I_{DD}	V_{IN} =V_{CE}=5.0V, V_{OUT}= $V_{OUT(T)}$ × 1.1	-	46	65	μA	②
Supply Current (XCL206, XCL207)				21	35		
Stand-by Current	I_{STB}	V_{IN} =5.0V, V_{CE}=0V, V_{OUT}= $V_{OUT(T)}$ × 1.1	-	0	1.0	μA	②
Oscillation Frequency	f_{OSC}	When connected to external components, V_{IN} =$V_{OUT(T)}$+2.0V,V_{CE}=1.0V, I_{OUT}=100mA	2550	3000	3450	kHz	①
PFM Switching Current (*12)	I_{PFM}	When connected to external components, V_{IN} =$V_{OUT(T)}$+2.0V, V_{CE} = V_{IN} , I_{OUT}=1mA	<E-4>	<E-5>	<E-6>	mA	⑩
PFM Duty Limit (*12)	DTY_{LIMIT_PFM}	V_{CE}= V_{IN} = $V_{OUT(T)}$ +1.0V, I_{OUT}=1mA	-	200	300	%	①
Maximum Duty Cycle	MAXDTY	V_{IN} = V_{CE} =5.0V, V_{OUT} = $V_{OUT(T)}$ × 0.9	100	-	-	%	③
Minimum Duty Cycle	MINDTY	V_{IN} = V_{CE} =5.0V, V_{OUT} = $V_{OUT(T)}$ × 1.1	-	-	0	%	③
Efficiency(*2)	EFFI	When connected to external components, V_{CE} = V_{IN} ＝ $V_{OUT(T)}$+1.2V, I_{OUT} = 100mA	-	<E-7>	-	%	①
Lx SW "H" ON Resistance 1	R_{LxH}	V_{IN} = V_{CE} = 5.0V, V_{OUT} = 0V,IL_X = 100mA (*3)	-	0.35	0.55	Ω	④
Lx SW "H" ON Resistance 2	R_{LxH}	V_{IN} = V_{CE} = 3.6V, V_{OUT} = 0V,IL_X = 100mA (*3)	-	0.42	0.67	Ω	④
Lx SW "L" ON Resistance 1	R_{LxL}	V_{IN} = V_{CE} = 5.0V (*4)	-	0.45	0.65	Ω	-
Lx SW "L" ON Resistance 2	R_{LxL}	V_{IN} = V_{CE} = 3.6V (*4)	-	0.52	0.77	Ω	-
Lx SW "H" Leakage Current (*5)	I_{LEAKH}	V_{IN}= V_{OUT} =5.0V, V_{CE} =0V, L_X=0V	-	0.01	1.0	μA	⑨
Current Limit (*10)	I_{LIM}	V_{IN} = V_{CE}= 5.0V, V_{OUT} = $V_{OUT(T)}$ × 0.9 (*8)	900	1050	1350	mA	⑥
Output Voltage Temperature Characteristics	ΔVout/ (V_{OUT}・ΔTopr)	I_{OUT} =30mA -40℃≦Topr≦85℃	-	±100	-	ppm/ ℃	①
CE "H" Voltage	V_{CEH}	V_{OUT} = $V_{OUT(T)}$x0.4, Applied voltage to V_{CE}, Voltage changes Lx to "H" level (*11)	0.65	-	6.0	V	③
CE "L" Voltage	V_{CEL}	V_{OUT} = $V_{OUT(T)}$x0.4, Applied voltage to V_{CE}, Voltage changes Lx to "L" level (*11)	V_{SS}	-	0.25	V	③
PWM "H" Level Voltage (*13)	V_{PWMH}	When connected to external components, I_{OUT}=1mA (*6), Voltage which oscillation frequency becomes 2550kHz≦f_{OSC}≦3450kHz (*13)	-	-	V_{IN} - 1.0	V	①
PWM "H" Level Voltage (*13)	V_{PWML}	When connected to external components, I_{OUT}=1mA (*6), Voltage which oscillation frequency becomes f_{OSC}＜2550kHz (*13)	V_{IN} - 0.25	-	-	V	①
CE "H" Current	I_{CEH}	V_{IN} =V_{CE} =5.0V, V_{OUT} = $V_{OUT(T)}$x0.9	-0.1	0.0	0.1	μA	⑤
CE "L" Current	I_{CEL}	V_{IN} =5.0V, V_{CE} =0V, V_{OUT} = $V_{OUT(T)}$x0.9	-0.1	0.0	0.1	μA	⑤
Soft Start Time	t_{SS}	When connected to external components, V_{CE}=0V→V_{IN} , I_{OUT}=1mA	0.5	0.9	2.5	ms	①
Latch Time	t_{LAT}	V_{IN}=V_{CE}=5.0V, V_{OUT}=0.8 × $V_{OUT(T)}$ Short Lx at 1Ω resistance (*7)	1.0	-	20	ms	⑦
Short Protection Threshold Voltage	V_{SHORT}	Sweeping V_{OUT}, V_{IN}=V_{CE}=5.0V, Short Lx at 1Ω resistance, V_{OUT} voltage which Lx becomes "L" level within 1ms	<E-8>	<E-9>	<E-10>	V	⑦
C_L Discharge	R_{DCHG}	V_{IN} = 5.0V, L_X = 5.0V V_{CE} = 0V V_{OUT} = open	200	300	450	Ω	⑧
Inductance Value	L	Test frequency=1MHz	-	1.5	-	μH	-
Allowed Inductor Current	I_{DC}	ΔT=40℃	-	1000	-	mA	-

Test conditions: Unless otherwise stated, V_{IN}=5.0V, $V_{OUT(T)}$ = Nominal Voltage, applied voltage sequence is V_{OUT}→V_{IN}→V_{CE}

NOTE:

(*1) Including hysteresis operating voltage range.
(*2) EFFI = { (output voltage × output current) ／ (input voltage × input current) } × 100
(*3) ON resistance (Ω)= (V_{IN} - Lx pin measurement voltage) ／ 100mA
(*4) Design value
(*5) When temperature is high, a current of approximately 10μA (maximum) may leak.
(*6) The CE/MODE pin of the XCL207 series works also as an external switching pin of PWM control and PWM/PFM control. When the IC is in the operation, control is switched to the automatic PWM/PFM switching mode when the CE/MODE pin voltage is equal to or greater than V_{IN} minus 0.3V, and to the PWM mode when the CE/MODE pin voltage is equal to or lower than V_{IN} minus 1.0V and equal to or greater than V_{CEH}.
(*7) Time until it short-circuits V_{OUT} with GND via 1Ω of resistor from an operational state and is set to Lx=0V from current limit pulse generating.
(*8) When V_{IN} is less than 2.4V, limit current may not be reached because voltage falls caused by ON resistance.
(*9) When the difference between the input and the output is small, some cycles may be skipped completely before current maximizes. If current is further pulled from this state, output voltage will decrease because of P-ch driver ON resistance.
(*10) Current limit denotes the level of detection at peak of coil current.
(*11) "H"=V_{IN}~V_{IN}-1.2V, "L"=+0.1V~-0.1V
(*12) I_{PFM} and DTY_{LIMIT_PFM} are defined only for the XCL206 and XCL207 series which have PFM control function. (Not for the XCL205 series)
(*13) V_{PWMH} and V_{PWML} are defined only for the XCL207 series. (They are not used in the XCL205/and XCL206 series)

Downloaded from Arrow.com.

■ELECTRICAL CHARACTERISTICS (Continued)

●XCL205Gxx3AR/XCL206Gxx3AR/XCL207Gxx3AR/XCL205Gxx3CR/XCL206Gxx3CR/XCL207Gxx3CR,

Ta=25℃

PARAMETER	SYMBOL	CONDITIONS	MIN.	TYP.	MAX.	UNITS	CIRCUIT
Output Voltage	V_{OUT}	When connected to external components, V_{IN} = V_{CE} =5.0V, I_{OUT} =30mA	<E-1>	<E-2>	<E-3>	V	①
Operating Voltage Range	V_{IN}		1.8	-	6.0	V	①
Maximum Output Current	I_{OUTMAX}	V_{IN}=$V_{OUT(T)}$+2.0V, V_{CE}=1.0V When connected to external components (*9)	600	-	-	mA	①
UVLO Voltage	V_{UVLO}	V_{CE}=V_{IN},$V_{OUT(T)}$×0.5(*14), Voltage which Lx pin holding "L" level (*1, *11)	1.00	1.40	1.78	V	③
Supply Current (XCL205)	I_{DD}	V_{IN} =V_{CE}=5.0V, V_{OUT}= $V_{OUT(T)}$×1.1	-	46	65	μA	②
Supply Current (XCL206, XCL207)			-	21	35		
Stand-by Current	I_{STB}	V_{IN} =5.0V, V_{CE}=0V, V_{OUT}= $V_{OUT(T)}$×1.1	-	0	1.0	μA	②
Oscillation Frequency	f_{OSC}	When connected to external components, V_{IN} =$V_{OUT(T)}$+2.0V,V_{CE}=1.0V, I_{OUT}=100mA	2550	3000	3450	kHz	①
PFM Switching Current (*12)	I_{PFM}	When connected to external components, V_{IN} =$V_{OUT(T)}$+2.0V, V_{CE} = V_{IN} , I_{OUT}=1mA	<E-4>	<E-5>	<E-6>	mA	⑩
PFM Duty Limit (*12)	DTY_{LIMIT_PFM}	V_{CE}= V_{IN} = $V_{OUT(T)}$+1.0V, I_{OUT}=1mA	-	200	300	%	①
Maximum Duty Cycle	MAXDTY	V_{IN} = V_{CE} =5.0V, V_{OUT} = $V_{OUT(T)}$×0.9	100	-	-	%	③
Minimum Duty Cycle	MINDTY	V_{IN} = V_{CE} =5.0V, V_{OUT} = $V_{OUT(T)}$×1.1	-	-	0	%	③
Efficiency(*2)	EFFI	When connected to external components, V_{CE} = V_{IN} = $V_{OUT(T)}$+1.2V, I_{OUT} = 100mA	-	<E-7>	-	%	①
Lx SW "H" ON Resistance 1	R_{LxH}	V_{IN} = V_{CE} = 5.0V, V_{OUT} = 0V,IL_X= 100mA (*3)	-	0.35	0.55	Ω	④
Lx SW "H" ON Resistance 2	R_{LxH}	V_{IN} = V_{CE} = 3.6V, V_{OUT} = 0V,IL_X= 100mA (*3)	-	0.42	0.67	Ω	④
Lx SW "L" ON Resistance 1	R_{LxL}	V_{IN} = V_{CE} = 5.0V (*4)	-	0.45	0.65	Ω	-
Lx SW "L" ON Resistance 2	R_{LxL}	V_{IN} = V_{CE} = 3.6V (*4)	-	0.52	0.77	Ω	-
Lx SW "H" Leakage Current (*5)	I_{LEAKH}	V_{IN}= V_{OUT} =5.0V, V_{CE} =0V, L_X=0V	-	0.01	1.0	μA	⑨
Current Limit (*10)	I_{LIM}	V_{IN} = V_{CE}= 5.0V, V_{OUT} = $V_{OUT(T)}$×0.9 (*8)	900	1050	1350	mA	⑥
Output Voltage Temperature Characteristics	ΔV_{OUT}/ (V_{OUT}・ΔTopr)	I_{OUT} =30mA -40℃≦Topr≦85℃	-	±100	-	ppm/ ℃	①
CE "H" Voltage	V_{CEH}	V_{OUT} = $V_{OUT(T)}$x0.4, Applied voltage to V_{CE}, Voltage changes Lx to "H" level (*11)	0.65	-	6.0	V	③
CE "L" Voltage	V_{CEL}	V_{OUT} = $V_{OUT(T)}$x0.4, Applied voltage to V_{CE}, Voltage changes Lx to "L" level (*11)	V_{SS}	-	0.25	V	③
PWM "H" Level Voltage (*13)	V_{PWMH}	When connected to external components, I_{OUT}=1mA (*6), Voltage which oscillation frequency becomes 2550kHz≦f_{OSC}≦3450kHz (*13)	-	-	V_{IN} - 1.0	V	①
PWM "H" Level Voltage (*13)	V_{PWML}	When connected to external components, I_{OUT}=1mA (*6), Voltage which oscillation frequency becomes f_{OSC}<2550kHz (*13)	V_{IN} - 0.25	-	-	V	①
CE "H" Current	I_{CEH}	V_{IN} =V_{CE} =5.0V, V_{OUT} = $V_{OUT(T)}$x0.9	-0.1	0.0	0.1	μA	⑤
CE "L" Current	I_{CEL}	V_{IN} =5.0V, V_{CE} =0V, V_{OUT} = $V_{OUT(T)}$x0.9	-0.1	0.0	0.1	μA	⑤
Soft Start Time	t_{SS}	When connected to external components, V_{CE}=0V→V_{IN} , I_{OUT}=1mA	-	<E-11>	<E-12>	ms	①
Latch Time	t_{LAT}	V_{IN}=V_{CE}=5.0V, V_{OUT}=0.8×$V_{OUT(T)}$ Short Lx at 1Ω resistance (*7)	1.0	-	20	ms	⑦
Short Protection Threshold Voltage	V_{SHORT}	Sweeping V_{OUT}, V_{IN}=V_{CE}=5.0V, Short Lx at 1Ω resistance, V_{OUT} voltage which Lx becomes "L" level within 1ms	<E-8>	<E-9>	<E-10>	V	⑦
C_L Discharge	R_{DCHG}	V_{IN} = 5.0V, L_X = 5.0V V_{CE} = 0V V_{OUT} = open	200	300	450	Ω	⑧
Inductance Value	L	Test frequency=1MHz	-	1.5	-	μH	-
Allowed Inductor Current	I_{DC}	ΔT=40℃	-	1000	-	mA	-

Test conditions: Unless otherwise stated, V_{IN}=5.0V, $V_{OUT(T)}$ = Nominal Voltage, applied voltage sequence is V_{OUT}→V_{IN}→V_{CE}

NOTE:

(*1) Including hysteresis operating voltage range.
(*2) EFFI = { (output voltage × output current) / (input voltage × input current) } × 100
(*3.) ON resistance (Ω)= (V_{IN} - Lx pin measurement voltage) / 100mA
(*4.) Design value
(*5) When temperature is high, a current of approximately 10μA (maximum) may leak.
(*6) The CE/MODE pin of the XCL207 series works also as an external switching pin of PWM control and PWM/PFM control. When the IC is in the operation, control is switched to the automatic PWM/PFM switching mode when the CE/MODE pin voltage is equal to or greater than V_{IN} minus 0.3V, and to the PWM mode when the CE/MODE pin voltage is equal to or lower than V_{IN} minus 1.0V and equal to or greater than V_{CEH}.
(*7) Time until it short-circuits V_{OUT} with GND via 1Ω of resistor from an operational state and is set to Lx=0V from current limit pulse generating.
(*8) When V_{IN} is less than 2.4V, limit current may not be reached because voltage falls caused by ON resistance.
(*9) When the difference between the input and the output is small, some cycles may be skipped completely before current maximizes. If current is further pulled from this state, output voltage will decrease because of P-ch driver ON resistance.
(*10) Current limit denotes the level of detection at peak of coil current.
(*11) "H"=V_{IN}~V_{IN}-1.2V, "L"=+0.1V~-0.1V
(*12) I_{PFM} and DTY_{LIMIT_PFM} are defined only for the XCL206 and XCL207 series which have PFM control function. (Not for the XCL 205 series)
(*13) V_{PWMH} and V_{PWML} are defined only for the XCL207 series. (They are not used in the XCL205/and XCL206 series)
(*14) V_{IN} is applied when $V_{OUT(T)}$ x 0.5V becomes more than V_{IN}.

Downloaded from Arrow.com.

CL-2025 package : Discontinued.

■ELECTRICAL CHARACTERISTICS (Continued)

●XCL205F083AR/XCL206F083AR/XCL207F083AR/XCL205F083CR/XCL206F083CR/XCL207F083CR,

Ta=25℃

PARAMETER	SYMBOL	CONDITIONS	MIN.	TYP.	MAX.	UNITS	CIRCUIT
FB Voltage	V_{FB}	V_{IN}=V_{CE}=5.0V, V_{FB} voltage which Decrease V_{FB} from 0.9V, Lx becomes "H" (*11) level	0.784	0.800	0.816	V	③
Operating Voltage Range	V_{IN}		1.8	-	6.0	V	⑪
Maximum Output Current	I_{OUTMAX}	V_{IN}=$V_{OUT(T)}$+2.0V, V_{CE}=1.0V When connected to external components (*9)	600	-	-	mA	⑪
UVLO Voltage	V_{UVLO}	V_{CE}=V_{IN},V_{FB}= 0.4V, Voltage which Lx pin holding "L" level (*1, *11)	1.00	1.40	1.78	V	③
Supply Current (XCL205)	I_{DD}	V_{IN} =V_{CE}=5.0V, V_{FB}= 0.88V	-	46	65	μA	②
Supply Current (XCL206, XCL207)			-	21	35		
Stand-by Current	I_{STB}	V_{IN} =5.0V, V_{CE}=0V, V_{FB}= 0.88V	-	0	1.0	μA	②
Oscillation Frequency	f_{OSC}	When connected to external components, V_{IN} =3.2V, V_{CE}=1.0V, I_{OUT}=100mA	2550	3000	3450	kHz	⑪
PFM Switching Current (*12)	I_{PFM}	When connected to external components, V_{IN} =3.2V, V_{CE} = V_{IN} , I_{OUT}=1mA	170	220	270	mA	⑫
PFM Duty Limit (*12)	DTY_{LIMIT_PFM}	V_{CE}= V_{IN} = 2.2V, I_{OUT}=1mA	-	200	300	%	⑪
Maximum Duty Cycle	MAXDTY	V_{IN} = V_{CE} =5.0V, V_{FB} = 0.72V	100	-	-	%	③
Minimum Duty Cycle	MINDTY	V_{IN} = V_{CE} =5.0V, V_{FB} = 0.88V	-	-	0	%	③
Efficiency(*2)	EFFI	When connected to external components, V_{CE} = V_{IN} = 2.4V, I_{OUT} = 100mA	-	86	-	%	⑪
Lx SW "H" ON Resistance 1	$R_{Lx H}$	V_{IN} = V_{CE} = 5.0V, V_{FB} = 0.72V,IL_X = 100mA (*3)	-	0.35	0.55	Ω	④
Lx SW "H" ON Resistance 2	$R_{Lx H}$	V_{IN} = V_{CE} = 3.6V, V_{FB} = 0.72V,IL_X = 100mA (*3)	-	0.42	0.67	Ω	④
Lx SW "L" ON Resistance 1	$R_{Lx L}$	V_{IN} = V_{CE} = 5.0V (*4)	-	0.45	0.65	Ω	-
Lx SW "L" ON Resistance 2	$R_{Lx L}$	V_{IN} = V_{CE} = 3.6V (*4)	-	0.52	0.77	Ω	-
Lx SW "H" Leakage Current (*5)	I_{LEAKH}	V_{IN}= V_{FB} =5.0V, V_{CE} =0V, L_X=0V	-	0.01	1.0	μA	⑨
Current Limit (*10)	I_{LIM}	V_{IN} = V_{CE}= 5.0V, V_{FB} = 0.72V (*8)	900	1050	1350	mA	⑥
Output Voltage Temperature Characteristics	ΔV_{OUT}/ (V_{OUT}・ΔTopr)	I_{OUT} =30mA -40℃≦Topr≦85℃	-	±100	-	ppm/ ℃	⑪
CE "H" Voltage	V_{CEH}	V_{FB}=0.72V, Applied voltage to V_{CE}, Voltage changes Lx to "H" level (*11)	0.65	-	6.0	V	③
CE "L" Voltage	V_{CEL}	V_{FB}=0.72V, Applied voltage to V_{CE}, Voltage changes Lx to "L" level (*11)	V_{SS}	-	0.25	V	③
PWM "H" Level Voltage (*13)	V_{PWMH}	When connected to external components, I_{OUT}=1mA (*6), Voltage which oscillation frequency becomes 2550kHz≦f_{OSC}≦3450kHz (*13)	-	-	V_{IN} - 1.0	V	⑪
PWM "H" Level Voltage (*13)	V_{PWML}	When connected to external components, I_{OUT}=1mA (*6), Voltage which oscillation frequency becomes f_{OSC}<2550kHz (*13)	V_{IN} - 0.25	-	-	V	⑪
CE "H" Current	I_{CEH}	V_{IN} = V_{CE} =5.0V, V_{FB} = 0.72V	-0.1	0.0	0.1	μA	⑤
CE "L" Current	I_{CEL}	V_{IN} =5.0V, V_{CE} = 0V, V_{FB} = 0.72V	-0.1	0.0	0.1	μA	⑤
Soft Start Time	t_{SS}	When connected to external components, V_{CE}=0V→V_{IN} , I_{OUT}=1mA	-	0.25	0.40	ms	⑪
Latch Time	t_{LAT}	V_{IN}=V_{CE}=5.0V, V_{FB}=0.64 Short Lx at 1Ω resistance (*7)	1.0	-	20	ms	⑦
Short Protection Threshold Voltage	V_{SHORT}	V_{IN}=V_{CE}=5.0V, V_{FB} voltage which Decrease V_{FB} from 0.4V, Lx becomes "L" (*11)level within 1ms	0.15	0.20	0.25	V	⑦
C_L Discharge	R_{DCHG}	V_{IN} = 5.0V L_X = 5.0V V_{CE} = 0V, V_{FB} = open	200	300	450	Ω	⑧
Inductance Value	L	Test frequency=1MHz	-	1.5	-	μH	-
Allowed Inductor Current	I_{DC}	ΔT=40℃	-	1000	-	mA	-

Test conditions: V_{OUT}=1.2V when the external components are connected. Unless otherwise stated, V_{IN}=5.0V, applied voltage sequence is V_{FB}→V_{IN}→V_{CE}

NOTE:

(*1) Including hysteresis operating voltage range.

(*2) EFFI = { (output voltage × output current) ／ (input voltage × input current) } × 100

(*3) ON resistance (Ω)= (V_{IN} - Lx pin measurement voltage) ／ 100mA

(*4) Design value

(*5) When temperature is high, a current of approximately 10μA (maximum) may leak.

(*6) The CE/MODE pin of the XCL207 series works also as an external switching pin of PWM control and PWM/PFM control. When the IC is in the operation, control is switched to the automatic PWM/PFM switching mode when the CE/MODE pin voltage is equal to or greater than V_{IN} minus 0.3V, and to the PWM mode when the CE/MODE pin voltage is equal to or lower than V_{IN} minus 1.0V and equal to or greater than V_{CEH}.

(*7) Time until it short-circuits V_{FB} with GND via 1Ωof resistor from an operational state and is set to Lx=0V from current limit pulse generating.

(*8) When V_{IN} is less than 2.4V, limit current may not be reached because voltage falls caused by ON resistance.

(*9) When the difference between the input and the output is small, some cycles may be skipped completely before current maximizes. If current is further pulled from this state, output voltage will decrease because of P-ch driver ON resistance.

(*10) Current limit denotes the level of detection at peak of coil current.

(*11) "H"=V_{IN}~V_{IN}-1.2V, "L"=+0.1V~-0.1V

(*12) I_{PFM} and DTY_{LIMIT_PFM} are defined only for the XCL206 and XCL207 series which have PFM control function. (Not for the XCL205 series)

(*13) V_{PWMH} and V_{PWML} are defined only for the XCL207 series. (They are not used in the XCL205/and XCL206 series)

Downloaded from Arrow.com.

■ELECTRICAL CHARACTERISTICS (Continued)

●Output Voltage

NOMINAL OUTPUT VOLTAGE	V_{OUT}(V)		
	<E-1>	<E-2>	<E-3>
$V_{OUT(T)}$	MIN	TYP	MAX
1.00	0.980	1.000	1.020
1.20	1.176	1.200	1.224
1.40	1.372	1.400	1.428
1.50	1.470	1.500	1.530
1.75	1.715	1.750	1.785
1.80	1.764	1.800	1.836
1.90	1.862	1.900	1.938
2.50	2.450	2.500	2.550
2.80	2.744	2.800	2.856
2.85	2.793	2.850	2.907
3.00	2.940	3.000	3.060
3.30	3.234	3.300	3.366

●PFM Switching Current

NOMINAL OUTPUT VOLTAGE	I_{PFM}(mA)		
	<E-4>	<E-5>	<E-6>
	MIN	TYP	MAX
$V_{OUT(T)} \leqq 1.2V$	190	260	350
$1.2V < V_{OUT(T)} \leqq 1.75V$	180	240	300
$1.8V \leqq V_{OUT(T)}$	170	220	270

●Efficiency

NOMINAL OUTPUT VOLTAGE	Efficiency (%)
	XCL205/206/207
	<E-7>
$V_{OUT(T)}$	3.0MHz
1.00	79
1.20	82
1.40	83
1.50	84
1.75	85
1.80	
1.90	
2.50	86
2.80	
2.85	
3.00	
3.30	

●Short Protection Threshold Voltage

NOMINAL OUTPUT VOLTAGE	V_{SHORT}(V)					
	XCL205/206/207A,B,C			XCL205/206/207G		
	<E-8>	<E-9>	<E-10>	<E-8>	<E-9>	<E-10>
$V_{OUT(T)}$	MIN	TYP	MAX	MIN	TYP	MAX
1.00	0.375	0.500	0.625	0.188	0.250	0.313
1.20	0.450	0.600	0.750	0.225	0.300	0.375
1.40	0.525	0.700	0.875	0.263	0.350	0.438
1.50	0.563	0.750	0.938	0.282	0.375	0.469
1.75	0.656	0.875	1.094	0.328	0.438	0.547
1.80	0.675	0.900	1.125	0.338	0.450	0.563
1.90	0.713	0.950	1.188	0.357	0.475	0.594
2.50	0.938	1.250	1.563	0.469	0.625	0.782
2.80	1.050	1.400	1.750	0.525	0.700	0.875
2.85	1.069	1.425	1.781	0.535	0.713	0.891
3.00	1.125	1.500	1.875	0.563	0.750	0.938
3.30	1.238	1.650	2.063	0.619	0.825	1.032

●Soft Start Time (XCL20xB, XCL20xG)

NOMINAL OUTPUT VOLTAGE	t_{SS}(ms)	
	<E-11>	<E-12>
	TYP	MAX
$0.8V \leqq V_{OUT(T)} \leqq 1.75V$	0.25	0.4
$1.8V \leqq V_{OUT(T)} \leqq 4.0V$	0.32	0.5

Downloaded from Arrow.com.

CL-2025 package : Discontinued.

■TEST CIRCUITS

< Circuit No.1 >

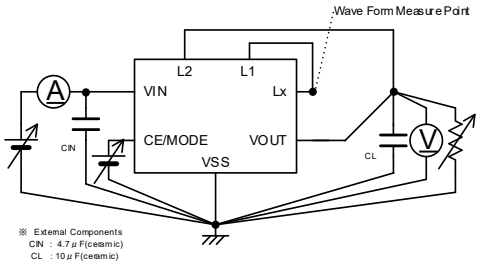

< Circuit No.2 >

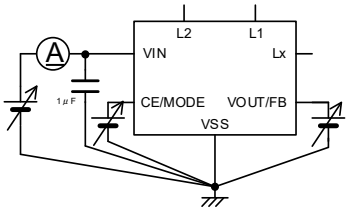

< Circuit No.3 >

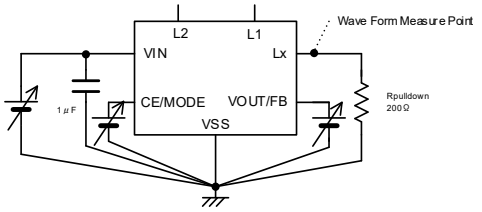

< Circuit No.4 >

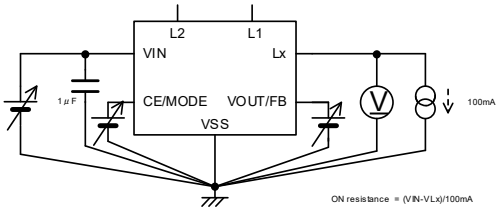

< Circuit No.5 >

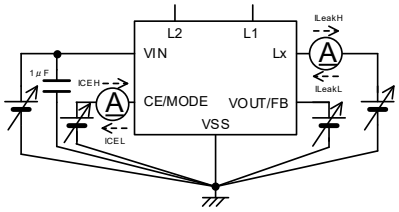

< Circuit No.6 >

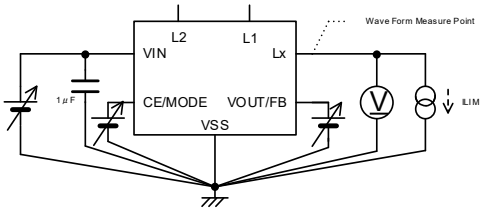

< Circuit No.7 >

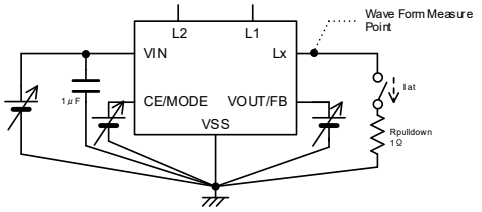

< Circuit No.8 >

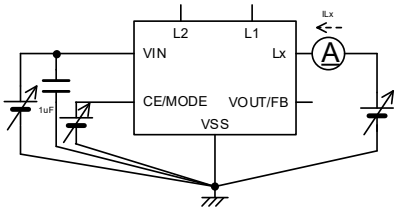

< Circuit No.9 >

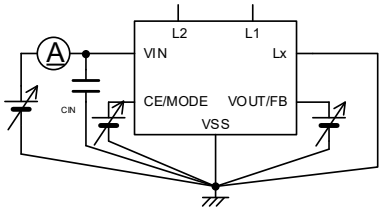

< Circuit No.10 >

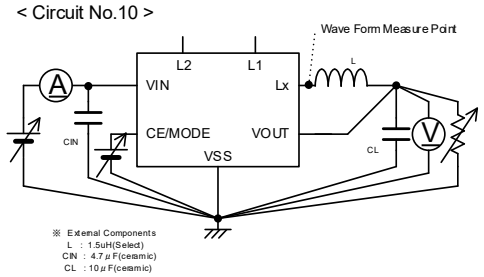

< Circuit No.11 >

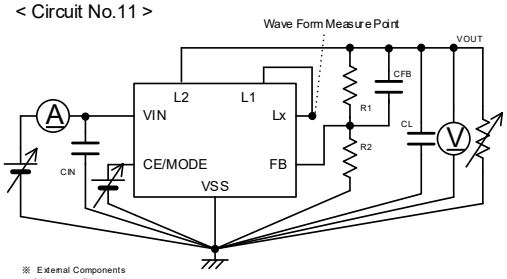

※ External Components
CIN : 4.7μF(ceramic)
CL : 10μF(ceramic)
R1 : 150kΩ
R2 : 300kΩ
CFB : 100pF(ceramic)
※VOUT(T)=1.2V

< Circuit No.12 >

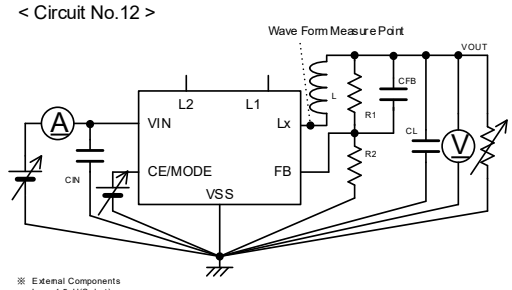

※ External Components
L : 1.5uH(Select)
CIN : 4.7μF(ceramic)
CL : 10μF(ceramic)
R1 : 150kΩ
R2 : 300kΩ
CFB : 100pF(ceramic)
※VOUT(T)=1.2V

Downloaded from Arrow.com.

■TYPICAL APPLICATION CIRCUIT

●XCL205/XCL206/XCL207 Series A/B/C/G Types

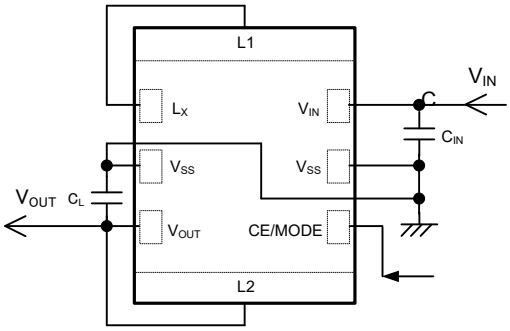

●External Components

CIN : 10V/4.7μF (Ceramic)

CL : 6.3V/10μF (Ceramic)

NOTE

The Inductor can be used only for this DC/DC converter.

Please do not use this inductor for the other reasons.

Please use B, X5R, and X7R grades in temperature characteristics for CIN and CL capacitors.

These grade ceramic capacitors minimize capacitance-loss as a function of voltage stress.

●XCL205/XCL206/XCL207 Series F Type

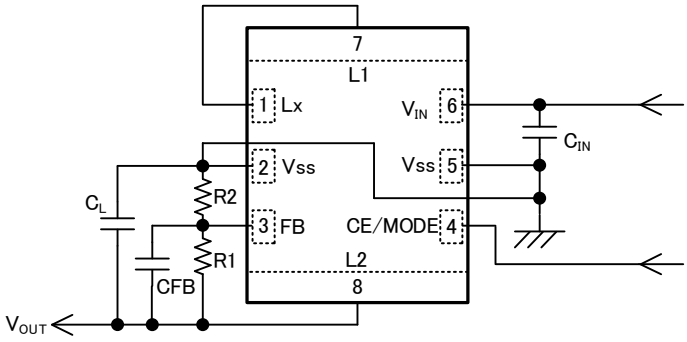

● External Components

CIN : 10V/4.7μF(Ceramic)

CL : 6.3V/10μF(Ceramic)

R1 : 300kΩ

R2 : 240kΩ

CFB : 150pF

NOTE

The Inductor can be used only for this DC/DC converter.

Please do not use this inductor for the other reasons.

Please use B, X5R, and X7R grades in temperature characteristics for CIN and CL capacitors.

These grade ceramic capacitors minimize capacitance-loss as a function of voltage stress.

<XCL205/XCL206/XCL207 F type output voltage setting>

The output voltage can be set by adding external dividing resistors. The output voltage is determined by R1 and R2 in the equation below. The sum of R1 and R2 is normally kept 1MΩor less. The output voltage range can be set from 0.9V to 6.0V based on the 0.8V ±2.0% reference voltage source.

Note that when the input voltage (V_{IN}) is less than or equal to the set output voltage, an output voltage (V_{OUT}) higher than the input voltage (V_{IN}) cannot be output.

$$V_{OUT}=0.8\times (R1+R2)/R2$$

Adjust the value of the phase compensation speedup capacitor CFB so that fzfb=1/ (2×π×CFB×R1) is 10 kHz or less. It is optimum to adjust to a value from 1kHz to 20kHbased on the components used and the board layout.

[Calculation example]

When R1=470kΩ, R2=150kΩ,

V_{OUT}=0.8× (470k+150k)/150k=3.3V

●V_{OUT} setting example

V_{OUT}(V)	R1(kΩ)	R2(kΩ)	CFB(pF)
0.9	100	820	150
1.2	150	300	100
1.5	130	150	220
1.8	300	240	150
2.5	510	240	100
3.0	330	120	150
3.3	470	150	100
4.0	120	30	470

Downloaded from Arrow.com.

■OPERATIONAL DESCRIPTION

The XCL205/XCL/206/XCL207 series consists of a reference voltage source, ramp wave circuit, error amplifier, PWM comparator, phase compensation circuit, output voltage adjustment resistors, P-channel MOSFET driver transistor, N-channel MOSFET switching transistor for the synchronous switch, current limiter circuit, UVLO circuit with control IC, and an inductor. (See the block diagram above.)

Using the error amplifier, the voltage of the internal voltage reference source is compared with the feedback voltage from the V_{OUT} pin through split resistors, R1 and R2. Phase compensation is performed on the resulting error amplifier output, to input a signal to the PWM comparator to determine the turn-on time during PWM operation. The PWM comparator compares, in terms of voltage level, the signal from the error amplifier with the ramp wave from the ramp wave circuit, and delivers the resulting output to the buffer driver circuit to cause the Lx pin to output a switching duty cycle. This process is continuously performed to ensure stable output voltage.

The current feedback circuit monitors the P-channel MOS driver transistor current for each switching operation, and modulates the error amplifier output signal to provide multiple feedback signals. This enables a stable feedback loop even when a low ESR capacitor such as a ceramic capacitor is used ensuring stable output voltage.

<Reference Voltage Source>

The reference voltage source provides the reference voltage to ensure stable output voltage of the DC/DC converter.

<Ramp Wave Circuit>

The ramp wave circuit determines switching frequency. The frequency is fixed internally 3.0MHz. Clock pulses generated in this circuit are used to produce ramp waveforms needed for PWM operation, and to synchronize all the internal circuits.

<Error Amplifier>

The error amplifier is designed to monitor output voltage. The amplifier compares the reference voltage with the feedback voltage divided by the internal split resistors, R1 and R2. When a feedback voltage is lower than the reference voltage, the output voltage of the error amplifier is increased. The gain and frequency characteristics of the error amplifier output are fixed internally to deliver an optimized signal to the mixer.

<Current Limit>

The current limiter circuit of the XCL205/XCL206/XCL207 series monitors the current flowing through the P-channel MOS driver transistor connected to the Lx pin, and features a combination of the current limit mode and the operation suspension mode.

① When the driver current is greater than a specific level, the current limit function operates to turn off the pulses from the Lx pin at any given timing.
② When the driver transistor is turned off, the limiter circuit is then released from the current limit detection state.
③ At the next pulse, the driver transistor is turned on. However, the transistor is immediately turned off in the case of an over current state.
④ When the over current state is eliminated, the IC resumes its normal operation.

The IC waits for the over current state to end by repeating the steps ① through ③. If an over current state continues for a few milliseconds and the above three steps are repeatedly performed, the IC performs the function of latching the OFF state of the driver transistor, and goes into operation suspension state. Once the IC is in suspension state, operations can be resumed by either turning the IC off via the CE/MODE pin, or by restoring power to the V_{IN} pin. The suspension state does not mean a complete shutdown, but a state in which pulse output is suspended; therefore, the internal circuitry remains in operation. The current limit of the XCL205/XCL206/XCL207 series can be set at 1050mA at typical.

Depending on the state of the PC Board, latch time may become longer and latch operation may not work. In order to avoid the effect of noise, an input capacitor is placed as close to the IC as possible.

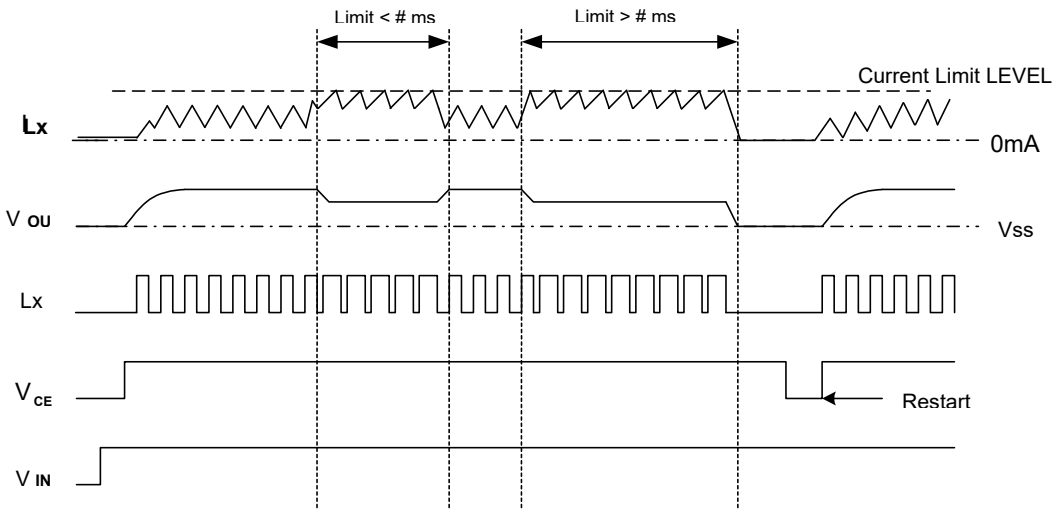

Downloaded from Arrow.com.

■OPERATIONAL DESCRIPTION (Continued)

<Short-Circuit Protection>

The short-circuit protection circuit monitors the internal R1 and R2 divider voltage from the V_{OUT} pin (refer to FB point in the block diagram shown in the previous page). In case where output is accidentally shorted to the Ground and when the FB point voltage decreases less than half of the reference voltage (Vref) and a current more than the I_{LIM} flows to the driver transistor, the short-circuit protection quickly operates to turn off and to latch the driver transistor. For the G/F series, it does not matter how much the current limit, once the FB voltage become less than the quarter of reference voltage (VREF), the short-circuit protection operates to latch the Pch MOS driver transistor

In the latch state, the operation can be resumed by either turning the IC off and on via the CE/MODE pin, or by restoring power supply to the V_{IN} pin.

When sharp load transient happens, a voltage drop at the V_{OUT} is propagated to the FB point through C_{FB}, as a result, short circuit protection may operate in the voltage higher than 1/2 V_{OUT} voltage.

<UVLO Circuit>

When the V_{IN} pin voltage becomes 1.4V or lower, the P-channel output driver transistor is forced OFF to prevent false pulse output caused by unstable operation of the internal circuitry. When the V_{IN} pin voltage becomes 1.8V or higher, switching operation takes place. By releasing the UVLO function, the IC performs the soft start function to initiate output startup operation. The soft start function operates even when the V_{IN} pin voltage falls momentarily below the UVLO operating voltage. The UVLO circuit does not cause a complete shutdown of the IC, but causes pulse output to be suspended; therefore, the internal circuitry remains in operation.

<PFM Switch Current>

In PFM control operation, until coil current reaches to a specified level (I_{PFM}), the IC keeps the P-ch MOSFET on. In this case, on-time (t_{ON}) that the P-ch MOSFET is kept on can be given by the following formula.

$$t_{ON} = L \times I_{PFM} / (V_{IN} - V_{OUT}) \quad \rightarrow I_{PFM}①$$

<PFM Duty Limit>

In the PFM control operation, the PFM Duty Limit (DTY_{LIMIT_PFM}) is set to 200% (TYP.). Therefore, under the condition that the duty increases (e.g. the condition that the step-down ratio is small), it's possible for P-ch MOSFET to be turned off even when coil current doesn't reach to I_{PFM}. →I_{PFM}②

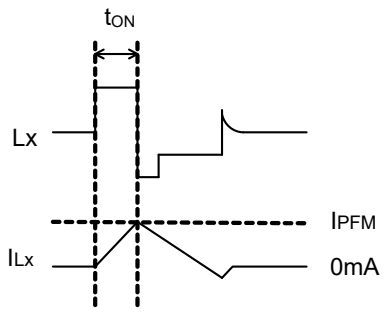

I_{PFM}①

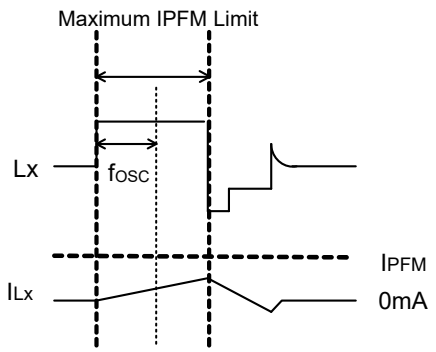

I_{PFM}②

Downloaded from Arrow.com.

CL-2025 package : Discontinued.

■OPERATIONAL DESCRIPTION (Continued)

<C_L High Speed Discharge>

The XCL205B(C,G,F)/ XCL206B(C,G,F)/ XCL207B(C,G,F) series can quickly discharge the electric charge at the output capacitor (C_L) when a low signal to the CE pin which enables a whole IC circuit put into OFF state, is inputted via the N-channel transistor located between the L_X pin and the V_{SS} pin. When the IC is disabled, electric charge at the output capacitor (C_L) is quickly discharged so that it may avoid application malfunction. Discharge time of the output capacitor (C_L) is set by the C_L auto-discharge resistance (R) and the output capacitor (C_L). By setting time constant of a C_L auto-discharge resistance value [R] and an output capacitor value (C_L) as τ (τ =C x R), discharge time of the output voltage after discharge via the N channel transistor is calculated by the following formula.

$$V = V_{OUT(T)} \times e^{-t/\tau} \quad \text{or} \quad t = \tau \ln (V_{OUT(T)} / V)$$

V : Output voltage after discharge
$V_{OUT(T)}$: Output voltage
t: Discharge time,
τ : C x R
C= Capacitance of Output capacitor (C_L)
R= C_L auto-discharge resistance

Output Voltage Discharge Characteristics

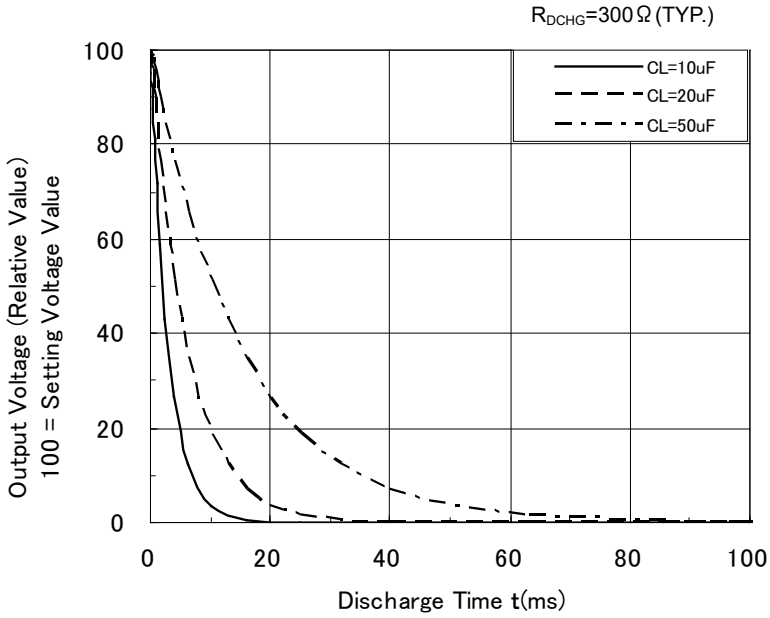

Downloaded from Arrow.com.

■OPERATIONAL DESCRIPTION (Continued)

<CE/MODE Pin Function>

The operation of the XCL205/XCL206/ XCL207 series will enter into the stand-by mode when a low level signal is input to the CE/MODE pin. During the stand-by mode, the current consumption of the IC becomes 0μA (TYP.), with a state of high impedance at the Lx pin and VOUT pin. The IC starts its operation by inputting a high level signal to the CE/MODE pin. The input to the CE/MODE pin is a CMOS input and the sink current is 0μA (TYP.).

●XCL205/XCL206 series - Examples of how to use CE/MODE pin

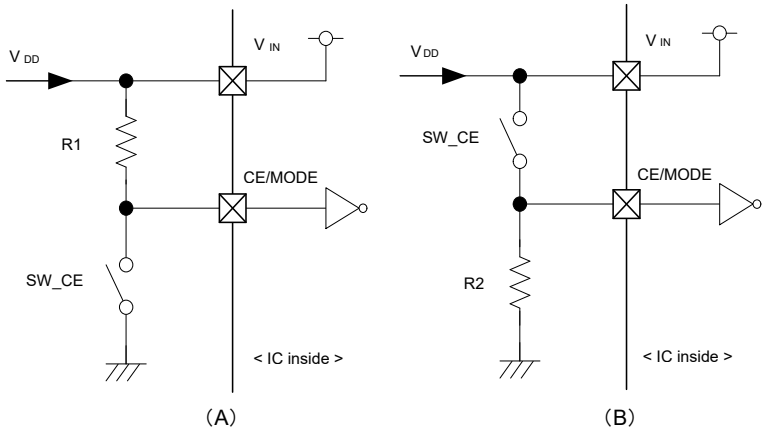

(A)

SW_CE	SELECTED STATUS
ON	Stand-by
OFF	Operation

(B)

SW_CE	SELECTED STATUS
ON	Operation
OFF	Stand-by

●XCL207 series - Examples of how to use CE/MODE pin

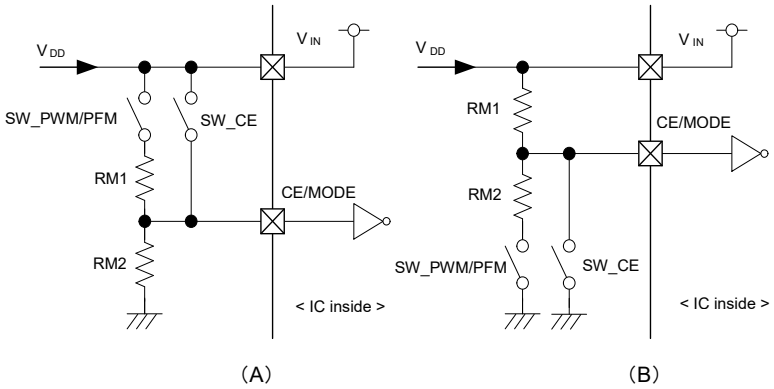

(A)

SW_CE	SW_PWM/PFM	SELECTED STATUS
ON	*	PWM/PFM Automatic Switching Control
OFF	ON	PWM Control
OFF	OFF	Stand-by

(B)

SW_CE	SW_PWM/PFM	SELECTED STATUS
ON	*	Stand-by
OFF	ON	PWM Control
OFF	OFF	PWM/PFM Automatic Switching Control

Intermediate voltage can be generated by RM1 and RM2.
Please set the value of each R1, R2, RM1, RM2 from few hundreds kΩ to few hundreds MΩ. For switches, CPU open-drain I/O port and transistor can be used.

Downloaded from Arrow.com.

■OPERATIONAL DESCRIPTION (Continued)

〈Soft Start〉

The XCL205/XCL206/XCL207 series (A, C type) provide 0.9ms (TYP). The XCL205/XCL206/XCL207 series (B, G, F type) provide 0.32ms (TYP) however, when V_{OUT} is less than 1.8V, provide 0.25ms (TYP.). Soft start time is defined as the time to reach 90% of the output nominal voltage when the CE pin is turned on.

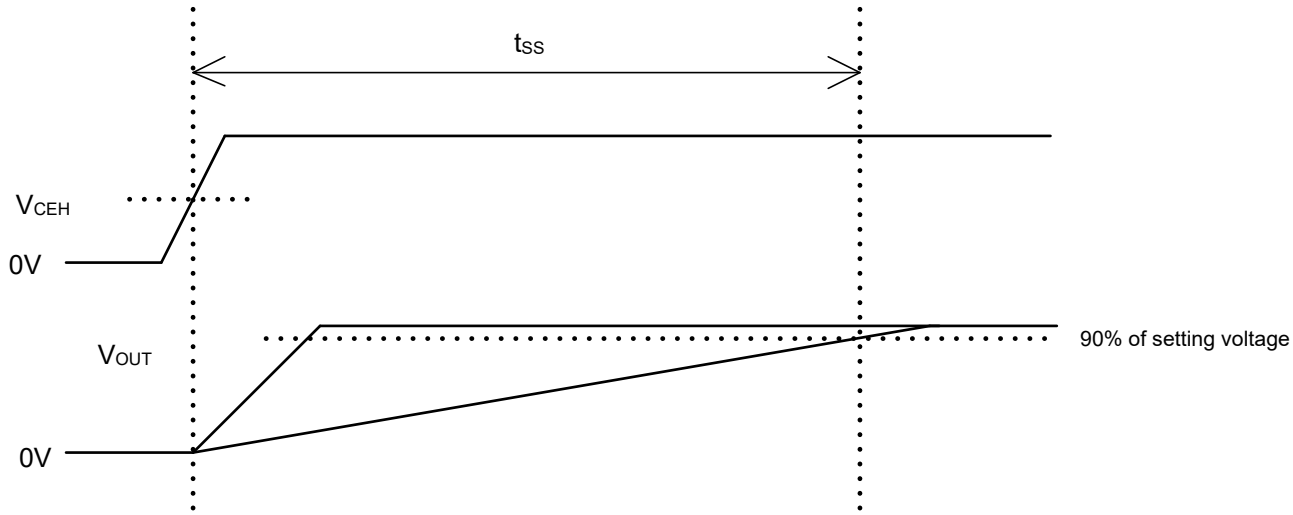

■FUNCTION CHART

CE/MODE VOLTAGE LEVEL	OPERATIONAL STATES		
	XCL205	XCL206	XCL207
H Level (*1)	Synchronous PWM Fixed Control	Synchronous PWM/PFM Automatic Switching	Synchronous PWM/PFM Automatic Switching
M Level (*2)	-	-	Synchronous PWM Fixed Control
L Level (*2)	Stand-by	Stand-by	Stand-by

Note on CE/MODE pin voltage level range

(*1) H level: 0.65V ≦ H level ≦ 6V (for XCL205/XCL206)

H level: V_{IN} – 0.25V ≦ H level ≦ V_{IN} (for XCL207)

(*2) M level: 0.65V ≦ M level ≦ V_{IN} - 1.0V (for XCL207)

(*3) L level: 0V ≦ L level ≦ 0.25V

Downloaded from Arrow.com.

■NOTE ON USE

1. The XCL205/XCL206/XCL207 series is designed for use with ceramic output capacitors. If, however, the potential difference is too large between the input voltage and the output voltage, a ceramic capacitor may fail to absorb the resulting high switching energy and oscillation could occur on the output. If the input-output potential difference is large, connect an electrolytic capacitor in parallel to compensate for insufficient capacitance.
2. Spike noise and ripple voltage arise in a switching regulator as with a DC/DC converter. These are greatly influenced by external component selection, such as the coil inductance, capacitance values, and board layout of external components. Once the design has been completed, verification with actual components should be done.
3. Depending on the input-output voltage differential, or load current, some pulses may be skipped, and the ripple voltage may increase.
4. When the difference between V_{IN} and V_{OUT} is large in PWM control, very narrow pulses will be outputted, and there is the possibility that some cycles may be skipped completely.
5. When the difference between V_{IN} and V_{OUT} is small, and the load current is heavy, very wide pulses will be outputted and there is the possibility that some cycles may be skipped completely.
6. With the IC, the peak current of the coil is controlled by the current limit circuit. Since the peak current increases when dropout voltage or load current is high, current limit starts operation, and this can lead to instability. When peak current becomes high, please adjust the coil inductance value and fully check the circuit operation. In addition, please calculate the peak current according to the following formula:

   $Ipk = (V_{IN} - V_{OUT}) \times OnDuty / (2 \times L \times f_{OSC}) + I_{OUT}$

   L: Coil Inductance Value

   f_{OSC}: Oscillation Frequency
7. When the peak current which exceeds limit current flows within the specified time, the built-in P-ch driver transistor turns off. During the time until it detects limit current and before the built-in transistor can be turned off, the current for limit current flows; therefore, care must be taken when selecting the rating for the external components such as a coil.
8. When V_{IN} is less than 2.4V, limit current may not be reached because voltage falls caused by ON resistance.
9. Depending on the state of the PC Board, latch time may become longer and latch operation may not work. In order to avoid the effect of noise, the board should be laid out so that input capacitors are placed as close to the IC as possible.
10. Use of the IC at voltages below the recommended voltage range may lead to instability.
11. This IC should be used within the stated absolute maximum ratings in order to prevent damage to the device.
12. When the IC is used in high temperature, output voltage may increase up to input voltage level at no load because of the leak current of the driver transistor.
13. The current limit is set to 1350mA (MAX.) at typical. However, the current of 1350mA or more may flow. In case that the current limit functions while the V_{OUT} pin is shorted to the GND pin, when P-ch MOSFET is ON, the potential difference for input voltage will occur at both ends of a coil. For this, the time rate of coil current becomes large. By contrast, when N-ch MOSFET is ON, there is almost no potential difference at both ends of the coil since the V_{OUT} pin is shorted to the GND pin. Consequently, the time rate of coil current becomes quite small. According to the repetition of this operation, and the delay time of the circuit, coil current will be converged on a certain current value, exceeding the amount of current, which is supposed to be limited originally. Even in this case, however, after the over current state continues for several ms, the circuit will be latched. A coil should be used within the stated absolute maximum rating in order to prevent damage to the device.

   ①Current flows into P-ch MOSFET to reach the current limit (I_{LIM}).

   ②The current of I_{LIM} or more flows since the delay time of the circuit occurs during from the detection of the current limit to OFF of P-ch MOSFET.

   ③Because of no potential difference at both ends of the coil, the time rate of coil current becomes quite small.

   ④Lx oscillates very narrow pulses by the current limit for several ms.

   ⑤The circuit is latched, stopping its operation.

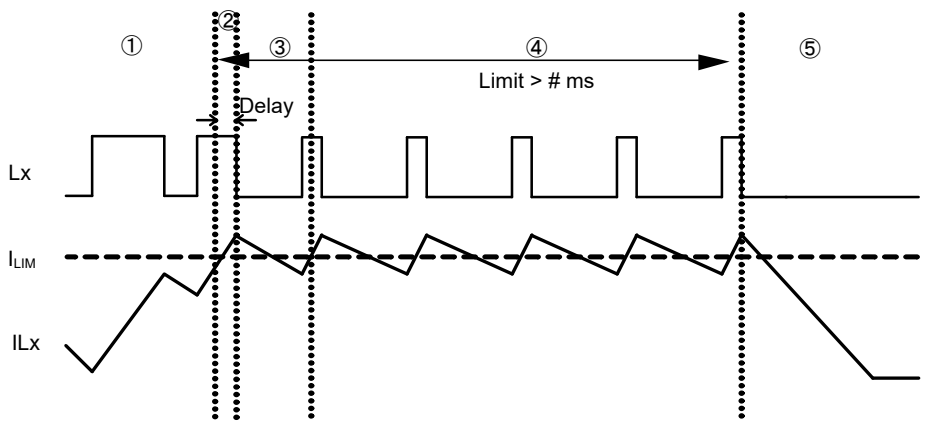

Downloaded from Arrow.com.

CL-2025 package : Discontinued.

■NOTE ON USE (Continued)

14. In order to stabilize V_{IN} voltage level and oscillation frequency, we recommend that a by-pass capacitor (C_{IN}) be connected as close as possible to the V_{IN} & V_{SS} pins.

15. High step-down ratio and very light load may lead an intermittent oscillation when PWM mode.

16. Please use within the power dissipation range below. Please also note that the power dissipation may change by test conditions. The power dissipation figure shown is PCB mounted.

17. The proper position of mounting is based on the coil terminal

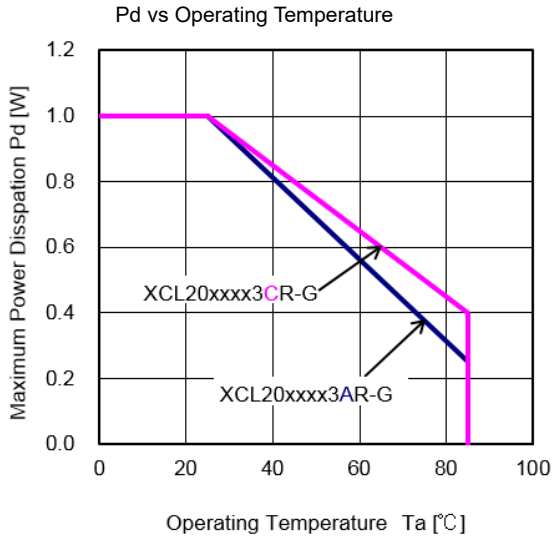

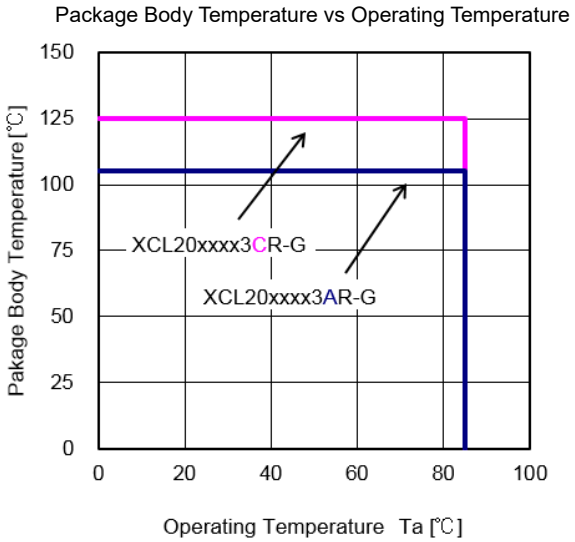

The power loss of micro DC/DC according to the following formula:

power loss = $V_{OUT} \times I_{OUT} \times ((100/EFFI) - 1)$ (W)

V_{OUT} : Output Voltage (V)
I_{OUT} : Output Current (A)
EFFI : Conversion Efficiency (%)

Downloaded from Arrow.com.

■NOTE ON USE (Continued)

18. Instructions of pattern layouts

(1) In order to stabilize V_{IN} voltage level, we recommend that a by-pass capacitor (C_{IN}) be connected as close as possible to the V_{IN} (No.6) & V_{SS} (No.5) pins.
(2) Please mount each external component as close to the IC as possible.
(3) Wire external components as close to the IC as possible and use thick, short connecting traces to reduce the circuit impedance.
(4) Make sure that the PCB GND traces are as thick as possible, as variations in ground potential caused by high ground currents at the time of switching may result in instability of the IC.
(5) This series' internal driver transistors bring on heat because of the output current and ON resistance of driver transistors.
(6) Please connect Lx (No.1) pin and L1 (No.7) pin by wiring on the PCB.
(7) Please connect V_{OUT} (No.3) pin and L2 (No.8) pin by wiring on the PCB.

・A/B/C/G types

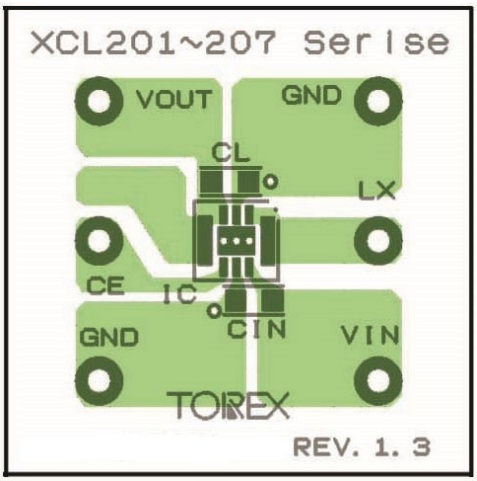

<FRONT>

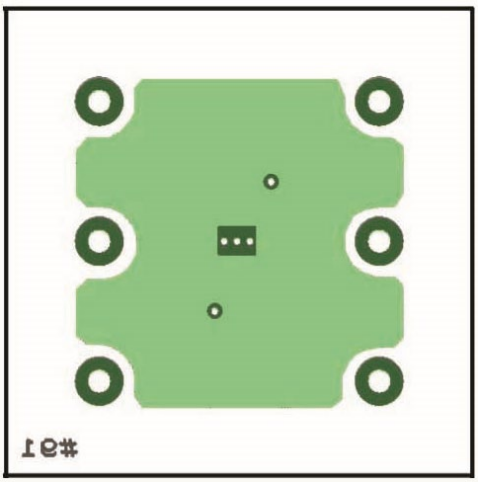

<BACK (Flip Horizontal)>

・F type

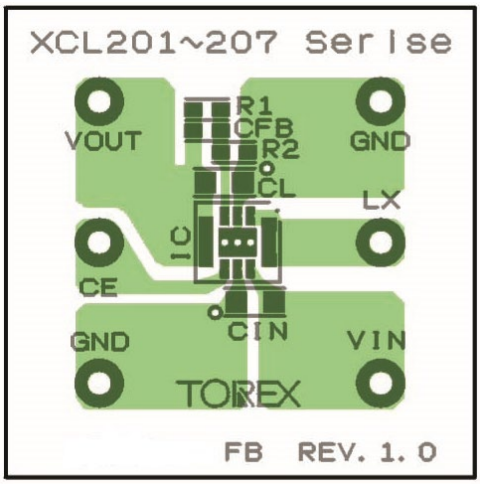

<FRONT>

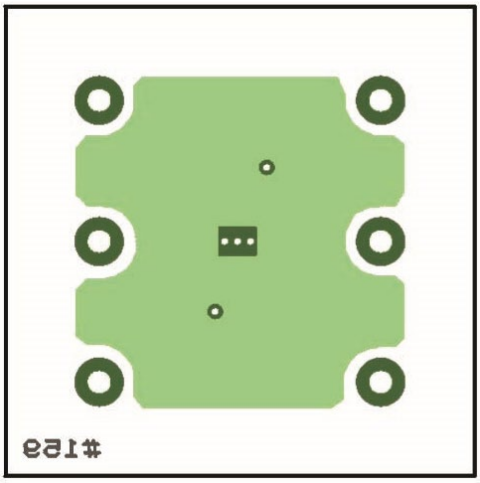

<BACK (Flip Horizontal)>

Downloaded from Arrow.com.

CL-2025 package : Discontinued.

■TYPICAL PERFORMANCE CHARACTERISTICS

(1) Efficiency vs. Output Current

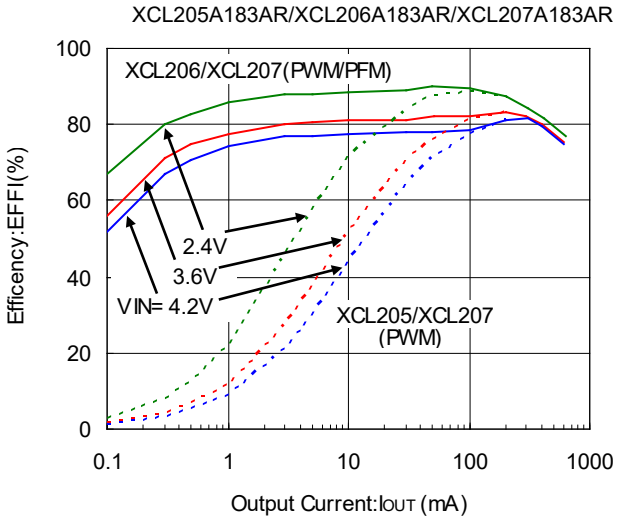

(2) Output Voltage vs. Output Current

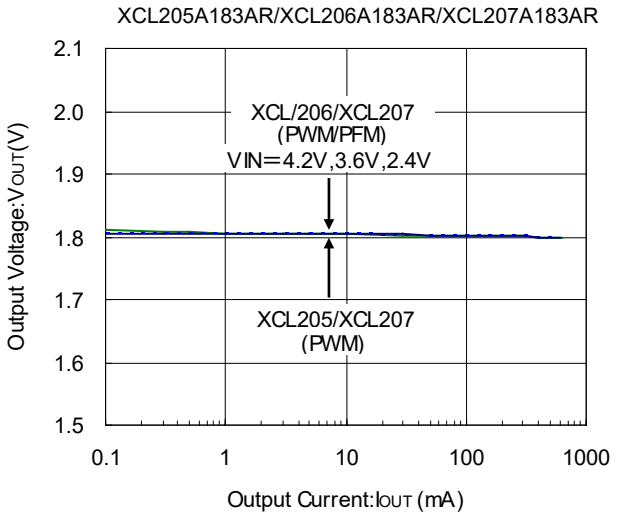

(3) Ripple Voltage vs. Output Current

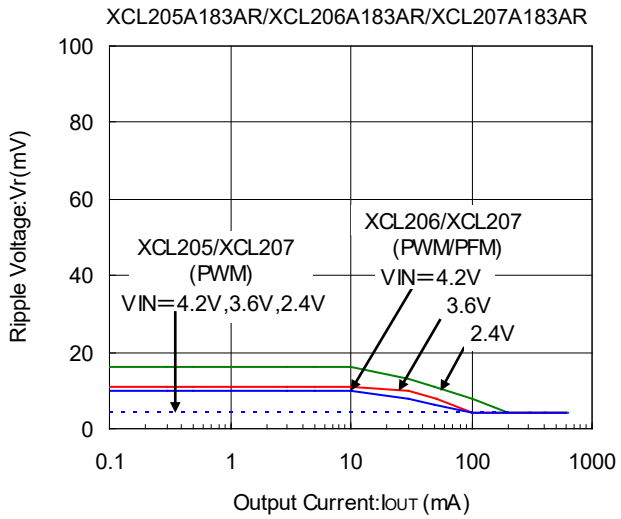

(4) Oscillation Frequency vs. Ambient Temperature

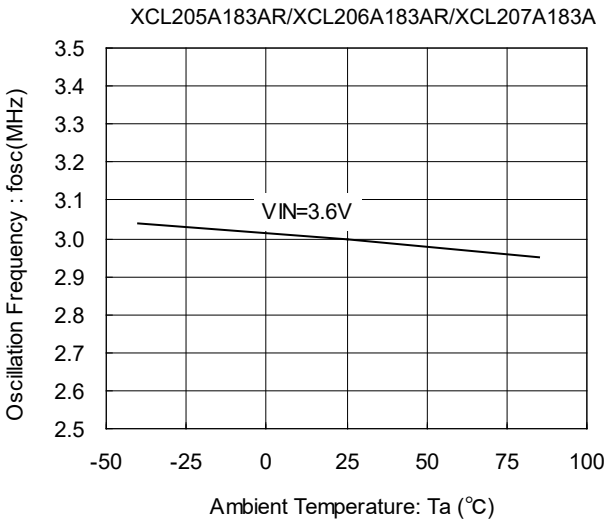

(5) Supply Current vs. Ambient Temperature

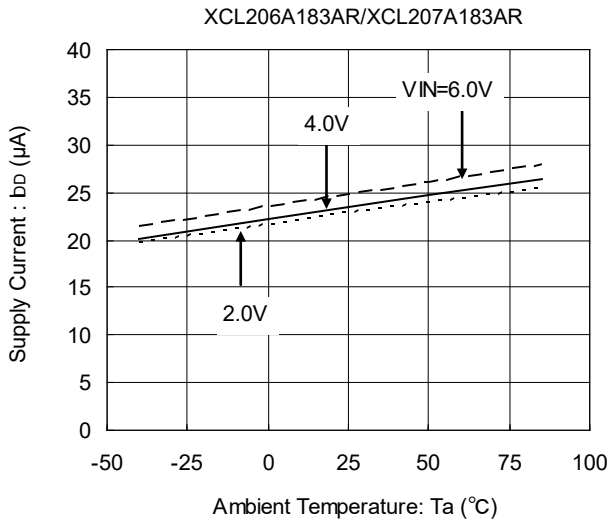

(6) Output Voltage vs. Ambient Temperature

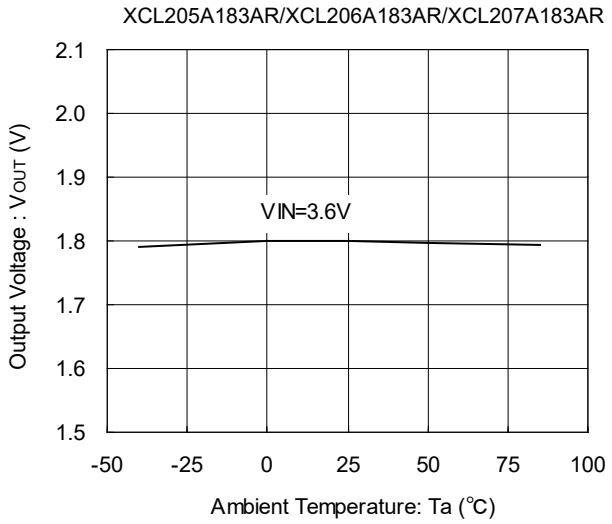

Downloaded from Arrow.com.

■TYPICAL PERFORMANCE CHARACTERISTICS (Continued)

(7) UVLO Voltage vs. Ambient Temperature

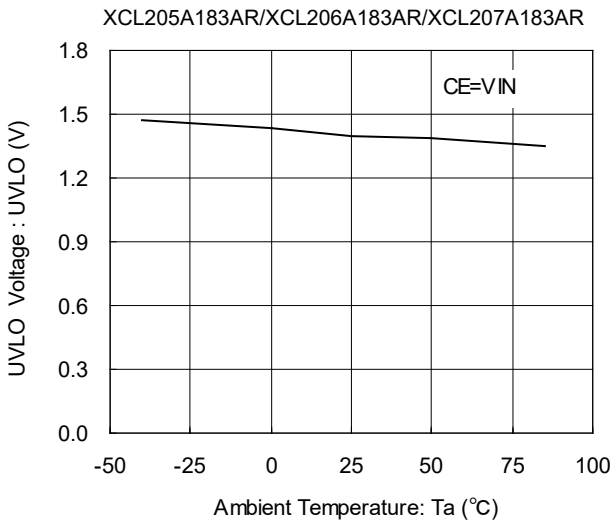

(8) CE "H" Voltage vs. Ambient Temperature

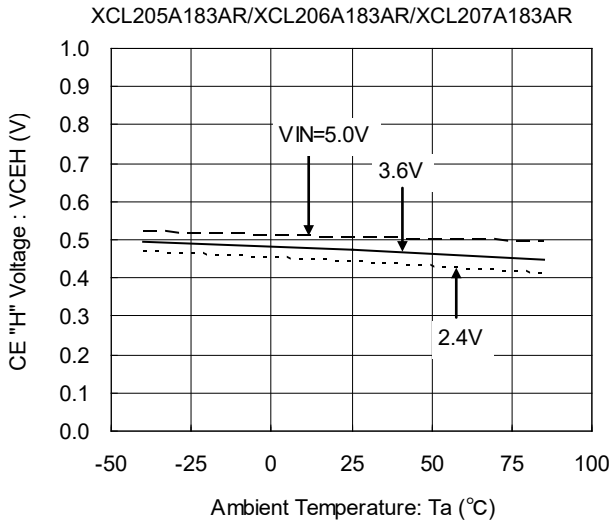

(9) CE "L" Voltage vs. Ambient Temperature

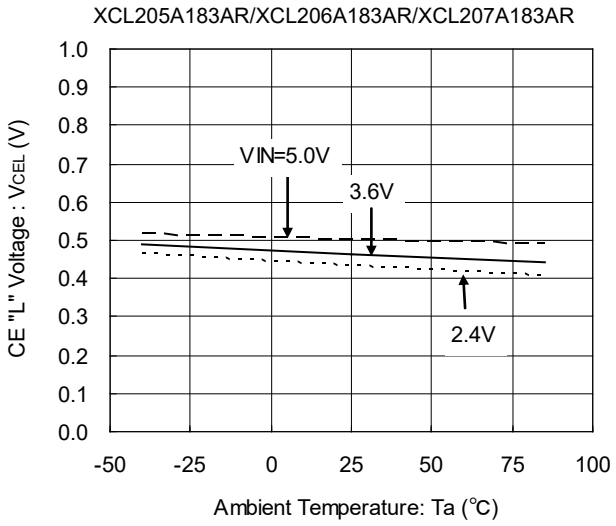

(10) Soft Start Time vs. Ambient Temperature

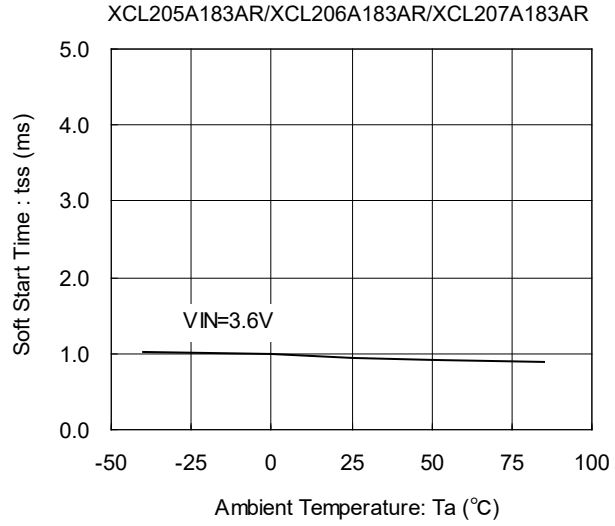

(11) "Pch / Nch" Driver on Resistance vs. Input Voltage

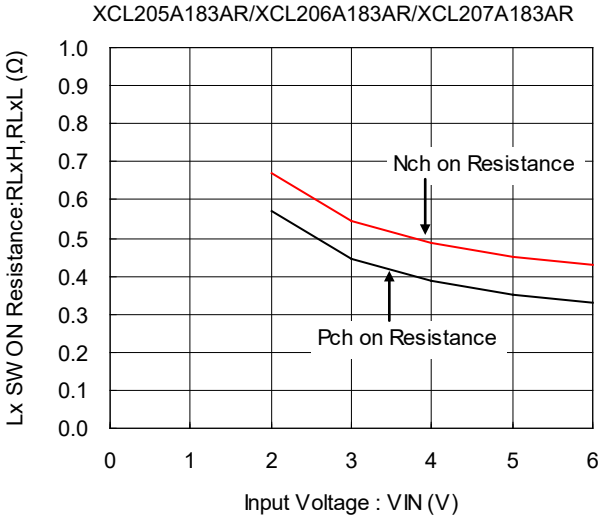

(12) Rise Wave Form

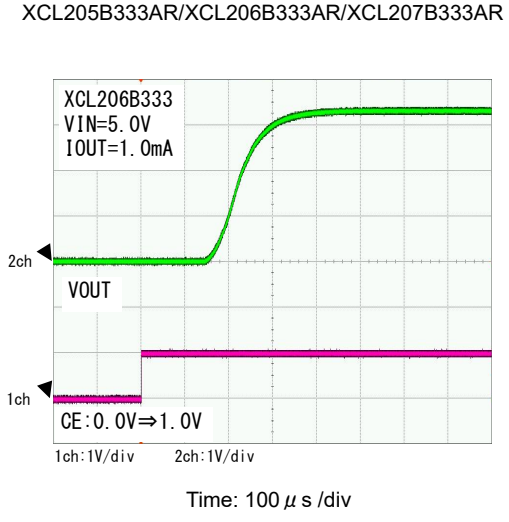

Downloaded from Arrow.com.

CL-2025 package : Discontinued.

■TYPICAL PERFORMANCE CHARACTERISTICS (Continued)

(13) Soft-Start Time vs. Ambient Temperature

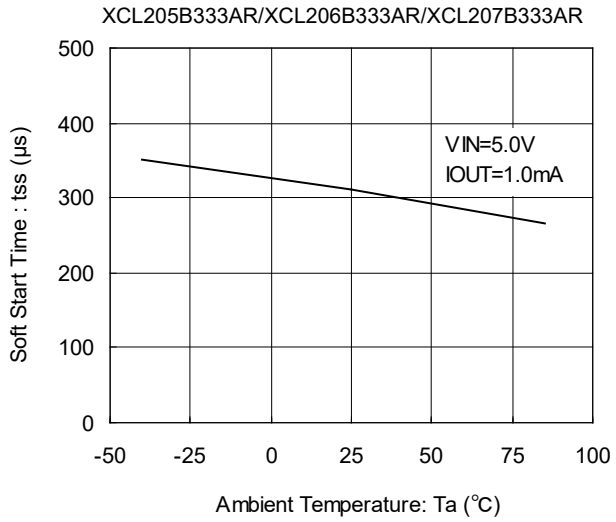

(14) CL Discharge Resistance vs. Ambient Temperature

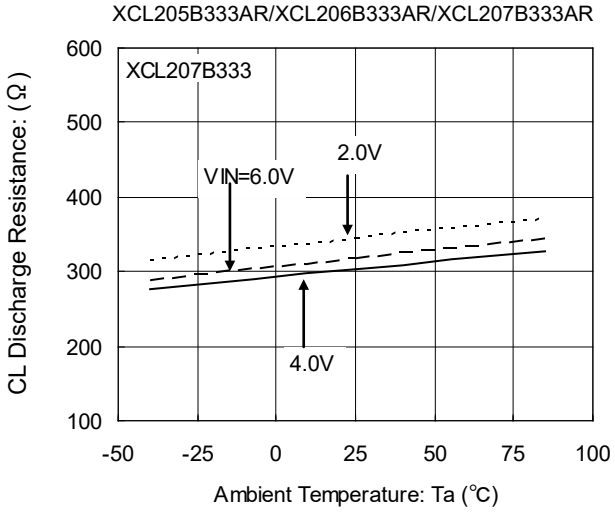

(15) Load Transient Response 1

MODE : PWM/PFM Automatic Switching Control

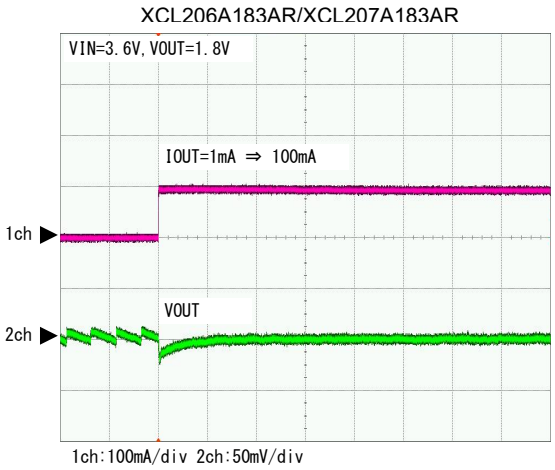

Time: 100μs /div

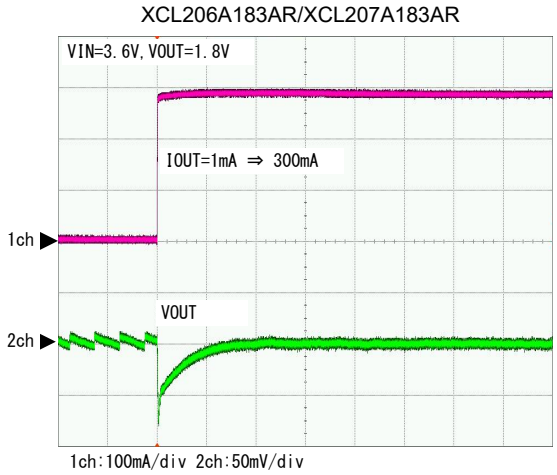

Time: 100μs /div

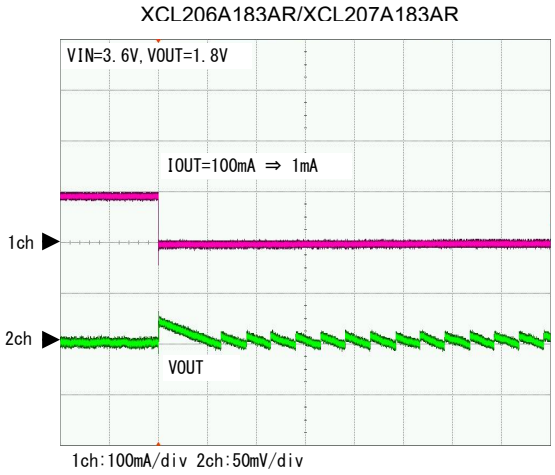

Time: 100μs /div

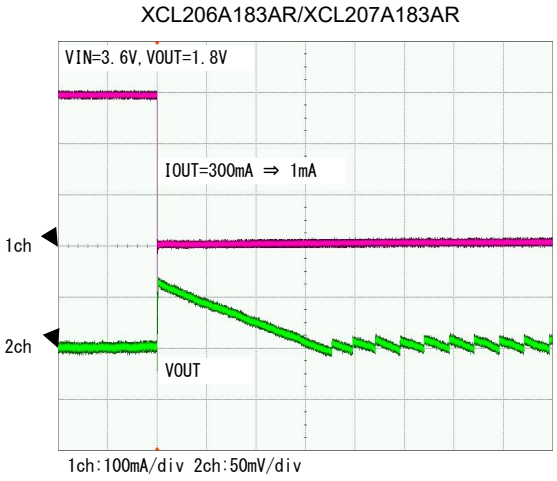

Time: 100μs /div

Downloaded from Arrow.com.

■TYPICAL PERFORMANCE CHARACTERISTICS (Continued)

(16) Load Transient Response 2

MODE：PWM Control

XCL205A183AR/XCL207A183AR

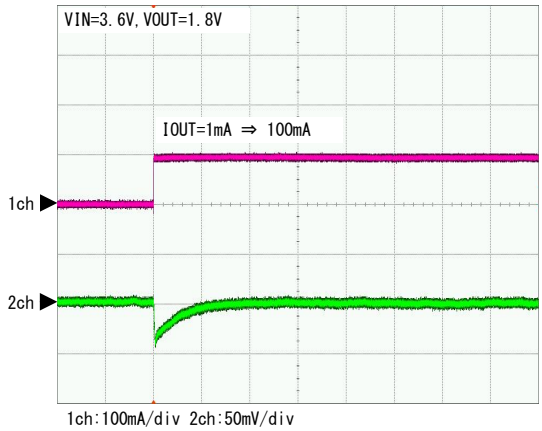

Time: 100μs /div

XCL205A183AR/XCL207A183AR

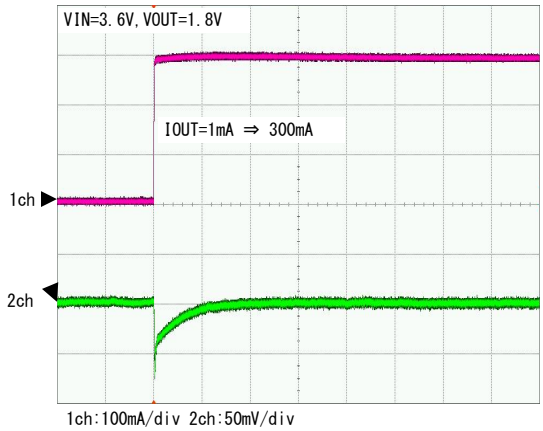

Time: 100μs /div

XCL205A183AR/XCL207A183AR

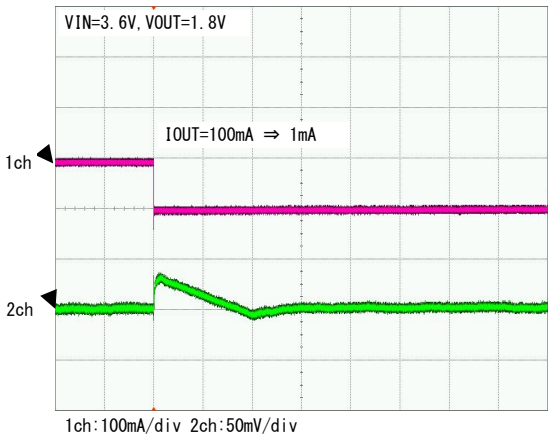

Time: 100μs /div

XCL205A183AR/XCL207A183AR

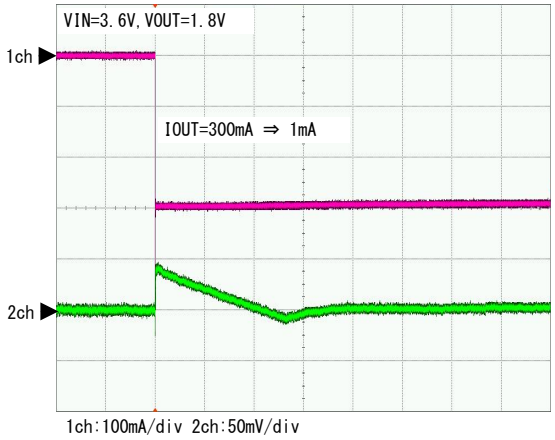

Time: 100μs /div

Downloaded from Arrow.com.

CL-2025 package : Discontinued.

■PACKAGING INFORMATION

For the latest package information go to, www.torexsemi.com/technical-support/packages

PACKAGE	OUTLINE / LAND PATTERN	THERMAL CHARACTERISTICS
CL-2025	CL-2025 PKG	CL-2025 Power Dissipation
CL-2025-02	CL-2025-02 PKG	CL-2025-02 Power Dissipation

Downloaded from Arrow.com.

■MARKING RULE

●CL-2025/CL-2025-02

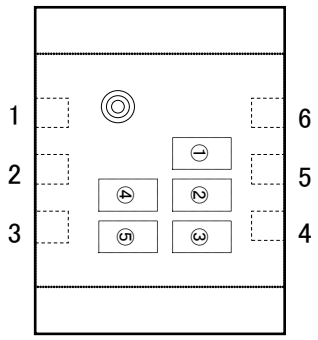

① represents products series

MARK	PRODUCT SERIES
4	XCL205A*****-G
	XCL205F*****-G
C	XCL205B*****-G
	XCL205G*****-G
K	XCL205C*****-G
5	XCL206A*****-G
	XCL206F*****-G
D	XCL206B*****-G
	XCL206G*****-G
L	XCL206C*****-G
6	XCL207A*****-G
	XCL207F*****-G
E	XCL207B*****-G
	XCL207G*****-G
M	XCL207C*****-G

② represents type of DC/DC converters

OUTPUT VOLTAGE (V)	MARK	
	XCL20*A/B/C*****	XCL20*G/F*****
0.x	F	U
1.x	H	V
2.x	K	X
3.x	L	Y
4.x	M	Z

③ represents the decimal part of output voltage

OUTPUT VOLTAGE (V)	MARK	PRODUCT SERIES
X.0	0	XCL20***0***-G
X.05	A	XCL20***A***-G
X.1	1	XCL20***1***-G
X.15	B	XCL20***B***-G
X.2	2	XCL20***2***-G
X.25	C	XCL20***C***-G
X.3	3	XCL20***3***-G
X.35	D	XCL20***D***-G
X.4	4	XCL20***4***-G
X.45	E	XCL20***E***-G
X.5	5	XCL20***5***-G
X.55	F	XCL20***F***-G
X.6	6	XCL20***6***-G
X.65	H	XCL20***H***-G
X.7	7	XCL20***7***-G
X.75	K	XCL20***K***-G
X.8	8	XCL20***8***-G
X.85	L	XCL20***L***-G
X.9	9	XCL20***9***-G
X.95	M	XCL20***M***-G

④,⑤ represents production lot number

01～09、0A～0Z、11～9Z、A1～A9、AA～AZ、B1～ZZ in order.

(G, I, J, O, Q, W excluded)　Note: No character inversion used.

Downloaded from Arrow.com.

CL-2025 package : Discontinued.

1. The product and product specifications contained herein are subject to change without notice to improve performance characteristics. Consult us, or our representatives before use, to confirm that the information in this datasheet is up to date.

2. The information in this datasheet is intended to illustrate the operation and characteristics of our products. We neither make warranties or representations with respect to the accuracy or completeness of the information contained in this datasheet nor grant any license to any intellectual property rights of ours or any third party concerning with the information in this datasheet.

3. Applicable export control laws and regulations should be complied and the procedures required by such laws and regulations should also be followed, when the product or any information contained in this datasheet is exported.

4. The product is neither intended nor warranted for use in equipment of systems which require extremely high levels of quality and/or reliability and/or a malfunction or failure which may cause loss of human life, bodily injury, serious property damage including but not limited to devices or equipment used in 1) nuclear facilities, 2) aerospace industry, 3) medical facilities, 4) automobile industry and other transportation industry and 5) safety devices and safety equipment to control combustions and explosions. Do not use the product for the above use unless agreed by us in writing in advance.

5. Although we make continuous efforts to improve the quality and reliability of our products; nevertheless Semiconductors are likely to fail with a certain probability. So in order to prevent personal injury and/or property damage resulting from such failure, customers are required to incorporate adequate safety measures in their designs, such as system fail safes, redundancy and fire prevention features.

6. Our products are not designed to be Radiation-resistant.

7. Please use the product listed in this datasheet within the specified ranges.

8. We assume no responsibility for damage or loss due to abnormal use.

9. All rights reserved. No part of this datasheet may be copied or reproduced unless agreed by Torex Semiconductor Ltd in writing in advance.

TOREX SEMICONDUCTOR LTD.

Downloaded from Arrow.com.