THIS DRAWING IS UNPUBLISHED.
DIFFUSION RESTREINTE AMP

RELEASED FOR PUBLICATION 20
LIBRE A LA DIFFUSION

© COPYRIGHT 20 BY -
ALL RIGHTS RESERVED.
TOUS DROITS RESERVES

REVISIONS					
P	LTR REV	DESCRIPTION MODIFICATIONS	DATE	DWN DESS.	APVD APP.
	M	CLARIFICATION AND RELEASE	23SEP2009	JT	YP
	P	CLARIFICATION	28OCT2013	JT	YP

SCALE 1:1

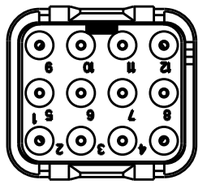

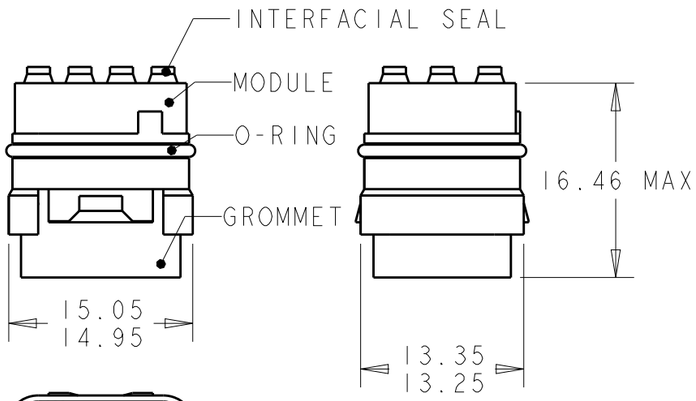

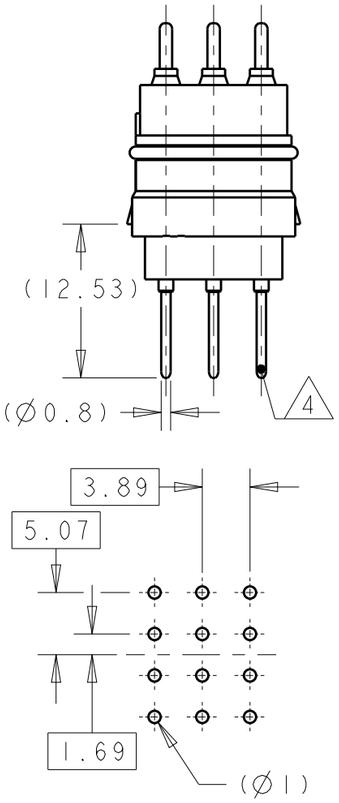

RECOMMENDED PCB LAYOUT

1. MATERIALS:
   HOUSING: HIGH TEMPERATURE THERMOPLASTIC.
   GROMMET ,INTERFACIAL SEAL AND O-RING: FLUOROSILICONE RUBBER.
2. MARKING: CONTACT CAVITY ID, CODING, MANUFACTURER LOGO, DATE CODE

3 DELIVERED WITHOUT CONTACTS

4 ASSEMBLED WITH 12 PCB CONTACTS PN 1577151-1.
SOLDER POST AREA COATED WITH SnPb.

NOTE	DESIGNATION PER EN 4165	CODING	DESCRIPTION	PART NUMBER
4	-	N	MODULE ASSY, EN 4165, 12-20, MALE	2-1577133-5
4	-	D	MODULE ASSY, EN 4165, 12-20, MALE	2-1577133-4
4	-	C	MODULE ASSY, EN 4165, 12-20, MALE	2-1577133-3
4	-	B	MODULE ASSY, EN 4165, 12-20, MALE	2-1577133-2
4	-	A	MODULE ASSY, EN 4165, 12-20, MALE	2-1577133-1
3	EN4165A12-202NA	N	MODULE, EN 4165, 12-20, MALE	1577133-5
3	EN4165A12-202DA	D	MODULE, EN 4165, 12-20, MALE	1577133-4
3	EN4165A12-202CA	C	MODULE, EN 4165, 12-20, MALE	1577133-3
3	EN4165A12-202BA	B	MODULE, EN 4165, 12-20, MALE	1577133-2
3	EN4165A12-202AA	A	MODULE, EN 4165, 12-20, MALE	1577133-1

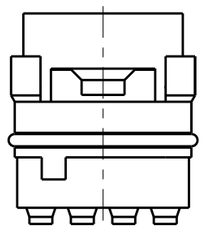

STANDARD CODING N

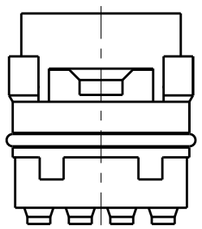

CODING A

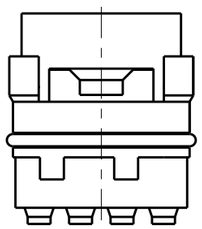

CODING B

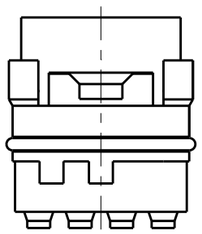

CODING C

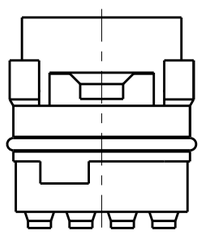

CODING D

THIS DRAWING IS A CONTROLLED DOCUMENT.
CE PLAN EST UN DOCUMENT CONTROLE PAR AMP INCORPORATED.
IL EST SUSCEPTIBLE D'ETRE REVISE. CONTACTER LE SERVICE TECHNIQUE D'AMP DE FRANCE POUR OBTENIR LA DERNIERE REVISION.

DIMENSIONS: mm

TOLERANCES UNLESS OTHERWISE SPECIFIED:
TOLERANCES NON SPECIFIEES (SUIV NB DE DECIMALES):
0 PLC/DEC: ±-
1 PLC/DEC: ±-
2 PLC/DEC: ±-
3 PLC/DEC: ±-
4 PLC/DEC: ±-
ANGLES ±1

MATERIAL MATIERE: NOTE 1 / -

FINISH FINITION: - / -

DWN/DESSINE: 16SEP2004 Thierry CORRIOU
CHK/VERIFIE: 16SEP2004 Yves PETRONIN
APVD/APPROUVE: 16SEP2004 Miguel FURIO

PRODUCT SPEC SPEC. PRODUIT: 108-15384
APPLICATION SPEC SPEC. APPLICATION: 114-15211
WEIGHT MASSE APPROX.: 2,80 g

TE Connectivity

NAME TITRE: MODULE, EN4165, 12-20, SEALED
-
-

SIZE FORMAT: A3
CAGE CODE: -
DRAWING NO No PLAN: C-1577133
RESTRICTED TO RESERVE A: -

Customer Drawing /PLAN CLIENT UNIQUEMENT POUR REFERENCE
SCALE ECHELLE: 2:1
SHEET FEUILLE 1 OF DE 1
REV P

1470-19 (3/13)

Downloaded from Arrow.com.