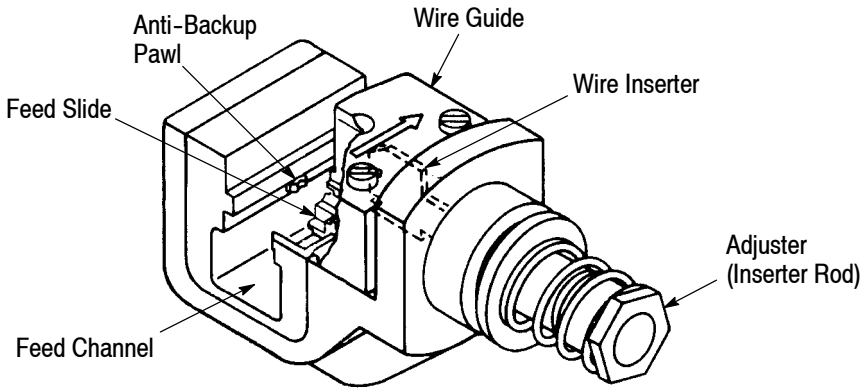

Figure 1

1. INTRODUCTION

Terminating Head 58063-2 is designed to terminate *unstripped* discrete wire sizes 30 through 20 AWG onto AMPLIMITE HDE-20 all plastic connectors (reference part number 745203-2) and metal shell connectors (reference part number 745492-2). These connectors contain insulation displacement contacts.

The head must be used with one of the following power units (for operating procedure, refer to the instructions packaged with the power unit).

Power Unit	Instruction Sheet (408) or Customer Manual (409)
Pistol Grip Manual Handle Assembly 58074-1	408-6790
Pistol Grip Pneumatic Handle Assembly 58075-1	408-6789
Pneumatic Power Bench Assembly 58338-1	408-9393
Electric Power Unit 931800-1	409-5746

NOTE

Dimensions in this instruction sheet are in metric units [with U.S. customary units in brackets]. Figures are not drawn to scale.

Reasons for reissue of this instruction sheet are provided in Section 7, REVISION SUMMARY.

2. DESCRIPTION (Figure 1)

Features of the head and their function are as follows:

Wire inserter—forces the wire into the slotted beams of the contact.

Wire guide—holds the connector properly in relation to the wire.

Adjuster (inserter rod)—is a piston for, and regulates the travel of, the wire inserter.

Feed slide—automatically advances the connector after each termination.

Anti-backup pawl—prevents the connector from moving out of position after it has been advanced by the feed slide.

After the head is installed onto the power unit, it serves as a guide and support for the connector during termination. The arrow on the top of the head indicates the direction that the connector will move in the head. The wires are terminated onto the connector using the insulation displacement technique.

3. TERMINATION PROCEDURE

Make sure that the connector matches the wire size to be terminated, then refer to Figure 2, and proceed as follows:

1. Align the side of the connector with the side of the head (so that it will move in the direction of the arrow), and *slowly* slide the connector into the feed channel. Stop when the desired contact position aligns with the wire slot.

NOTE

If the connector cannot be inserted into the head or if the connector is too loose in the head, refer to Paragraph 4.2 for wire guide adjustment.

2. Insert the wire into the wire slot until the wire bottoms on the head.

3. Center the wire in the wire slot, then actuate the power unit until the wire inserter bottoms (the wire inserter will retract, and the connector will advance to the next contact position).

©2010 Tyco Electronics Corporation, Berwyn, PA
All Rights Reserved
TE logo and Tyco Electronics are trademarks.
*Trademark. Other products names, logos, or company names might be trademarks of their respective owners.

Downloaded from Arrow.com.

Terminating Connector

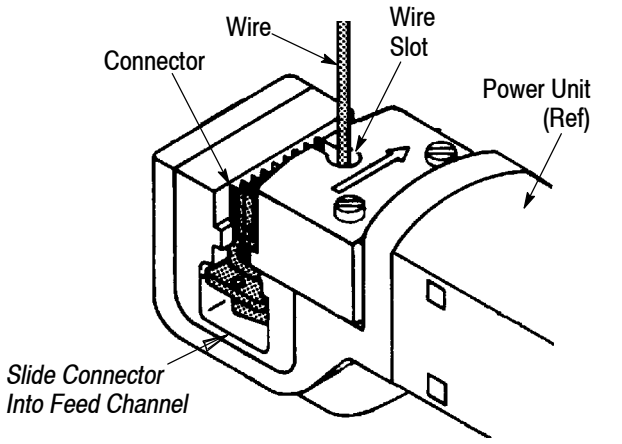

Figure 2

4. Repeat Steps 2 and 3 until all applicable contacts are terminated.

5. Slide the connector out of the head in the direction of the arrow.

6. Inspect each terminated contact according to Figure 4. If any contact does not meet the requirements, DO NOT use the connector. Refer to Section 4 for adjustments.

NOTE

For application requirements for the connectors, refer to application specification 114-40002.

For assembly procedure, refer to 408-6621 for all plastic connectors and 408-6645 for metal shell connectors.

4. ADJUSTMENTS

4.1. Wire Insertion Depth

If the wire is inserted too deep or not deep enough in the contact after termination, adjust the wire insertion depth as follows:

A. Pneumatic Power Units

DANGER

To avoid personal injury when using pneumatic power units, ALWAYS disconnect the air supply before making any adjustments.

Increase the air pressure by 10 psi [69 kPa]. Repeat the termination and inspection procedure. Continue in this manner until the proper wire insertion depth is obtained or the air pressure is set to 70 psi [483 kPa]. If proper wire insertion depth is not obtained at 70 psi [483 kPa], return the air pressure to 40 psi [276 kPa] and follow Paragraph B.

NOTE

For pneumatic power units, it might be necessary to adjust either the air pressure or the adjuster (inserter rod).

B. Manual and Electric Power Units

DANGER

To prevent personal injury when using electric power units, ALWAYS disconnect the electrical power supply before making any adjustments.

1. Remove the head from the power unit according to the instructions packaged with the power unit. Make sure to observe any cautions and dangers.

2. Turn the adjuster (inserter rod) one-sixth of a revolution *clockwise* if the wire is too deep in the contact, and *counterclockwise* if the wire is not deep enough in the contact. Refer to Figure 3. This will decrease or increase the wire insertion depth by approximately 0.20 mm [.008 in.].

3. Install the head onto the power unit according to the instructions packaged with the power unit. Make sure to observe any cautions and dangers.

Wire Insertion Depth Adjustment

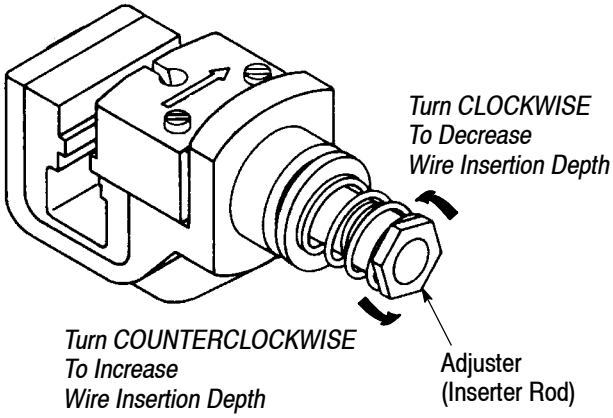

Figure 3

4.2. Wire Guide

If the connector cannot be inserted into the head, the connector is too loose in the head, or the connector housing is damaged after termination, refer to Figure 1, and adjust the wire guide as follows:

1. For pneumatic power units, disconnect the air supply. For electric power units, disconnect the electrical power supply.

2. Loosen the two screws on the wire guide.

3. Slide the wire guide until the connector fits properly in the head.

4. Finger-tighten the screws.

5. INSPECTION AND MAINTENANCE

5.1. Inspection

Regular inspections should be performed by quality control personnel with a record of quality control inspections remaining with the personnel responsible

Downloaded from Arrow.com.

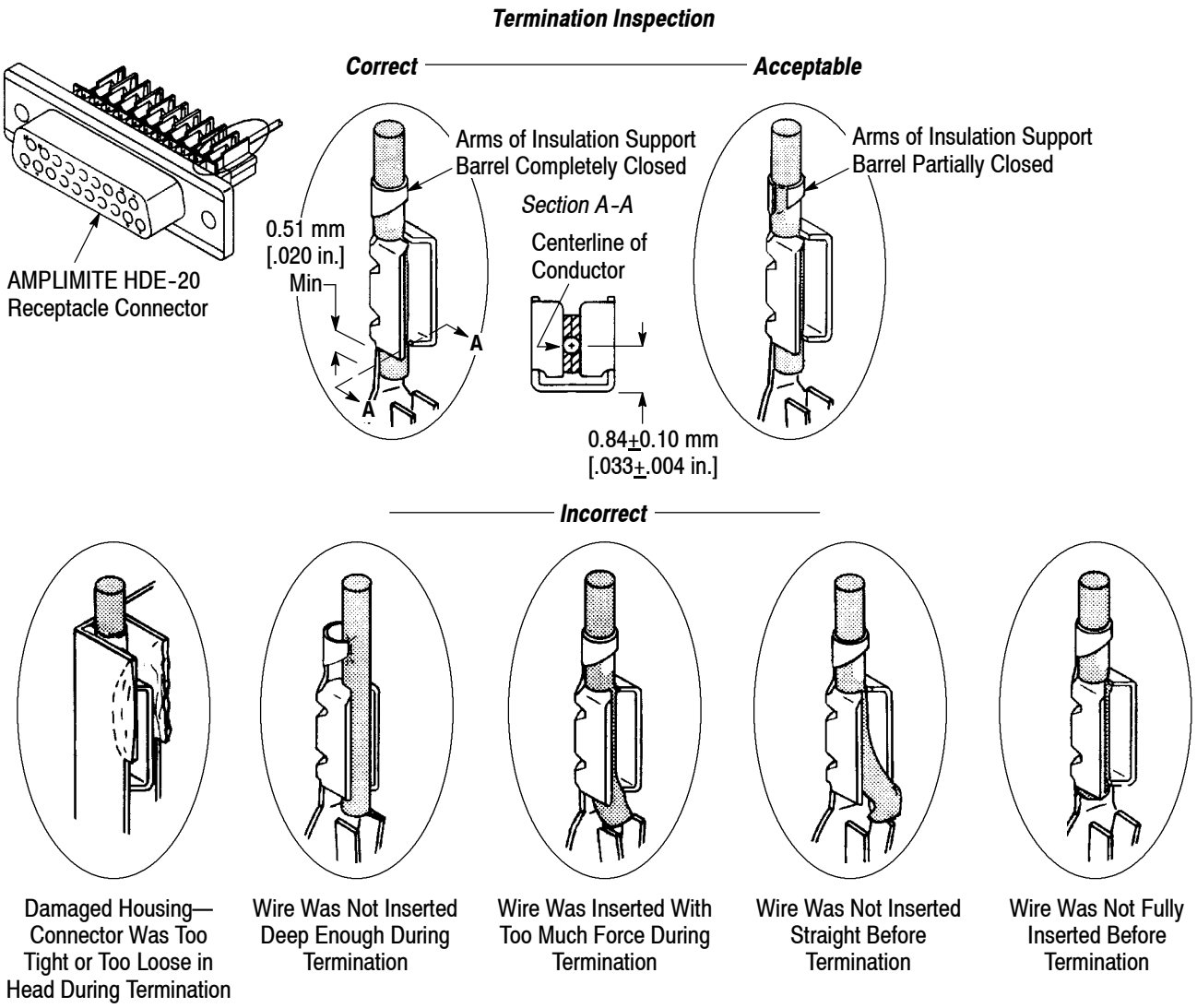

Figure 4

for the head. One inspection per month is the recommended frequency; however, operator training and skill, amount of use, working conditions, and established company standards are all factors to be considered in establishing inspection frequency.

5.2. Daily Maintenance

1. Remove dust, moisture, and other contaminants with a clean, soft brush or lint-free cloth. DO NOT use objects that could damage the head.

2. Make sure that all components are in place and properly secured.

3. Make sure that the mechanisms inside the head function smoothly.

5.3. Periodic Maintenance

1. Remove any accumulated film with a suitable cleaning agent that will not affect plastic.

2. Check for chipped, cracked, worn, or broken areas on the head. If damage is evident, repair or replace the head.

6. REPLACEMENT AND REPAIR

Customer-replaceable parts are listed in Figure 5. A complete inventory should be stocked and controlled to prevent lost time when replacement of parts is necessary. Parts other than those listed should be replaced by Tyco Electronics to ensure quality and reliability. Order replacement parts through your representative, or call 1-800-526-5142, or send a facsimile of your purchase order to 717-986-7605, or write to:

CUSTOMER SERVICE (038-035)
TYCO ELECTRONICS CORPORATION
PO BOX 3608
HARRISBURG PA 17105-3608

For customer repair service, call 1-800-526-5136.

Downloaded from Arrow.com.

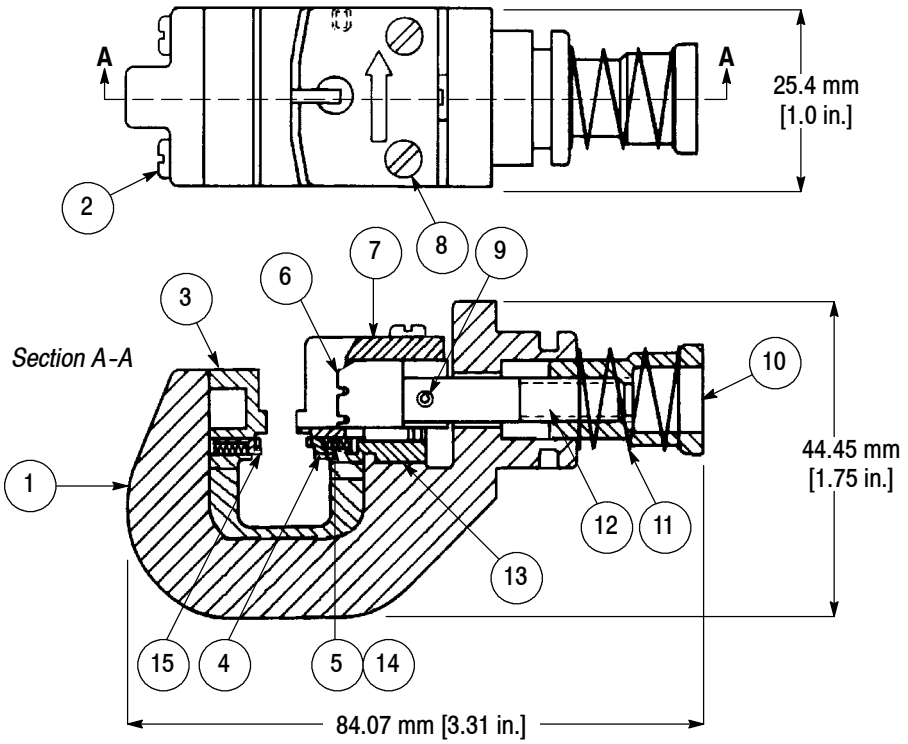

REPLACEMENT PARTS			
ITEM	PART NUMBER	DESCRIPTION	QTY PER HEAD
1	312331-1	HEAD	1
2	28593-1	SCREW, Self-Tapping	2
3	314011-1	HOUSING, Insert	1
4	314012-1	PAWL	1
5	1-23147-1	SPRING, Compression	2
6	312339-1	INSERTER, Wire	1
7	312340-1	GUIDE, Wire	1
8	4-23715-7	SCREW, Machine, 4-40 × .750 in. L	2
9	3-21028-2	PIN, Slotted Spring	1
10	312149-1	ADJUSTER (Inserter Rod)	1
11	22488-5	SPRING, Compression	1
12	312148-2	ROD, Inserter	1
13	314013-1	SLIDE, Feed	1
14	304580	PIN, Spirol	1
15	314014-1	PAWL, Locator	1

Figure 5

7. REVISION SUMMARY

Revisions to this instruction sheet include:

- Updated instruction sheet to corporate requirements
- Added Original Instructions to page 1
- Corrected part number of Item 5 in Figure 5

Downloaded from Arrow.com.