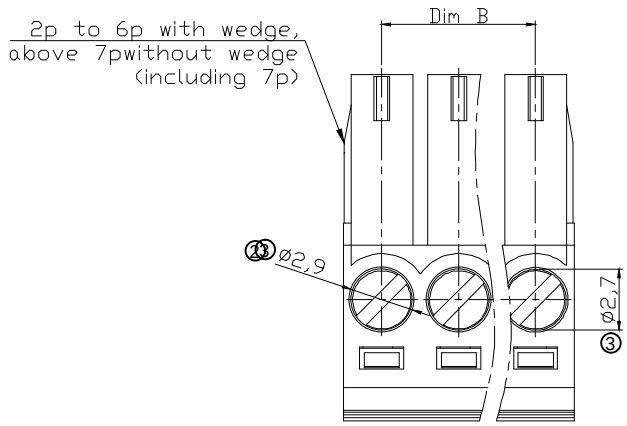

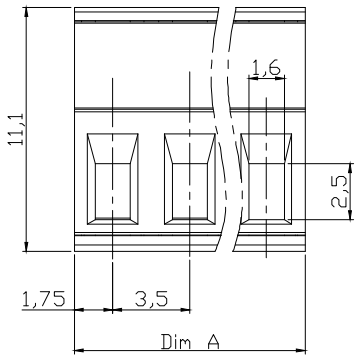

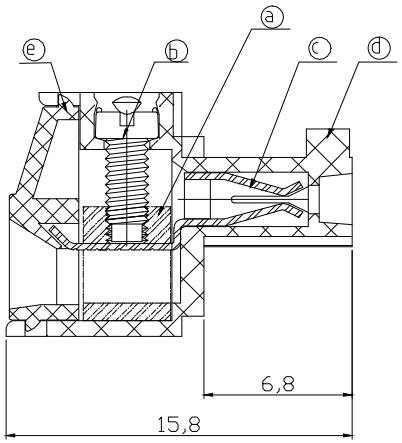

Material

Item ⓐ Clamp: Brass(CuZn) Ni plated
Item ⓑ Terminal screw:Steel Zinc plating"-"slot type
Item ⓒ Female contact: PhBz, Tin plated
Item ⓓ Terminal(housing): PA66 (UL94V-0)
③ Green(RAL356C)
Item ⓔ Terminal cover: PA66 (UL94V-0)
Green(RAL356C)

Electrical cULus

Voltage rating: 300VAC
Current rating: 10A
Wire range: 1.5mm²
Solid wire(AWG): 16-24
Stranded wire(AWG): 6-24
Torque: 2.5kgf.cm
Screw: M2
③ With strip length: 5-6mm
Withstanding Voltage: 1.6KV
Operating temperature: -40°C to +105°C
Safety Approval: c us

④ Packaging: Tray

DIMENSION

A	Nx3.5
B	(N-1)x3.5

N=Number of poles

RoHS compliant
Unit: mm

② File No.: E349947

Scale	Free
TOLERANCE	
X.	±0.50
X.X	±0.30
X.XX	±0.20
DIM	TOL
X.°	±1°
Angle	TOL

Id.	Modification	Date	Name
④	Add packaging type	07.08.2018	Xavier
③	Update	05.01.2018	Tom
②	Update to new drawing and add UL	14.04.2016	Amy
①	Drawn	10.12.2009	Dean

	Date	Name
Drawn	10.12.2009	Dean
Approved	05.01.2018	Tom

ASSMANN wsw components

Customer-No.

ASSMANN WSW-No. A-TB350-TJxxU

Drawing-No. ASS 3822 CO rev04

Replace Sheet

Downloaded from Arrow.com.