Tracker SoM Datasheet

Downloaded from Arrow.com.

Functional description

OVERVIEW

The AssetTracker SoM is a System-on-a-Module (SoM) with:

- LTE Cat 1 (selected countries in the EMEAA region) or LTE Cat M1 (North America) cellular modem
- GNSS (supports GPS and Galileo) with up to 1.8m accuracy and untethered dead-reckoning
- Support for CAN bus and 5V power for CAN devices
- Built-in Inertial Measurement Unit (IMU)
- Castellated module can be reflow soldered to your base board, and is available on an evaluation board or carrier board

Model	Region
T402 / T404	North America
T523 / T524	EMEAA†

†EMEAA: Selected countries in Europe, Middle East, Africa, and Asia, including Australia and New Zealand. See the cellular carrier list for more information.

Downloaded from Arrow.com.

FEATURES

- GNSS u-blox Neo M8U for GNSS with on-board dead-reckoning for up to 1.8m CEP50 GPS accuracy
- Supports GPS L1C/A, Galileo E1B/C
- Support for battery-backup for almanac and ephemeris data
- Quectel BG96-MC modem (T402 / T404)
- LTE Cat M1 module for North America (United States, Canada, and Mexico)
- LTE FDD bands supported: B1, B2， B3, B4， B5, B8, B12， B13, B18, B19, B20, B28
- Quectel EG91-EX modem (T523 / T524)
- LTE Cat 1 module for EMEAA region
- 3GPP E-UTRA Release 13
- Cat 1 bands supported: B1, B3, B7, B8, B20, B28
- 2G and 3G fallback (900, 1800, and 2100 MHz)
- Support for Europe only (T523)
- Support for selected countries in Europe, Middle East, Africa, and Asia, including Australia and New Zealand (T524)
- Nordic Semiconductor nRF52840 SoC
- ARM Cortex-M4F 32-bit processor @ 64MHz
- 1MB flash, 256KB RAM in SoC
- Bluetooth 5: 2 Mbps, 1 Mbps, 500 Kbps, 125 Kbps
- Supports DSP instructions, HW accelerated Floating Point Unit (FPU) and encryption functions
- Up to +8 dBm TX power (down to -20 dBm in 4 dB steps)
- NFC-A tag
- Wi-Fi location: on-board ESP32 offers SSID scanning for using third-party Wi-Fi location services
- PMIC (Power Management ISED) and Fuel Gauge
- On-module additional 8MB SPI flash
- CAN Bus: on-board, integrated CAN Bus controller and transceiver making it ideal for fleet and micromobility
- Boost Converter to power 5V CAN devices from a 3.6V battery
- RTC: External real-time clock with support for an optional separate battery
- Watchdog Timer: integrated hardware WDT
- 10 Mixed signal GPIO (8 x Analog, 10 x Digital, UART, I2C, SPI)
- USB 2.0 full speed (12 Mbps)
- JTAG (SWD) pins
- Support for external RGB status LED
- Support for external Reset and Mode buttons
- On-module MFF2 Particle SIM
- Bluetooth chip antenna on module, switchable to use U.FL connector in software.
- Five on-module U.FL connectors for cellular, GNSS, BLE, Wi-Fi, and alternative GNSS.
- Castellated module designed to be reflow soldered to your own custom base board, or pre-populated on a Particle Evaluation Board or Carrier Board.
- FCC (United States), ISED (Canada), and CE (European Union) certified
- RoHS compliant (lead-free)

MODEL COMPARISON

| | T404 | T402 | T524 | T523 | | :--- | :---: | :---: | :---: | :---: | :---: | | Region | NorAm | NorAm | EMEAA | Europe | | EtherSIM | ✓ | | ✓ | | | Supply Secure | ✓ | | ✓ | | | Lifecycle | GA | Deprecated | GA | Deprecated |

- EtherSIM devices generally have a larger number of carriers and more may be added in the future
- NorAm: North America (United States, Canada, and Mexico)

Downloaded from Arrow.com.

- EMEAA: Europe, Middle East, Africa, and Asia (not all countries supported)
- See the Carrier list for specific carrier and country compatibility
- See the Supply secure FAQ for more information
- See Lifestyle stages for more information

DEVICE OS SUPPORT

It is recommended that you use the latest version in the 4.x LTS release line with the Tracker SoM.

Tracker Edge v18 requires a minimum of Device OS 3.3.0. Device OS 3.x is a developer preview release and has reached its end-of-support date. We recommend that all Tracker fleets upgrade to Device OS 4.x.

For information on upgrading Device OS, see Version information. For the latest version shipped from the factory, see Manufacturing firmware versions page. See also Long Term Support (LTS) releases.

Downloaded from Arrow.com.

Interfaces

BLOCK DIAGRAM

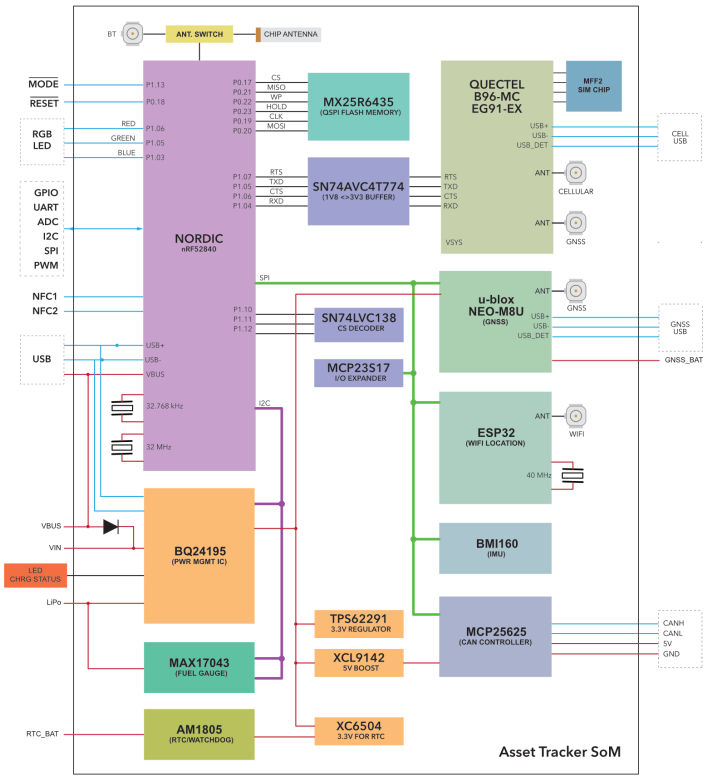

POWER

The Tracker SoM can be powered via the VIN (3.9V-17VDC) pin, over USB, or a LiPo battery.

VIN

The input voltage range on VIN pin is 3.9VDC to 17VDC. When powering from the VIN pin alone, make sure that the power supply is rated at 10W (for example 5 VDC at 2 Amp). If the power source is unable to meet this requirement, you'll need connect the LiPo battery as well. An additional bulk capacitance of 470uF to 1000uF should be added to the VIN input when the LiPo Battery is disconnected. The amount of capacitance required will depend on the ability of the power supply to deliver peak currents to the cellular modem.

LiPo

This pin serves two purposes. You can use this pin to connect a LiPo battery (either directly or using a JST connector), or it can be used to connect an external DC power source (and this is where one needs to take extra precautions). When powering it from an external regulated DC source, the recommended input voltage range on this pin is between 3.6V to 4.4VDC. Make sure that the supply can handle currents of at least 3Amp. This is the most efficient way of powering the module since the PMIC bypasses the regulator and supplies power to the module via an internal FET leading to lower quiescent current.

When powered from a LiPo battery alone, the power management IC switches off the internal regulator and supplies power to the system directly from the battery. This reduces the conduction losses and maximizes battery run time. The battery provided with the module is a Lithium-Ion Polymer battery rated at 3.7VDC 1,800mAh. You can substitute this battery with another 3.7V LiPo with higher current rating. Remember to never exceed this voltage rating and always pay attention to the polarity of the connector. A LiPo battery with internal protection circuits is recommended.

Downloaded from Arrow.com.

Typical current consumption is around 180mA and up to 1.8A transients at 5VDC. In deep sleep mode, the quiescent current is 130uA [this value may change] (powered from the battery alone).

The MAX17043 fuel gauge is only compatible with single cell lithium-ion batteries. The state-of-charge (SoC) values will not be accurate with other battery chemistries.

VBUS

VBUS is connected to the USB detect pin of nRF52840 to enables the USB interface. The recommended input voltage range is between 4.35V to 5.5V DC. It is also connected to the bq24195 PMIC to allow for DPDM, detection of the power capacity of the USB port.

3V3 Pin

This pin is the output of the on-board 3.3V switching regulator that powers the microcontroller and the peripherals. This pin can be used as a 3.3V power source with a max load of 800mA. Unlike the Photon, this pin *CANNOT* be used as an input to power the module.

RTC_BAT

This is the supply to the real-time clock battery backup. 1.4 to 3.6V.

Voltage	Typical Current	Peak Current	Unit
3.0V	56	330	nA
1.8V	52	290	nA

If the RTC battery is not used, connect RTC_BAT to ground.

GNSS_BAT

This is the supply for maintaining the u-blox GNSS ephemeris and almanac data when removing power. This can use the same battery as RTC_BAT, can be a super-capacitor, or can be omitted. 1.5 to 3.6V. Typical current is 15 uA.

If you are not powering GNSS_BAT with a battery or super-capacitor, connect GNSS_BAT to 3V3.

- Saving the ephemeris and almanac data can improve fix/lock time.
- It won't make a difference on completely cold boot, where is no previously saved data.
- It does not make a difference if the GNSS is constantly powered or is using a software power save mode.

Downloaded from Arrow.com.

PMID

This pin is connected to the PMID pin of the bq24195 PMIC. You should leave this pin unconnected.

ANTENNAS

There are a number of U.FL antenna connectors on the Tracker SoM:

Label	Purpose
GNSS	u-blox GNSS antenna (GPS)
CELL	Quectel cellular modem antenna
WIFI	Wi-Fi antenna for Wi-Fi geolocation (optional)[1]
BLE	External Bluetooth (optional)[2]
GNSS/DIV	Quectel GNSS antenna (optional)[1]
DIV	LTE cellular receive diversity antenna[3]

[1]Not supported at this time.

[2]There is a BLE chip antenna on the module, the external BLE antenna is optional.

[3]DIV is the connector for the LTE cellular receive diversity antenna (T523 only). A second cellular antenna can be connected to this connector to improve performance when the device will be moving at high speeds. It is only used for LTE Cat 1 connections and is not supported when in 2G or 3G mode. This antenna is not necessary in most cases and is not included in evaluation kits. The T404/T402 do not have this connector as receive diversity is not supported in LTE Cat M1 mode.

There is no U.FL connector for NFC. If you wish to use the NFC tag feature, you'll need to add an antenna or antenna connector on your base board.

- The antenna placement needs to follow some basic rules, as any antenna is sensitive to its environment. Mount the antenna at least 10mm from metal components or surfaces, ideally 20mm for best radiation efficiency, and try to maintain a minimum of three directions free from obstructions to be able to operate effectively.
- Needs tuning with actual product enclosure and all components.
- For the BLE antenna, it is recommended to use a 2.4 GHz single-frequency antenna and not a 2.4 GHz + 5 GHz antenna, so as to avoid large gain at the frequency twice of 2.4 GHz which can cause the second harmonic radiation of 2.4 GHz to exceed standards.

Downloaded from Arrow.com.

GNSS Antenna

As the GNSS system is receive-only (no transmitter), you can use any GNSS compatible antenna without affecting the certification. Different GNSS systems use different frequencies. Many antennas are tuned to the United States GPS system, however you can also get multi-GNSS antennas that are compatible with other systems. All of these systems offer coverage world-wide.

System	Owner
GPS	United States
GLOSNASS	Russia
BeiDou	China
Galileo	European Space Agency

Cellular antenna

The Tracker SoM has been certified with the following antenna:

Antenna	SKU	Details	Links
Particle Cellular Flex Antenna 2G/3G/LTE 4.7dBi, [x1]	ANTCW2EA	Tracker, B-Series, E-Series	Datasheet | Retail Store

Band	Frequency (MHz)	Peak Gain	Average Gain
700/850/900	698-960	1.42 dBi	-2.80 dB
1700/1800/1900	1710-1990	3.77 dBi	-1.90 dB
2100	1755-2170	4.62 dBi	-2.65 dB
2400	2400-2500	4.71 dBi	-2.10 dB
2600	2500-2690	4.66 dBi	-2.20 dB

Measurement	Value
Maximum power	5W
Impedance	50Ω
Size	97.0 x 21.0 x 0.2 mm

Particle devices are certified for use only with the designated antenna specified above. The use of alternative antennas with our modules could necessitate a recertification process. To fully understand the potential consequences of using a non-certified antenna, Particle strongly advises seeking consultation with a qualified RF expert.

Downloaded from Arrow.com.

Wi-Fi Antenna

The Tracker SoM has been certified with the following Wi-Fi antenna. Note: The same external antenna model is used for Wi-Fi and BLE.

Antenna	SKU	Links
Particle Wi-Fi Antenna 2.4GHz, [x1]	ANT-FLXV2	Datasheet | Retail Store
Particle Wi-Fi Antenna 2.4GHz, [x50]	ANT-FLXV2-50	Datasheet

Measurement	Value
Peak gain	2.0 dBi
Frequency	2400 - 2500 MHz
Impedance	50Ω
Size	45.1 x 7.4 x 1.0mm

BLE Antenna

The Tracker SoM includes a built-in chip antenna for BLE with a peak gain of 0 dBi. It can also be used with the following external antenna, which is the same model as the Wi-Fi antenna, above.

Antenna	SKU	Links
Particle Wi-Fi Antenna 2.4GHz, [x1]	ANT-FLXV2	Datasheet | Retail Store
Particle Wi-Fi Antenna 2.4GHz, [x50]	ANT-FLXV2-50	Datasheet

Measurement	Value
Peak gain	2.0 dBi
Frequency	2400 - 2500 MHz
Impedance	50Ω
Size	45.1 x 7.4 x 1.0mm

Downloaded from Arrow.com.

PERIPHERALS AND GPIO

There are 10 exposed GPIO lines labeled A0-A7, TX, and RX. These multi-function pins can be configured for use as GPIO or other interfaces like SPI and I2C.

Shared Peripherals	Qty	Input(I) / Output(O)
Digital	10 (max)	I/O
Analog (ADC)	8 (max)	I
UART	1	I/O
SPI	1	I/O
I2C	1	I/O
PWM	10 (max)[1]	O

Peripheral Type	Qty	Input(I) / Output(O)
USB	1	I/O
NFC Tag	1	O
CAN Bus	1	I/O

[1]PWM is divided into three PWM groups. Each group must share the same frequency, but can have different periods.

Note: All GPIO are only rated at 3.3VDC max. CAN bus has a higher voltage rating.

JTAG (SWD)

The AssetTracker SoM exposes the nRF52 SWD interface on the following pins. The Evaluation Board connects these pins to the 2x5 connector used on the Argon and Boron to easily connect the Particle Debugger.

#	Pin	Function	Connected To	Description
22	SWDIO	JTAG	nRF52	nRF52 MCU SWDIO
23	SWDCLK	JTAG	nRF52	nRF52 MCU SWDCLK
24	SWO	JTAG	nRF52	nRF52 MCU SWO

This interface can be used to debug your code or reprogram your bootloader, device OS, or the user firmware.

Downloaded from Arrow.com.

Memory map

NRF52840 FLASH LAYOUT OVERVIEW

- Bootloader (48KB, @0xF4000)
- User Application
  - 256KB @ 0xB4000 (Device OS 3.1 and later)
  - 128KB @ 0xD4000 (Device OS 3.0 and earlier)
- System (656KB, @0x30000)
- SoftDevice (192KB)

EXTERNAL SPI FLASH LAYOUT OVERVIEW (DFU OFFSET: 0X80000000)

- OTA (1500KB, @0x00689000)
- Reserved (420KB, @0x00620000)
- FAC (128KB, @0x00600000)
- Reserved (2MB @0x00400000)
- LittleFS (4MB, @0x00000000)

Downloaded from Arrow.com.

Pins and connectors

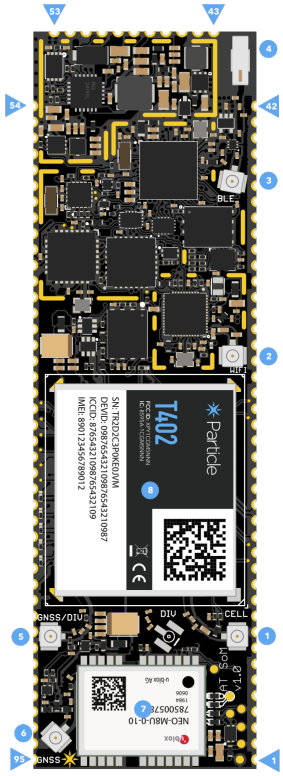

Circular labels are as follows:

Label	Purpose
1	Quectel cellular modem antenna
2	Wi-Fi antenna for Wi-Fi geolocation (optional)
3	External Bluetooth (optional)
4	Built-in Bluetooth chip antenna
5	Quectel GNSS antenna (optional)
6	u-blox GNSS antenna (GPS)
7	u-blox Neo M8 GNSS (GPS)
8	Quectel cellular modem

Downloaded from Arrow.com.

SOM PIN DESCRIPTION

#	Pin	Function	Connected To	Description
				Right Side
1	GND	POWER		Ground
2	GNSS_BAT	POWER IN	GNSS	Battery backup for GNSS
3	GNSS_RESET	IO	GNSS & IOEX	GNSS hardware reset. Can be controlled by this pin or software.
4	GNSS_VBUS	USB PWR	GNSS	GNSS USB power. Optional.
5	GNSS_P	USB D+	GNSS	GNSS USB interface D+. Optional.
6	GNSS_N	USB D-	GNSS	GNSS USB interface D-. Optional.
7	GNSS_PULSE	OUT	GNSS	GNSS time pulse output. Can be used for a GNSS fix LED.[2]
8	GND	POWER		Ground
9	NC			Leave unconnected.
10	GND	POWER		Ground
11	WIFI_EN	IO	WIFI & IOEX	ESP32 enable. Can be controlled by this pin or software.
12	WIFI_BOOT	IO	WIFI & IOEX	ESP32 boot mode. Can be controlled by this pin or software.
13	WIFI_TXD	OUT	WIFI	ESP32 serial TX
14	WIFI_RXD	IN	WIFI	ESP32 serial TX
15	CELL_VBUS	USB PWR	CELL	Cellular modem USB power. Optional.
16	CELL_D+	USB D+	CELL	Cellular modem USB interface D+. Optional.
17	CELL-D-	USB D-	CELL	Cellular modem USB interface D-. Optional.
18	NC SOM18			Leave unconnected.
19	NC SOM19			Leave unconnected.
20	NC SOM20			Leave unconnected.
21	NC SOM21			Leave unconnected.
22	SWDIO	JTAG	nRF52	nRF52 MCU SWDIO
23	SWDCLK	JTAG	nRF52	nRF52 MCU SWDCLK
24	SWO	JTAG	nRF52	nRF52 MCU SWO
25	GND	POWER		Ground
26	NFC2	NFC	nRF52	nRF52 NFC antenna. Supports NFC tag mode only. Optional.
27	NFC1	NFC	nRF52	nRF52 NFC antenna. Supports NFC tag mode only. Optional.
28	RGB_BLUE	RGB LED	nRF52	Common anode RGB status LED, blue. Optional.
29	RGB_GREEN	RGB LED	nRF52	Common anode RGB status LED, green. Optional.
30	RGB_RED	RGB LED	nRF52	Common anode RGB status LED, red. Optional.
31	GND	POWER		Ground
32	MODE	INPUT	nRF52	External MODE button input, active low. Optional.
33	RESET	INPUT	nRF52	External RESET button input, active low. Optional.
34	NC SOM34			Leave unconnected.
35	NC SOM35			Leave unconnected.
36	NC SOM36			Leave unconnected.
37	NC SOM37			Leave unconnected.
38	A7	IO	nRF52	A7, D7, SS, WKP
39	A6	IO	nRF52	A6, D6, SPI SCK
40	A5	IO	nRF52	A5, D5, SPI MISO

Downloaded from Arrow.com.

41	A4	IO	nRF52	A4, D4, SPI MOSI
42	GND	POWER		Ground
				Top Side
43	GND	POWER		Ground
44	NC SOM44			Leave unconnected.
45	3V3	POWER OUT	TPS62291	3.3V power output. 1000 mA maximum include nRF52 and other peripheral use.
46	TS	IN	PMIC	Battery temperature sensor
47	PMID	POWER OUT	PMIC	PMIC power output in OTG mode.
48	GND	POWER		Ground
49	VIN	POWER IN	PMIC	Power input 3.9VDC to 17VDC.
50	STAT	OUT	PMIC	PMIC charge status. Can be connected to an LED. Active low. Optional.
51	VBUS	POWER IN	PMIC & nRF52	nRF52 USB power input. Can be used as a power supply instead of VIN.
52	GND	POWER		Ground
53	LI+	POWER	PMIC	Connect to Li-Po battery. Can power the device or be recharged by VIN or VBUS.
				Left Side
54	GND	POWER		Ground
55	A0	IO	nRF52	A0, D0, Wire SDA, Thermistor[1]
56	A1	IO	nRF52	A1, D1, Wire SCL, User button[1]
57	A2	IO	nRF52	A2, D2, Serial1 CTS, GNSS lock indicator[1]
58	A3	IO	nRF52	A3, D3, Serial1 RTS, M8 GPIO[1]
59	NC SOM59			Leave unconnected.
60	NC SOM60			Leave unconnected.
61	NC SOM61			Leave unconnected.
62	NC SOM62			Leave unconnected.
63	AGND	POWER	nRF52	nRF52 analog ground. Can connect to regular GND.
64	CAN_N	CAN	CAN	CAN Data-
65	CAN_P	CAN	CAN	CAN Data+
66	CAN_5V		XCL9142F40	5V power out, 370 mA maximum. Can be controlled by software.
67	GND	POWER		Ground
68	MCU-D-	USB D-	nRF52	MCU USB interface D-. Optional.
69	MCU_D+	USB D+	nRF52	MCU USB interface D+. Optional.
70	GND	POWER		Ground
71	MCU_RX	IO	nRF52	Serial RX, GPIO D9, Wire3 SDA
72	MCU_TX	IO	nRF52	Serial TX, GPIO D8, Wire3 SCL
73	RTC_BAT	POWER	AM18X5	RTC/Watchdog battery +. Connect to GND if not using.
74	RTC_BTN	IN	AM18X5	RTC EXTI. Can use as a wake button.
75	GND	POWER		Ground
76	NC SOM76			Leave unconnected.
77	NC SOM77			Leave unconnected.
78	NC SOM78			Leave unconnected.
79	NC SOM79			Leave unconnected.

Downloaded from Arrow.com.

80	NC SOM80			Leave unconnected.
81	NC SOM81			Leave unconnected.
82	NC SOM82			Leave unconnected.
83	CELL_GPS_RX	IN	CELL	Cellular modem GPS serial RX data.
84	CELL_GPS_TX	OUT	CELL	Cellular modem GPS serial TX data.
85	CELL_RI	OUT	CELL	Cellular modem ring indicator output.
86	GND	POWER		Ground
87	CELL_GPS_RF	RF	CELL	Cellular modem GPS antenna. Optional.
88	GND	POWER		Ground
89	GND	POWER		Ground
90	GNSS_BOOT		GNSS	u-blox GNSS boot mode
91	GNSS_ANT_PWR		GNSS	u-blox GNSS antenna power
92	GNSS_LNA_EN		GNSS	u-blox GNSS LNA enable or antenna switch
93	GND	POWER		Ground
94	GNSS_RF		GNSS	GNSS antenna.
95	GND	POWER		Ground

Note: All GPIO, ADC, and peripherals such as I2C, Serial, and SPI are 3.3V maximum and are **not** 5V tolerant.

Pin numbers match the triangular numbers in the graphic above.

[1]Pin usage on the Tracker One.

[2]The GNSS_PULSE pin can be used for a hardware GPS lock indicator, however the Tracker One controls the GNSS Lock indicator in software and connects the LED to pin A2.

NRF52 PIN ASSIGNMENTS

SoM Pin	GPIO	Analog	Other	PWM	nRF Pin
55	D0	A0	Wire SDA[1]	Group 0	P0.03
56	D1	A1	Wire SCL[1]	Group 0	P0.02
57	D2	A2	Serial1 CTS	Group 0	P0.28
58	D3	A3	Serial1 RTS	Group 0	P0.30
41	D4	A4	SPI MOSI	Group 1	P0.31
40	D5	A5	SPI MISO	Group 1	P0.29
39	D6	A6	SPI SCK	Group 1	P0.04
38	D7	A7	SPI SS, WKP	Group 1	P0.05
72	D8		Serial1 TX, Wire3 SCL	Group 2	P0.06
71	D9		Serial1 RX, Wire3 SDA	Group 2	P0.08

[1]Pull-up resistors are not included. When using as an I2C port, external pull-up resistors are required.

Downloaded from Arrow.com.

System peripheral GPIO

Name	Description	Location
BTN	MODE Button	P1.13
PMIC_INT	PMIC Interrupt	P0.26
LOW_BAT_UC	Fuel Gauge Interrupt	IOEX 0.0
RTC_INT	Real-time clock Interrupt	P0.27
BGRST	Cellular module reset	P0.07
BGPWR	Cellular module power	P0.08
BGVINT	Cellular power on detect	P1.14
BGDTR	Cellular module DTR	IOEX 1.5
CAN_INT	CAN interrupt	P1.09
CAN_RST	CAN reset	IOEX 1.6
CAN_PWR	5V boost converter enable	IOEX 1.7
CAN_STBY	CAN standby mode	IOEX 0.2
CAN_RTS0	CAB RTS0	IOEX 1.4
CAN_RTS1	CAN RTS1	IOEX 1.2
CAN_RTS2	CAN RTS2	IOEX 1.3
SEN_INT	IMU interrupt	P1.07
ANT_SW1	BLE antenna switch	P1.15
GPS_PWR	u-blox GNSS power	IOEX 0.6
GPS_INT	u-blox GNSS interrupt	IOEX 0.7
GPS_BOOT	u-blox GNSS boot mode	IOEX 1.0
GPS_RST	u-blox GNSS reset	IOEX 1.1
WIFI_EN	ESP32 enable	IOEX 0.3
WIFI_INT	ESP32 interrupt	IOEX 0.4
WIFI_BOOT	ESP32 boot mode	IOEX 0.5

STATUS LED

The Tracker SoM does not have an on-module RGB system status LED. We have provided its individual control pins for you to connect an LED of your liking. This will allow greater flexibility in the end design of your products.

Device OS assumes a common anode RGB LED. One common LED that meets the requirements is the Cree CLMVC-FKA-CL1D1L71BB7C3C3 which is inexpensive and easily procured. You need to add three current limiting resistors. With this LED, we typically use 1K ohm current limiting resistors. These are much larger than necessary. They make the LED less blinding but still provide sufficient current to light the LEDs. If you want maximum brightness you should use the calculated values - 33 ohm on red, and 66 ohm on green and blue.

A detailed explanation of different color codes of the RGB system LED can be found here.

Downloaded from Arrow.com.

Technical specifications

ABSOLUTE MAXIMUM RATINGS

Parameter	Symbol	Min	Typ	Max	Unit
Supply					
Supply Input Voltage	VIN	-2.0		+22.0	V
Supply Input Current	$I_{IN-MAX-L}$			1.5	A
VBUS USB supply voltage	VUSB	-0.3		+5.8	V
Supply Output Voltage	V_{IN}		+4.8		V
Supply Output Voltage	V_{3V3}		+3.3		V
Supply Output Current	$I_{3V3-MAX-L}$			800	mA
LiPo Battery Voltage	V_{LiPo}	-0.5		+6.0	V
CAN Supply Voltage		5		V	
CAN Supply Current			370	mA	
I/O pin voltage					
VI/O	IO	-0.3		+3.6	V
NFC antenna pin current					
$I_{NFC1/2}$	NFC1/NFC2			80	mA
Radio					
BT RF input level (52840)				10	dBm
Environmental					
Storage temperature		-40		+85	°C
ESD Susceptibility HBM (Human Body Mode)	V_{ESD}			2	kV

Stresses beyond those listed under absolute maximum ratings may cause permanent damage to the device. These are stress ratings only, and functional operation of the device at these or any other conditions beyond those indicated under recommended operating conditions is not implied. Exposure to absolute-maximum-rated conditions for extended periods may affect device reliability.

Downloaded from Arrow.com.

RECOMMENDED OPERATING CONDITIONS

Parameter	Symbol	Min	Typ	Max	Unit
Supply voltages					
Supply Input Voltage	VIN	3.9		17.0	V
VBUS USB supply voltage	VUSB	4.35	5.0	5.5	V
LiPo Battery Voltage	V_{LiPo}	3.6		4.3	V
Environmental					
Normal operating temperature[1]		-20	+25	+75	°C
Extended operating temperature[2]		-40		+85	°C
Humidity Range Non condensing, relative humidity				95	%

Notes:

[1] Normal operating temperature range (fully functional and meet 3GPP specifications).

[2] Extended operating temperature range (RF performance may be affected outside normal operating range, though module is fully functional)

Downloaded from Arrow.com.

POWER CONSUMPTION (T404/T402)

Parameter	Symbol	Min	Typ	Peak	Unit
Operating Current (uC on, peripherals and radio disabled)	I_{idle}	3.35	3.38	4.39	mA
Operating Current (uC on, cellular on but not connected)	I_{cell_idle}		21.3	277	mA
Operating Current (uC on, cellular connecting to tower)	$I_{cell_conn_twr}$	16.8	56.7	329	mA
Operating Current (uC on, cellular connecting to cloud)	$I_{cell_conn_cloud}$	19.1	53.3	292	mA
Operating Current (uC on, cellular connected but idle)	$I_{cell_cloud_idle}$	19.2	21.2	97.1	mA
Operating Current (uC on, cellular connected and transmitting)	$I_{cell_cloud_tx}$	19.5	63.6	280	mA
STOP mode sleep, GPIO wake-up	I_{stop_gpio}	556	806	1170	uA
STOP mode sleep, analog wake-up	I_{stop_analog}	588	831	1230	uA
STOP mode sleep, RTC wake-up	I_{stop_intrtc}	593	835	1240	uA
STOP mode sleep, BLE wake-up, advertising	$I_{stop_ble_adv}$		858	2330	uA
STOP mode sleep, BLE wake-up, connected	$I_{stop_ble_conn}$		875	1600	uA
STOP mode sleep, serial wake-up	I_{stop_usart}	577	798	1210	uA
STOP mode sleep, cellular wake-up	I_{stop_cell}	7.66	17.2	90.1	mA
STOP mode sleep, IMU wake-up	I_{stop_imu}	548	834	1250	uA
STOP mode sleep, CAN wake-up	I_{stop_can}	605	817	1210	uA
STOP mode sleep, GPS wake-up	I_{stop_gps}	23.7	31.1	46.3	mA
ULP mode sleep, GPIO wake-up	I_{ulp_gpio}		114	479	uA
ULP mode sleep, analog wake-up	I_{ulp_analog}		117	508	uA
ULP mode sleep, RTC wake-up	I_{ulp_intrtc}		114	509	uA
ULP mode sleep, BLE wake-up, advertising	$I_{ulp_ble_adv}$		186	2200	uA
ULP mode sleep, BLE wake-up, connected	$I_{ulp_ble_conn}$		203	1070	uA
ULP mode sleep, serial wake-up	I_{ulp_usart}	287	530	934	uA
ULP mode sleep, cellular wake-up	I_{ulp_cell}	3.06	16.9	83.4	mA
ULP mode sleep, IMU wake-up	I_{imu_imu}		175	616	uA
ULP mode sleep, CAN wake-up	I_{can_can}		142	528	uA
ULP mode sleep, GPS wake-up	I_{ulp_gps}	23.6	30.9	45.7	mA
HIBERNATE mode sleep, GPIO wake-up	I_{hib_gpio}		103	503	uA
HIBERNATE mode sleep, analog wake-up	I_{hib_analog}		100	493	uA
HIBERNATE mode sleep, external RTC wake-up	I_{hib_extrtc}		94.3	590	uA
HIBERNATE mode sleep, IMU wake-up	I_{hib_imu}		151	590	uA
HIBERNATE mode sleep, CAN wake-up	I_{hib_can}		121	477	uA

[1]The min, and particularly peak, values may consist of very short transients. The typical (typ) values are the best indicator of overall power consumption over time. The peak values indicate the absolute minimum capacity of the power supply necessary, not overall consumption.

Current measurements taken at 3.6V via the battery input. For more information about measuring power usage, see power measurement.

Downloaded from Arrow.com.

POWER CONSUMPTION (T524/T523)

Parameter	Symbol	Min	Typ	Peak	Unit
Operating Current (uC on, peripherals and radio disabled)	I_{idle}	3.22	3.24	3.26	mA
Operating Current (uC on, cellular on but not connected)	I_{cell_idle}	18.9	22.0	136	mA
Operating Current (uC on, cellular connecting to tower)	$I_{cell_conn_twr}$	35.5	106	726	mA
Operating Current (uC on, cellular connecting to cloud)	$I_{cell_conn_cloud}$	38.0	137	553	mA
Operating Current (uC on, cellular connected but idle)	$I_{cell_cloud_idle}$	19.2	21.2	97.1	mA
Operating Current (uC on, cellular connected and transmitting)	$I_{cell_cloud_tx}$	117	145	787	mA
STOP mode sleep, GPIO wake-up	I_{stop_gpio}	625	872	1270	uA
STOP mode sleep, analog wake-up	I_{stop_analog}	655	853	1210	uA
STOP mode sleep, RTC wake-up	I_{stop_intrtc}	632	873	1260	uA
STOP mode sleep, BLE wake-up, advertising	$I_{stop_ble_adv}$		919	2700	uA
STOP mode sleep, BLE wake-up, connected	$I_{stop_ble_conn}$	421	901	1680	uA
STOP mode sleep, serial wake-up	I_{stop_usart}	613	840	1240	uA
STOP mode sleep, cellular wake-up	I_{stop_cell}	19.2	21.5	149	mA
STOP mode sleep, IMU wake-up	I_{stop_imu}	584	858	1250	uA
STOP mode sleep, CAN wake-up	I_{stop_can}	622	869	1280	uA
STOP mode sleep, GPS wake-up	I_{stop_gps}	23.8	30.8	44.7	mA
ULP mode sleep, GPIO wake-up	I_{ulp_gpio}	130	139	540	uA
ULP mode sleep, analog wake-up	I_{ulp_analog}	132	140	542	uA
ULP mode sleep, RTC wake-up	I_{ulp_intrtc}	131	139	531	uA
ULP mode sleep, BLE wake-up, advertising	$I_{ulp_ble_adv}$	132	214	2240	uA
ULP mode sleep, BLE wake-up, connected	$I_{ulp_ble_conn}$		230	1110	uA
ULP mode sleep, serial wake-up	I_{ulp_usart}	366	564	933	uA
ULP mode sleep, cellular wake-up	I_{ulp_cell}	18.9	21.7	210	mA
ULP mode sleep, IMU wake-up	I_{imu_imu}		172	580	uA
ULP mode sleep, CAN wake-up	I_{can_can}		162	513	uA
ULP mode sleep, GPS wake-up	I_{ulp_gps}	23.1	30.2	44.6	mA
HIBERNATE mode sleep, GPIO wake-up	I_{hib_gpio}		111	474	uA
HIBERNATE mode sleep, analog wake-up	I_{hib_analog}		114	521	uA
HIBERNATE mode sleep, external RTC wake-up	I_{hib_extrtc}		111	478	uA
HIBERNATE mode sleep, IMU wake-up	I_{hib_imu}		144	580	uA
HIBERNATE mode sleep, CAN wake-up	I_{hib_can}	8.76	133	386	uA

[1]The min, and particularly peak, values may consist of very short transients. The typical (typ) values are the best indicator of overall power consumption over time. The peak values indicate the absolute minimum capacity of the power supply necessary, not overall consumption.

Current measurements taken at 3.6V via the battery input. For more information about measuring power usage, see power measurement.

Downloaded from Arrow.com.

GNSS SPECIFICATIONS

- u-blox NEO-M8U untethered dead reckoning module including 3D inertial sensors
- SPI Interface

- Supports GPS L1C/A, Galileo E1B/C

Parameter	Specification
Dynamics operational limit[1]	≤ 4g
Altitude operational limit[1]	50000 m
Velocity operational limit[1]	500 m/s
Velocity accuracy[2]	0.5 m/s
Heading accuracy[2]	1 degree
Max navigation update rate[3]	30 Hz
Max navigation latency[3]	< 10 ms

Parameter		GPS	Galileo
Time-To-First Fix[5]	Cold start	30s	57s
	Hot start	1.5s	1.5s
	Aided start[6]	3s	7s
Sensitivity [7][8]	Tracking & Navigation	-160 dBm	-154 dBm
	Reacquisiton	-159 dBm	-152 dBm
	Cold Start	-147 dBm	-133 dBm
	Hot Start	-156 dBm	-151 dBm
Horizontal positioning accuracy	Autonomous [9]	TBC[10]	
	With SBAS[11]	1.5m	-
Altitude accuracy	With SBAS[12]	3.0m	-

[1] Configured for Airborne < 4g platform

[2] 50% at 30 m/s

[3] High navigation rate mode

[5] All satellites at -130 dBm, except Galileo at -127 dBm

[6] Dependent on aiding data connection speed and latency

[7] Demonstrated with a good external LNA

[8] Configured min. CNO of 6 dB/Hz, limited by FW with min. CNO of 20 dB/Hz for best performance

[9] CEP, 50%, 24 hours static, -130 dBm, > 6 SVs

[10] To be confirmed when Galileo reaches full operational capability

[11] CEP, 50%, 24 hours static, -130 dBm, > 6 SVs

[12] CEP, 50%, 24 hours static, -130 dBm, > 6 SVs

GNSS GPIO:

Downloaded from Arrow.com.

Name	Description	Location
GPS_PWR	u-blox GNSS power	IOEX 0.6
GPS_INT	u-blox GNSS interrupt	IOEX 0.7
GPS_BOOT	u-blox GNSS boot mode	IOEX 1.0
GPS_RST	u-blox GNSS reset	IOEX 1.1
GPS_CS	CAN SPI Chip Select	CS Decoder 4

Downloaded from Arrow.com.

CAN SPECIFICATIONS

- Microchip MCP25625 CAN Controller with Integrated Transceiver
- SPI Interface
- Implements CAN2.0B (ISO11898-1)
- Implements ISO-11898-2 and ISO-11898-5 standard physical layer requirements
- Up to 1 Mb/sec operation
- 3 transmit buffers with prioritization and abort features
- 2 receive buffers
- 6 filters and 2 masks with optional filtering on the first 2 data bytes
- CAN bus pins are disconnected when device is unpowered
- High-ESD protection on CANH and CANL, meets IEC61000-4-2 up to ±8 kV
- Very low standby current, 10 uA, typical
- 5V step-up converter (XC9142F50CER), 370 mA maximum
- CAN terminator resistor is not included

CAN GPIO:

Name	Description	Location
CAN_INT	CAN interrupt	P1.09
CAN_RST	CAN reset (LOW = reset for 100 milliseconds)	IOEX 1.6
CAN_PWR	5V boost converter enable (HIGH = on)	IOEX 1.7
CAN_STBY	CAN standby mode (HIGH = standby)	IOEX 0.2
CAN_RTS0	CAB RTS0	IOEX 1.4
CAN_RTS1	CAN RTS1	IOEX 1.2
CAN_RTS2	CAN RTS2	IOEX 1.3
CAN_CS	CAN SPI Chip Select	CS Decoder 7

CANH, CANL Absolute Maximum Ratings:

Parameter	Maximum
DC Voltage at CANH, CANL	-58V to +58V
Transient Voltage on CANH, CANL (ISO-7637)	-150V to +100V
ESD Protection on CANH and CANL Pins (IEC 61000-4-2)	±8 kV
ESD Protection on CANH and CANL Pins (IEC 801; Human Body Model)	±8 kV

CAN Transceiver Characteristics

Parameter	Symbol	Min	Typ	Max	Unit	Conditions
Supply Input Voltage	V_{DDA}		5.0		V	
Supply Current	I_{DD}		5	10	mA	Recessive; $V_{TXD} = V_{DDA}$
			45	70	mA	Dominant; V_{TXD} = 0V
Standby Current	I_{DDS}		5	15	µA	Includes I_{IO}
CANH, CANL Recessive Bus Output Voltage	$V_{O(R)}$	2.0	2.5	3.0	V	$V_{TXD} = V_{DDA}$
CANH, CANL Bus Output Voltage in Standby	$V_{O(S)}$	-0.1	0.0	+0.1	V	STBY = $V_{TXD} = V_{DDA}$; No load
Recessive Output Current	$I_{O(R)}$	-5		+5	mA	-24V < V_{CAN} < +24V
CANH: Dominant Output Voltage	$V_{O(D)}$	2.75	3.5	4.5	V	T_{XD} =0; R_L = 50 to 65Ω
CANL: Dominant Output Voltage	$V_{O(D)}$	0.5	1.5	2.25	V	R_L = 50 to 65Ω
Dominant: Differential Output Voltage	$V_{O(DIFF)}$	1.5	2.0	3.0	V	$T_{XD} = V_{SS}$; R_L =50 to 65Ω

Downloaded from Arrow.com.

Recessive: Differential Output Voltage		-120	0	12	mV	$T_{XD} = V_{DDA}$; R_L =50 to 65Ω
		-500	0	50	mV	$T_{XD} = V_{DDA}$; No load
CANH: Short-Circuit Output Current	$I_{O(SC)}$	-120	85		mA	$V_{TXD} = V_{SS}$; V_{CANH} = 0V; CANL: floating
CANL: Short-Circuit Output Current			75	120	mA	$V_{TXD} = V_{SS}$; V_{CANL} = 18V; CANH: floating
Recessive Differential Input Voltage	$V_{DIFF(R)}$ (I)	-1.0		+0.5	V	Normal mode; -12V < $V_{(CANH, CANL)}$ < +12V
		-1.0		+0.4	V	Standby mode; -12V < $V_{(CANH, CANL)}$ < +12V
Dominant Differential Input Voltage	$V_{DIFF(D)}$ (I)	0.9		5.0	V	Normal mode; -12V < $V_{(CANH, CANL)}$ < +12V
		1.0		5.0	V	Standby mode; -12V < $V_{(CANH, CANL)}$ < +12V

Downloaded from Arrow.com.

OTHER COMPONENTS

IMU (inertial measurement unit)

- Bosch Sensortec BMI160
- SPI Interface connected to SPI1 (MISO1, MOSI1, SCK1)
- Chip Select: SEN_CS (CS Decoder 2)
- Can wake nRF52 MCU on movement (SEN_INT1)
- 16 bit digital, triaxial accelerometer and triaxial gyroscope
- Very low power consumption: typically 925 µA with accelerometer and gyroscope in full operation
- Allocatable FIFO buffer of 1024 bytes (capable of handling external sensor data)
- Hardware sensor time-stamps for accurate sensor data fusion
- Integrated interrupts for enhanced autonomous motion detection

PMIC

- Texas Instruments bq24195
- I2C interface (Wire1 address 0x6B)
- Can interrupt nRF52 MCU on charge status and fault
- Handles switching between USB, VIN, and battery power
- LiPo battery charger
- Charge safety timer, thermal regulation, and thermal shutdown

Fuel gauge

- MAX17043
- I2C interface (Wire1 address 0x36)
- Can interrupt nRF52 MCU on low battery
- Fuel-gauge system for single cell lithium-ion (Li+) batteries
- Precision voltage measurement ±12.5mV Accuracy to 5V
- Accurate relative capacity (RSOC) Ccalculated from ModelGauge algorithm
- No offset accumulation on measurement
- No full-to-empty battery relearning necessary

RTC/Watchdog

Downloaded from Arrow.com.

- Ambiq Micro AM18X5 Real-Time Clock with Power Management
- 55 nA power consumption
- Crystal oscillator
- I2C interface (Wire1 address 0x68)
- Can wake MCU from hibernate (SLEEP_MODE_DEEP) at a specific time using `RTC_INT`.
- Programmable hardware watchdog
- RTC powered by XC6504 ultra-low consumption regulator so the main TPS62291 can be shut down from RTC

Downloaded from Arrow.com.

Wi-Fi Geolocation

The Wi-Fi module is intended for Wi-Fi geolocation only. It cannot be used as a network interface instead of using cellular.

- ESP32-D2WD
- SPI Interface
- Connected to SPI1 (MISO1, MOSI1, SCK1)
- Chip Select: WIFI_CS (CS Decoder 3)
- Interrupt: ESP32 IO4 is connected to MCP23S17 I/0 Expander GPA4.

The SoM connector has several pins dedicated to Wi-Fi:

#	Pin	Function	Connected To	Description
11	WIFI_EN	IO	WIFI & IOEX	ESP32 enable. Can be controlled by this pin or software.
12	WIFI_BOOT	IO	WIFI & IOEX	ESP32 boot mode. Can be controlled by this pin or software.
13	WIFI_TXD	OUT	WIFI	ESP32 serial TX
14	WIFI_RXD	IN	WIFI	ESP32 serial TX

The WIFI_EN pin turns on the Wi-Fi module. LOW=Off, HIGH=On. The default is off (with a 100K weak pull-down). It can be turned on from Pin 11 on the SoM connection, or in software from the MCP23S17 I/0 Expander 0.3.

The WIFI_BOOT pin enables programming mode.

3.3V Regulator

- Texas Instruments TPS62291
- 1.0A at 3.3V
- Powers nRF52840 MCU and ESP32 Wi-Fi module
- Can be used by your base board to power 3.3V components
- 3.3V supply can be powered down from the RTC/Watchdog

RADIO SPECIFICATIONS

nRF52840

- Bluetooth® 5, 2.4 GHz
  - 95 dBm sensitivity in 1 Mbps Bluetooth® low energy mode
  - 103 dBm sensitivity in 125 kbps Bluetooth® low energy mode (long range)
  - 20 to +8 dBm TX power, configurable in 4 dB steps

4G LTE cellular characteristics for EG91-EX

Parameter	Value
Protocol stack	3GPP Release 13
RAT	LTE Cat 1
LTE FDD Bands	Band 28 (700 MHz)
	Band 20 (800 MHz)
	Band 8 (900 MHz)
	Band 3 (1800 MHz)
	Band 1 (2100 MHz)
	Band 7 (2600 MHz)

Downloaded from Arrow.com.

WCDMA Bands	Band 8 (900 MHz)
	Band 1 (2100)
GSM Bands	EGSM900 (900 MHz)
	DCS1800 (1800 MHz)
Power class	Class 4 (33dBm ± 2dB) for EGSM900
	Class 1 (30dBm ± 2dB) for DCS1800
	Class E2 (27dBm ± 3dB) for EGSM900 8-PSK
	Class E2 (26dBm ± 3dB) for DCS1800 8-PSK
	Class 3 (24dBm ± 3dB) for WCDMA bands
	Class 3 (23dBm ± 2dB) for LTE FDD bands

4G LTE cellular characteristics for BG96-MC

Parameter	Value
Protocol stack	3GPP Release 13
RAT	LTE Cat M1
LTE FDD Bands	Band 12 (700 MHz)
	Band 12 (700 MHz)
	Band 13 (700 MHz)
	Band 28 (700 MHz)
	Band 20 (800 MHz)
	Band 5 (850 MHz)
	Band 18 (850 MHz)
	Band 19 (850 MHz)
	Band 26 (850 MHz)
	Band 8 (900 MHz)
	Band 4 (1700 MHz)
	Band 3 (1800 MHz)
	Band 2 (1900 MHz)
	Band 25 (1900 MHz)
	Band 1 (2100 MHz)

ESP32

Espressif Systems ESP32 for Wi-Fi geolocation:

Feature	Description
WLAN Standards	IEEE 802.11b/g/n
Antenna Port	Single Antenna
Frequency Band	2412 to 2484 MHz

Downloaded from Arrow.com.

I/O CHARACTERISTICS

These specifications are based on the nRF52840 datasheet.

Symbol	Parameter	Min	Typ	Max	Unit
VIH	Input high voltage	0.7 xVDD		VDD	V
VIL	Input low voltage	VSS		0.3 xVDD	V
VOH,SD	Output high voltage, standard drive, 0.5 mA, VDD ≥1.7	VDD - 0.4		VDD	V
VOH,HDH	Output high voltage, high drive, 5 mA, VDD >= 2.7 V	VDD - 0.4		VDD	V
VOH,HDL	Output high voltage, high drive, 3 mA, VDD >= 1.7 V	VDD - 0.4		VDD	V
VOL,SD	Output low voltage, standard drive, 0.5 mA, VDD ≥1.7	VSS		VSS + 0.4	V
VOL,HDH	Output low voltage, high drive, 5 mA, VDD >= 2.7 V	VSS		VSS + 0.4	V
VOL,HDL	Output low voltage, high drive,3 mA, VDD >= 1.7 V	VSS		VSS + 0.4	V
IOL,SD	Current at VSS+0.4 V, output set low, standard drive, VDD≥1.7	1	2	4	mA
IOL,HDH	Current at VSS+0.4 V, output set low, high drive, VDD >= 2.7V	6	10	15	mA
IOL,HDL	Current at VSS+0.4 V, output set low, high drive, VDD >= 1.7V	3			mA
IOH,SD	Current at VDD-0.4 V, output set high, standard drive, VDD≥1.7	1	2	4	mA
IOH,HDH	Current at VDD-0.4 V, output set high, high drive, VDD >= 2.7V	6	9	14	mA
IOH,HDL	Current at VDD-0.4 V, output set high, high drive, VDD >= 1.7V	3			mA
tRF,15pF	Rise/fall time, standard drivemode, 10-90%, 15 pF load[1]		9		ns
tRF,25pF	Rise/fall time, standard drive mode, 10-90%, 25 pF load[1]		13		ns
tRF,50pF	Rise/fall time, standard drive mode, 10-90%, 50 pF load[1]		25		ns
tHRF,15pF	Rise/Fall time, high drive mode, 10-90%, 15 pF load[1]		4		ns
tHRF,25pF	Rise/Fall time, high drive mode, 10-90%, 25 pF load[1]		5		ns
tHRF,50pF	Rise/Fall time, high drive mode, 10-90%, 50 pF load[1]		8		ns
RPU	Pull-up resistance	11	13	16	kΩ
RPD	Pull-down resistance	11	13	16	kΩ
CPAD	Pad capacitance		3		pF
CPAD_NFC	Pad capacitance on NFC pads		4		pF
INFC_LEAK	Leakage current between NFC pads when driven to different states		1	10	µA

- Rise and fall times based on simulations
- GPIO default to standard drive (2mA) but can be reconfigured to high drive (9mA) in Device OS 2.0.0 and later using the `pinSetDriveStrength()` function.

Downloaded from Arrow.com.

Mechanical specifications

DIMENSIONS AND WEIGHT

Parameter	Value	Units
Width	28	mm
Length	93	mm
Thickness	4	mm
Weight		g

Weight will be provided at a later date.

MECHANICAL DRAWING

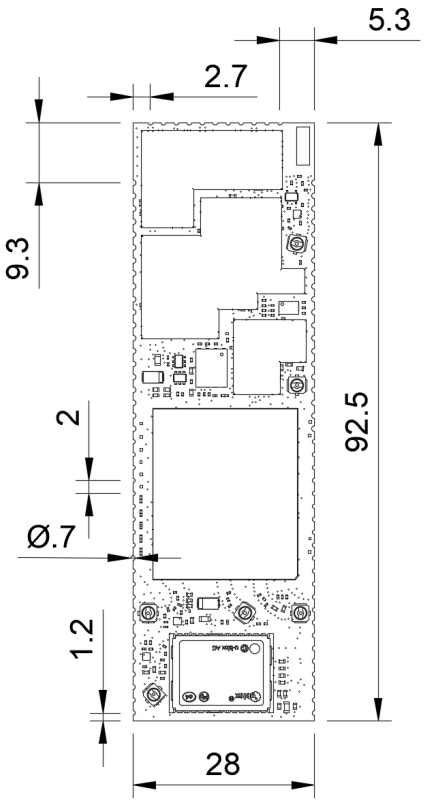

Dimensions are in millimeters.

FOOTPRINT

A footprint, symbol, and device for Eagle CAD can be found in Particle-devices.lbr in the hardware-libraries Github.

You can place traces and vias under the Tracker SoM module, except in the tRestrict area (red with dots) in the footprint. There are exposed manufacturing test pads on the bottom of the SoM in this rectangles, and you should avoid traces on the top layer and visa in this area.

Downloaded from Arrow.com.

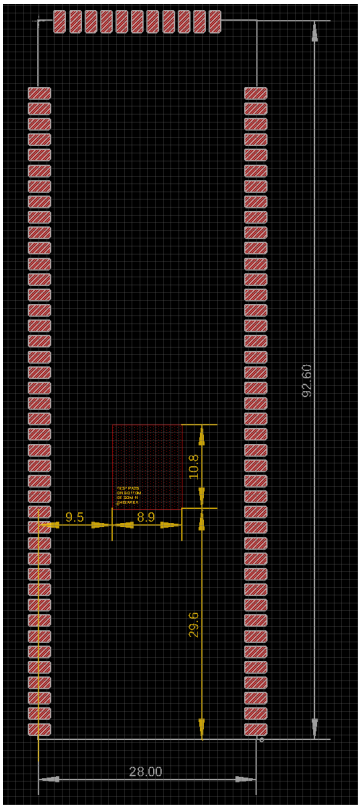

3D MODELS

3D models of the Tracker SoM module are available in the hardware-libraries Github in formats including step, iges, and stl.

The 3D models are the same for the T404 and T402. They are also the same for the T524 and T523, as the only changes are the SIM card, which is not visible.

Downloaded from Arrow.com.

MCU

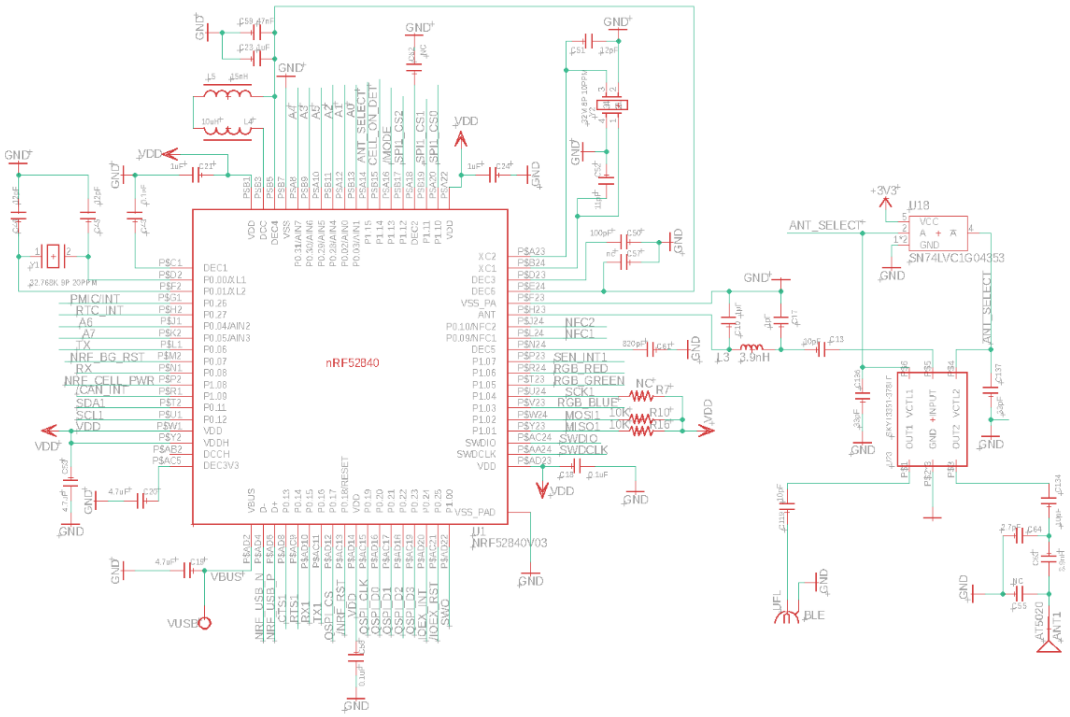

Cellular

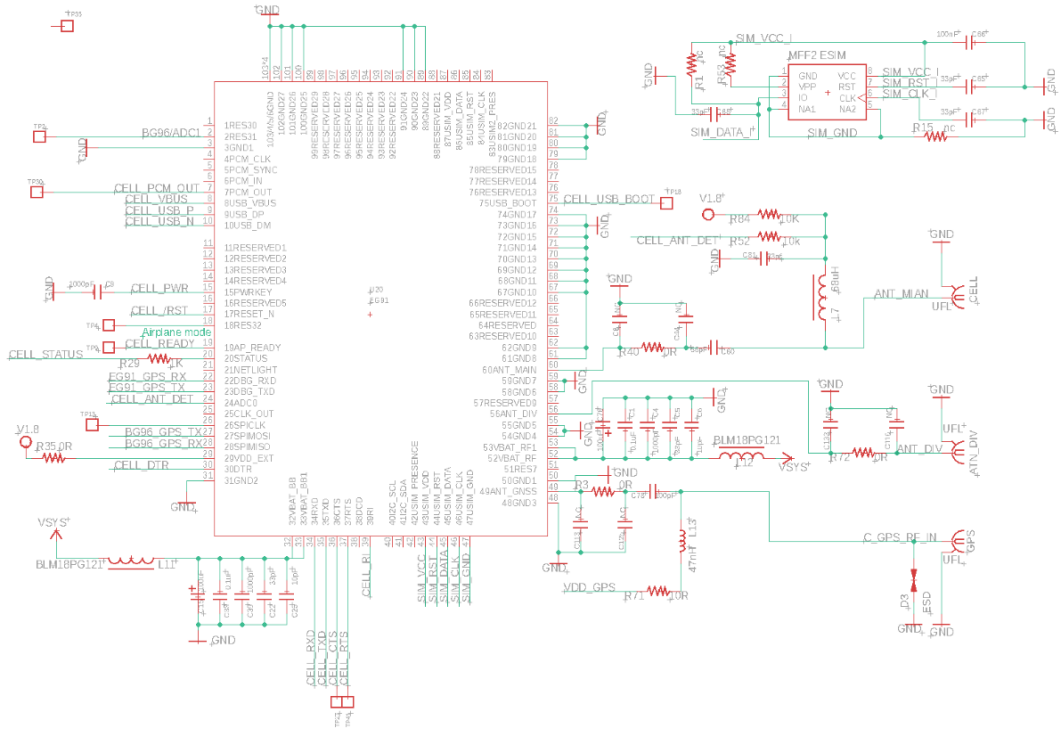

Downloaded from Arrow.com.

GNSS

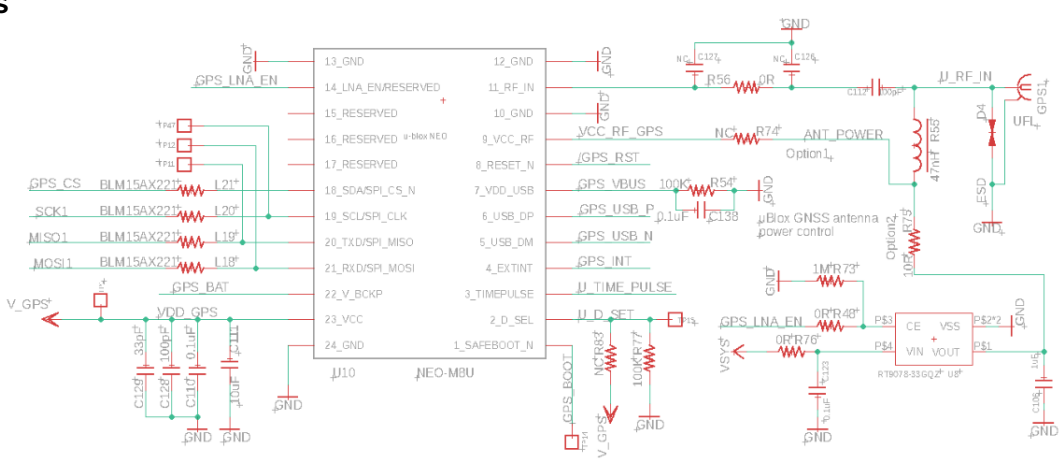

Wi-Fi

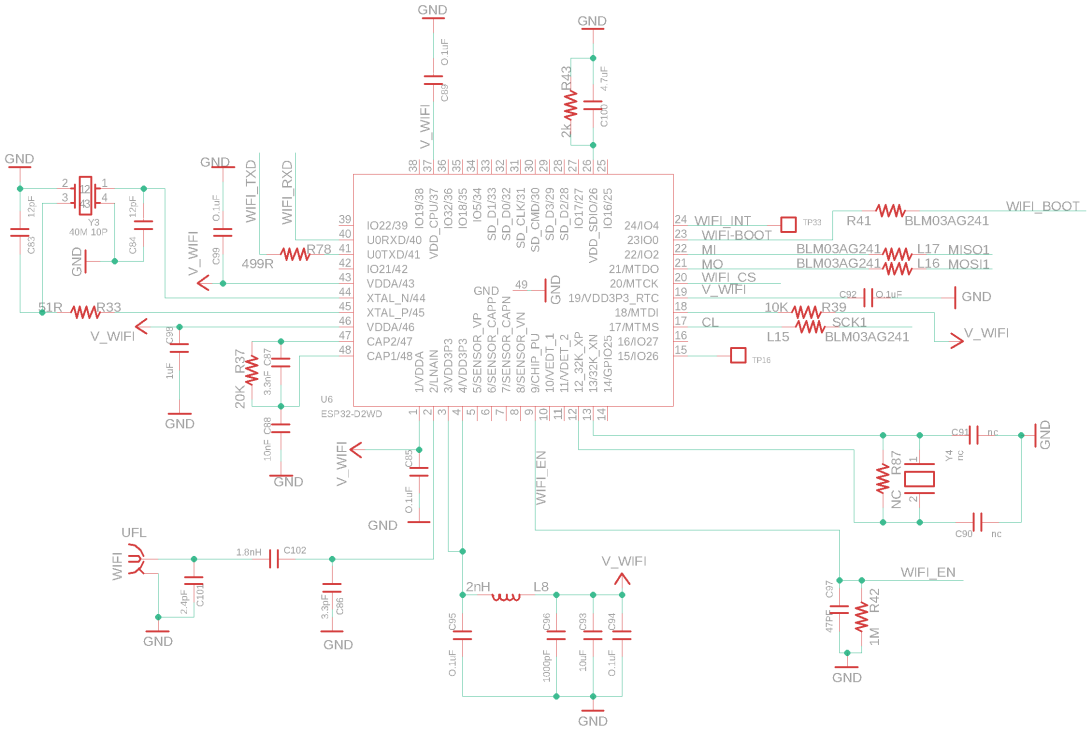

Downloaded from Arrow.com.

CAN

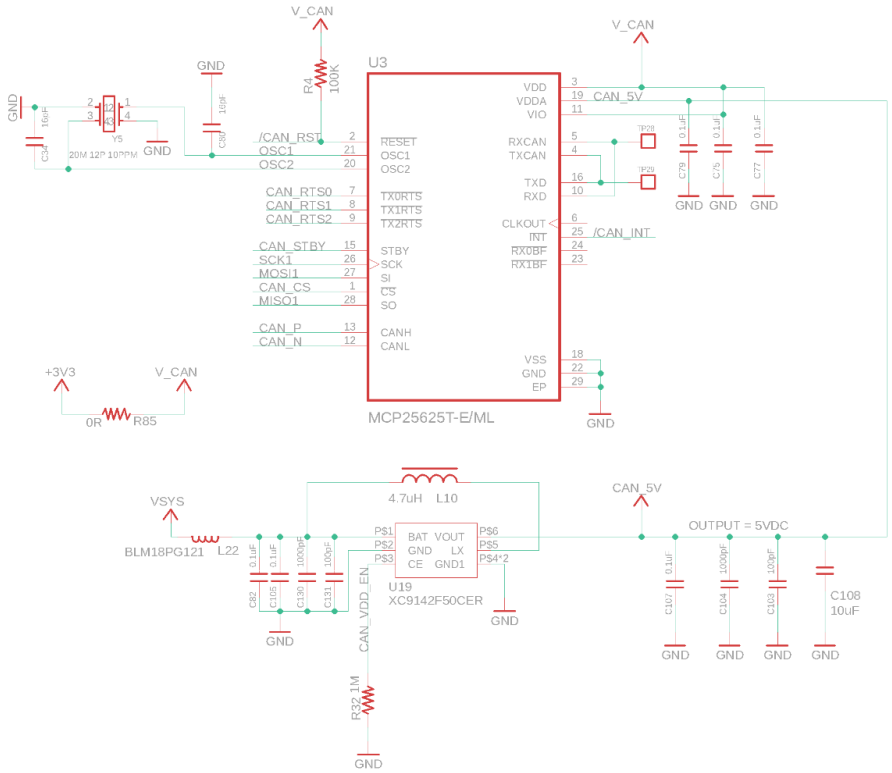

User I/O

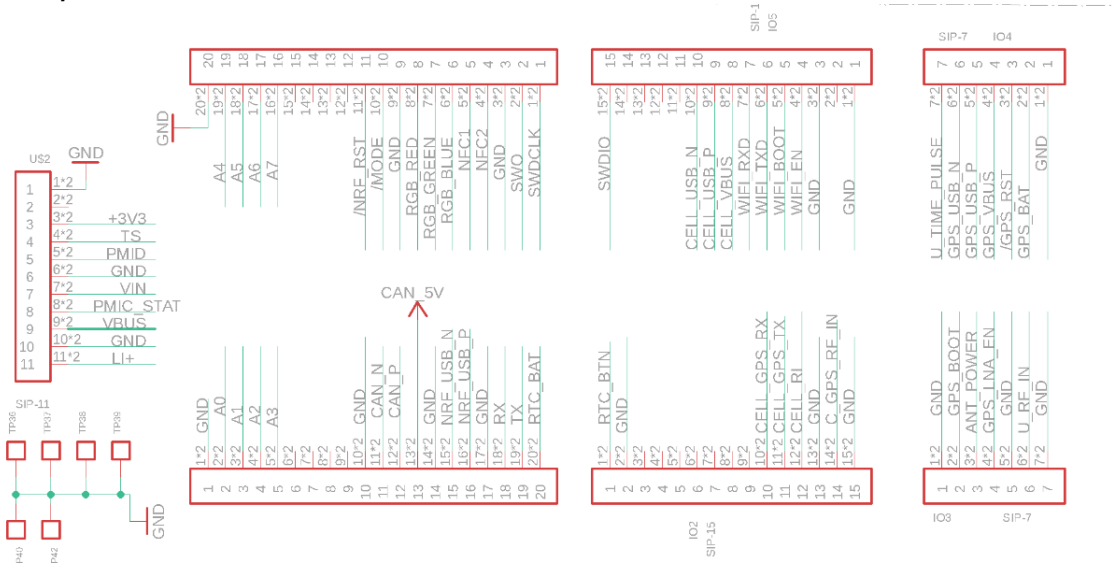

Downloaded from Arrow.com.

PMIC

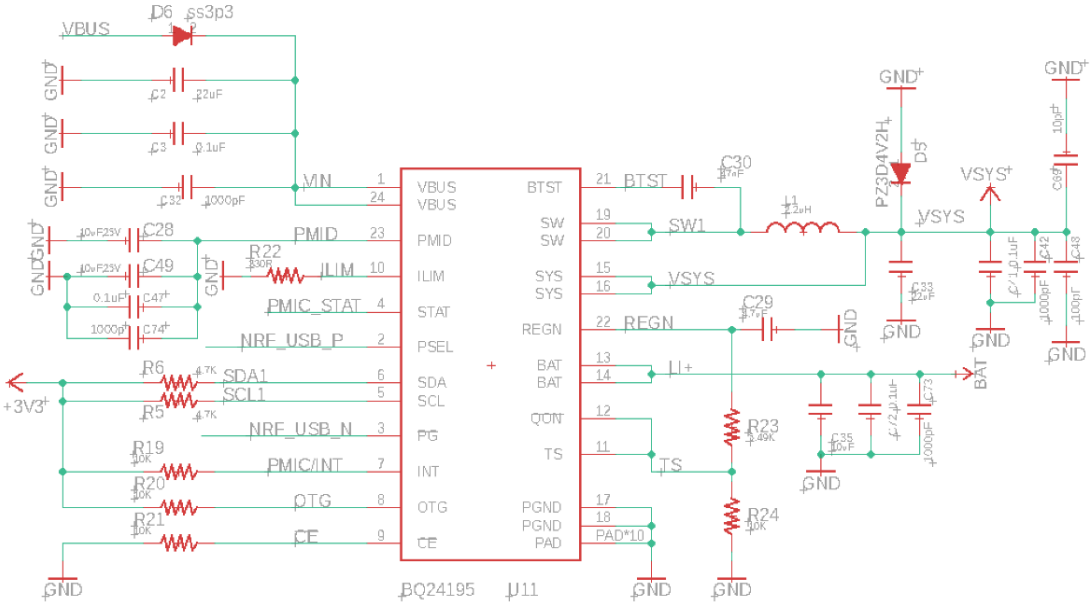

Fuel gauge

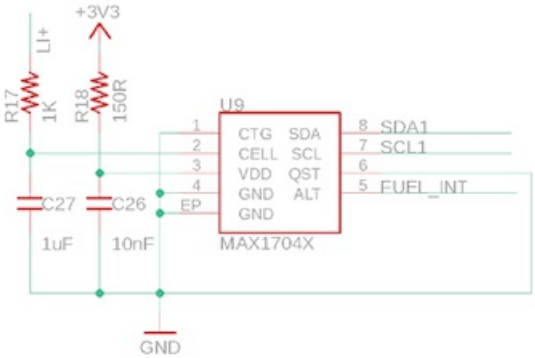

Cell control

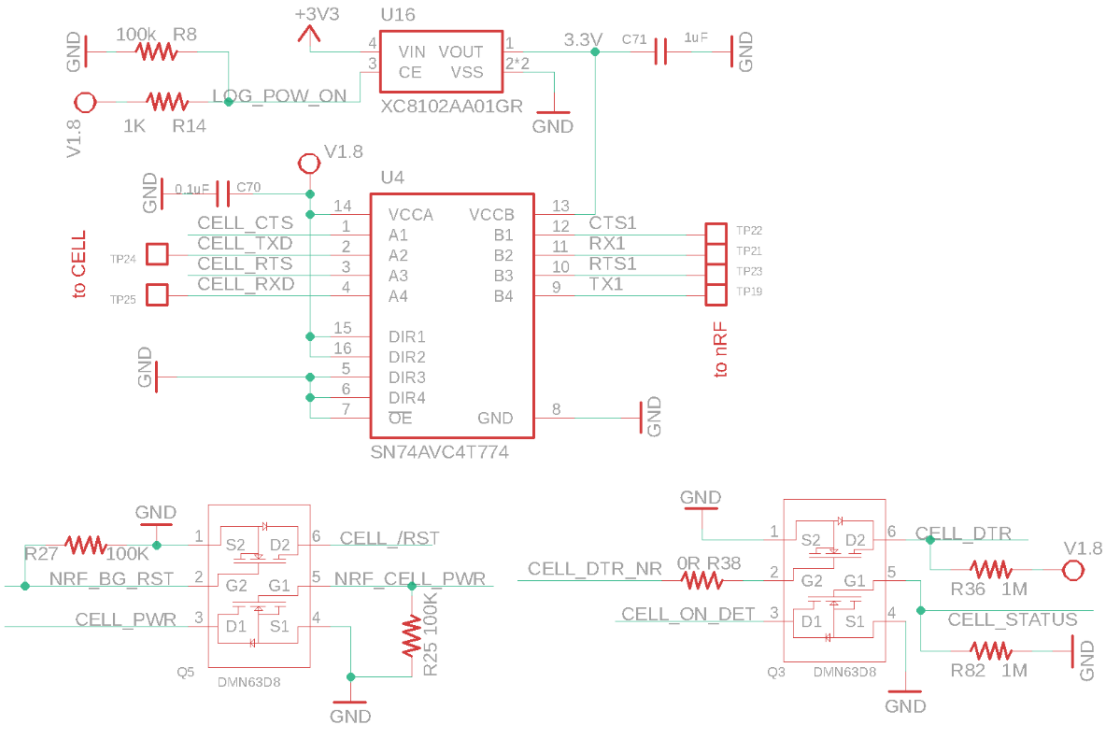

Downloaded from Arrow.com.

I/O expander

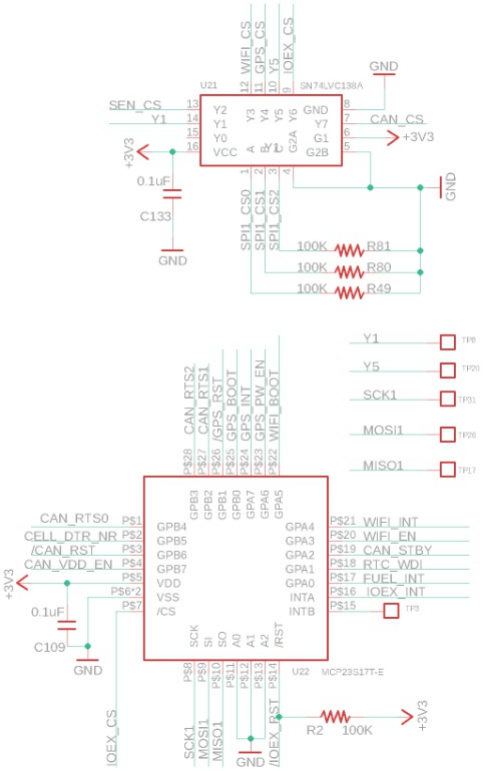

QSPI Flash

RTC/Watchdog

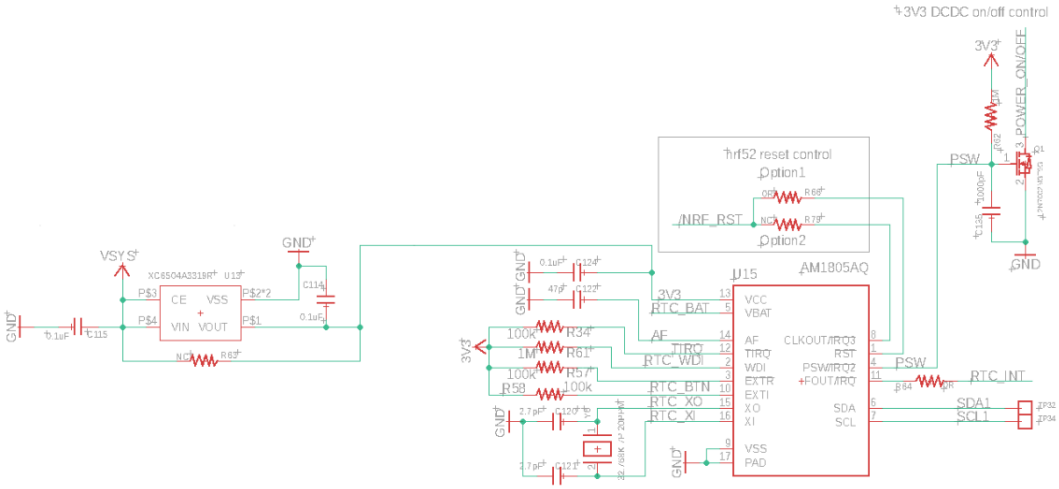

Downloaded from Arrow.com.

IMU

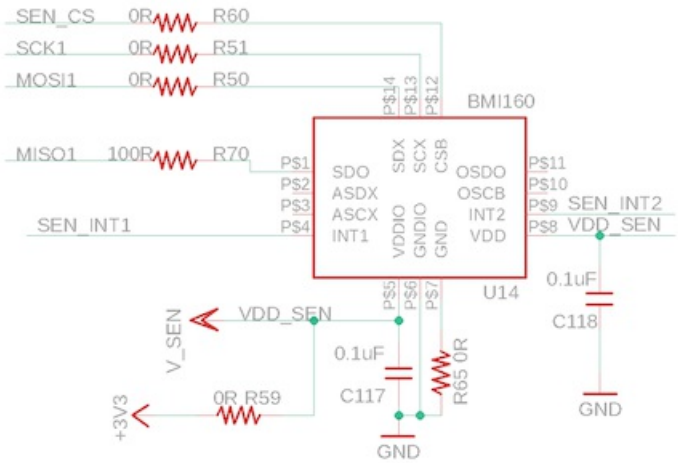

3V3 Regulator

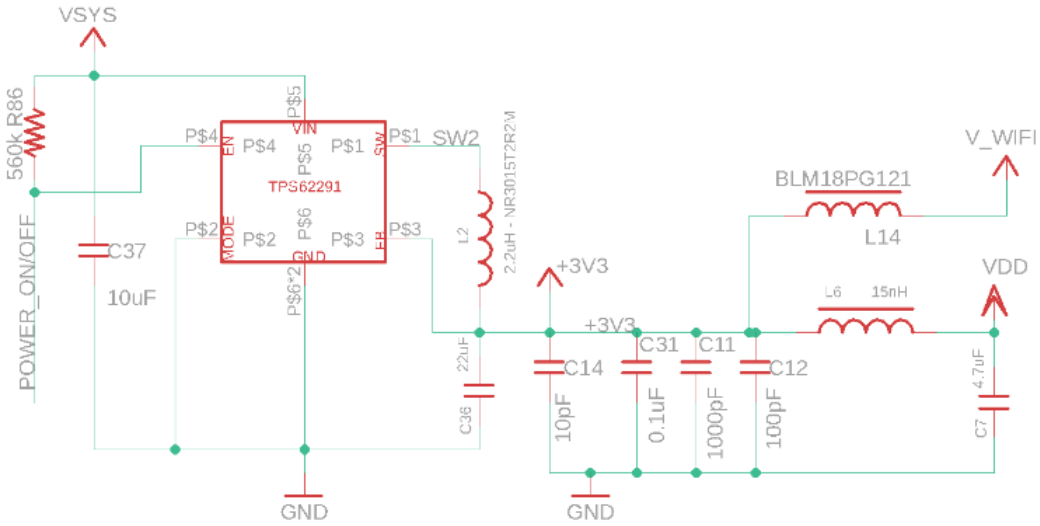

LAYOUT CONSIDERATIONS

For information on production soldering, stencils, and layout, see AN036 LCC Module SMT.

Downloaded from Arrow.com.

Assembly

WATER SOLUBLE FLUX

Water soluble flux should not be used with the Tracker SoM module. There are components within the Tracker SoM that are moisture-sensitive, and wash water can get trapped under the RF shields, causing damage.

Use no-clean flux instead.

CONFORMAL COATINGS

We do not recommend using a conformal coating on the Tracker SoM module to protect the module from water. Some components on the SoM cannot be coated and would need to be masked off during coating. This will make the coating process difficult to implement and test.

Using an enclosure that protects both your base board and the Tracker SoM as a single waterproof assembly is recommended instead. This is the process used by the Tracker One, which includes an IP67-rated enclosure and external connectors.

Downloaded from Arrow.com.

Certification

FCC (UNITED STATES)

Warning: Changes or modifications to this unit not expressly approved by the party responsible for compliance could void the user's authority to operate the equipment.

NOTE: This equipment has been tested and found to comply with the limits for a Class B digital device, pursuant to Part 15 of the FCC Rules. These limits are designed to provide reasonable protection against harmful interference in a residential installation. This equipment generates, uses and can radiate radio frequency energy and, if not installed and used in accordance with the instructions, may cause harmful interference to radio communications.

However, there is no guarantee that interference will not occur in a particular installation. If this equipment does cause harmful interference to radio or television reception, which can be determined by turning the equipment off and on, the user is encouraged to try to correct the interference by one or more of the following measures:

- Reorient or relocate the receiving antenna.
- Increase the separation between the equipment and receiver.
- Consult the dealer or an experienced radio/TV technician for help.
- Connect the equipment into an outlet on a circuit different from that to which the receiver is connected.

The device must not be co-located or operating in conjunction with any other antenna or transmitter.

FCC RF radiation exposure statement

Caution: To maintain compliance with the FCC's RF exposure guidelines, place the product at least 20cm from nearby persons. The module can be installed in mobile or fixed installations only, and it can not be installed in any portable installations.

FCC conditions

This device complies with part 15 of the FCC Rules. Operation is subject to the following two conditions:

1. This device may not cause harmful interference.
2. This device must accept any interference received, including interference that may cause undesired operation. This device complies with Part 15, Part 15.247 of the FCC Rules. The FCC ID for this device is 2AEMI-T40X.

If the FCC ID is not visible with the module is installed inside another device, then it must be still responsible for the FCC compliance requirement of the end product which referring to the enclosed module and it also must display a label, such as the following:

Contains Transmitter module FCC ID: 2AEMI-T40X or contains FCC ID: 2AEMI-T40X The host product manufacturer is responsible for compliance to any other FCC rules that apply to the host not covered by the modular transmitter grant of certification. The final host product still requires Part 15 Subpart B compliance testing with the modular transmitter installed.

The end user manual shall include all required regulatory information / warning as shown in this manual, include: This product must be installed and operated with a minimum distance of 20 cm between the radiator and user body.

Downloaded from Arrow.com.

INNOVATION, SCIENCE AND ECONOMIC DEVELOPMENT CANADA (ISED)

ISED: 20127-T40X

- This device complies with Industry Canada license-exempt RSS standard(s). Operation is subject to the following two conditions:
  - this device may not cause interference.
  - this device must accept any interference, including interference that may cause undesired operation of the device.
- Le présent appareil est conforme aux CNR d'Industrie Canada applicables aux appareils radio exempts de licence. L'exploitation est autorisée aux deux conditions suivantes:
  - l'appareil ne doit pas produire de brouillage, et
  - l'utilisateur de l'appareil doit accepter tout brouillage radioélectrique subi, même si le brouillage est susceptible d'en compromettre le fonctionnement.

- This Class B digital apparatus complies with Canadian ICES-003.
- Cet appareil numérique de la classe B est conforme à la norme NMB-003 du Canada.

- This device and its antenna(s) must not be co-located or operating in conjunction with any other antenna or transmitter, except tested built-in radios.
- Cet appareil et son antenne ne doivent pas être situés ou fonctionner en conjonction avec une autre antenne ou un autre émetteur, exception faites des radios intégrées qui ont été testées.

- The County Code Selection feature is disabled for products marketed in the US/Canada.
- La fonction de sélection de l'indicatif du pays est désactivée pour les produits commercialisés aux États-Unis et au Canada.

Radiation Exposure Statement: This equipment complies with IC radiation exposure limits set forth for an uncontrolled environment. This equipment should be installed and operated with minimum distance 20cm between the radiator & your body.

Déclaration d'exposition aux radiations: Cet équipement est conforme aux limites d'exposition aux rayonnements IC établies pour un environnement non contrôlé. Cet équipement doit être installé et utilisé avec un minimum de 20 cm de distance entre la source de rayonnement et votre corps.

EU DECLARATION OF CONFORMITY

We, Particle Industries, Inc., declare under our sole responsibility that the product, T523M and T524M, to which this declaration relates, is in conformity with RED Directive 2014/53/EU and (EU) 2015/863 RoHS Directive 2011/65/EU (Recast).

The full text of the EU declaration of conformity is available at the following Internet address https://www.particle.io/.

Radiation Exposure Statement: This equipment complies with radiation exposure limits set forth for an uncontrolled environment.

The operating frequency bands and the maximum transmitted power limit are listed below:

- BLE 2402-2480MHz, 10dBm
- Wi-Fi 2.4GHz band 2412-2484MHz, 21.5dBm

Downloaded from Arrow.com.

- LTE B1 B3 B7 B8 B20 B28 704.5-959.3MHz 1710.7-2687.5 MHz, 25dBm
- WCDMA 882.4-957.6 MHz 1922.6-2167.4 MHz, 25dBm

UNITED KINGDOM

UKCA Conformity:

Radio Equipment Regulations 2017 (S.I. 2017/1206)

Downloaded from Arrow.com.

Country compatibility

Country	Model	Technologies	Carriers
Albania	T524	2G, 3G, 4G	Eagle, Telekom, Vodafone
Algeria	T524	2G, 3G, 4G	Mobilis, Ooredoo
Aruba	T524	2G, 3G, 4G	Setar
Australia	T524	4G	Optus, Telstra, Vodafone
Austria	T524	2G, 4G	3 (Drei), A1, T-Mobile
Bahrain	T524	2G, 4G	Zain
Bangladesh	T524	2G, 3G, 4G	Bangalink, GrameenPhone
Belarus	T524	2G, 3G, 4G	A1
Belgium	T524	2G, 4G	Base, Orange, Proximus
Bosnia and Herzegovina	T524	2G, 3G	HT Eronet
Botswana	T524	2G, 3G, 4G	BeMobile
Brunei	T524	3G, 4G	DST
Bulgaria	T524	2G, 3G	A1, Telenor, Vivacom
Burkina Faso	T524	2G, 3G, 4G	Orange
Cabo Verde	T524	2G, 3G, 4G	CVMóvel, Unitel T+
Cambodia	T524	2G, 3G	Metfone
Canada	T404	M1	Bell Mobility, Rogers Wireless, Telus
Chad	T524	2G, 3G, 4G	Airtel
Chile	T524	3G, 4G	Claro, Entel, Movistar
Congo (Brazzaville)	T524	2G, 3G, 4G	Airtel
Congo (Kinshasa)	T524	2G, 3G, 4G	Airtel
Côte d'Ivoire	T524	2G, 3G	MTN
Croatia	T524	2G, 3G, 4G	Hrvatski Telekom, Tele2
Cyprus	T524	2G, 3G, 4G	MTN, PrimeTel
Czechia	T524	2G, 4G	O2, T-Mobile, Vodafone
Denmark	T524	2G, 4G	3 (Tre), TDC, Telenor, Telia
Egypt	T524	2G, 3G, 4G	Etisalat, Orange
Estonia	T524	2G, 3G, 4G	Elisa, Tele2, Telia
eSwatini	T524	2G, 3G, 4G	MTN
Ethiopia	T524	2G, 3G, 4G	Ethio Telecom
Faroe Islands	T524	2G, 3G	Faroese Telecom, Vodafone
Finland	T524	2G, 4G	DNA, Elisa, Telia
France	T524	2G, 3G, 4G	Bouygues, Free Mobile, Orange, SFR
French Guiana	T524	2G, 3G	Digicel
Gabon	T524	2G, 3G, 4G	Airtel
Germany	T524	2G, 4G	O2, Telekom, Vodafone
Ghana	T524	2G, 3G, 4G	AirtelTigo, MTN, Vodafone
Gibraltar	T524	2G, 3G, 4G	Gibtel
Greece	T524	2G, 4G	Cosmote, Vodafone, Wind
Guinea	T524	2G, 3G, 4G	MTN
Guinea-Bissau	T524	2G, 3G, 4G	MTN
Guyana	T524	2G	Digicel

Downloaded from Arrow.com.

Hong Kong	T524	3G, 4G	CMHK, CSL, SmarTone
Hungary	T524	2G, 3G, 4G	Magyar Telekom, Telenor, Vodafone
Iceland	T524	4G	Nova, Siminn, Vodafone
Indonesia	T524	2G, 4G	Indosat, Telkomsel, XL Axiata
Ireland	T524	2G, 3G, 4G	3 (Tre), Meteor, O2, Vodafone
Israel	T524	4G	Hot Mobile, Orange, Pelephone
Italy	T524	2G, 4G	TIM, Vodafone, Wind
Jordan	T524	2G, 3G, 4G	Zain
Kazakhstan	T524	2G, 3G, 4G	Beeline, K-Cell
Kenya	T524	2G, 3G, 4G	Airtel
Kuwait	T524	2G, 3G, 4G	Viva, Zain
Latvia	T524	2G, 4G	Bite, LMT, Tele2
Liechtenstein	T524	2G, 3G, 4G	Mobilkom, Orange
Lithuania	T524	2G, 4G	Bite, Omnitel, Tele2
Luxembourg	T524	2G, 4G	Orange, POST, Tango
Macao	T524	3G, 4G	CTM
Madagascar	T524	2G, 3G, 4G	Airtel
Malawi	T524	2G, 3G, 4G	Airtel
Malaysia	T524	2G, 4G	Celcom, DiGi, Maxis
Malta	T524	2G, 3G, 4G	Go Mobile, Vodafone
Mexico	T404	M1	AT&T, Telcel
Moldova	T524	2G, 3G, 4G	Moldcell, Orange
Mongolia	T524	2G, 3G	Mobicom, Unitel
Montenegro	T524	2G, 3G, 4G	Mtel, T-Mobile, Telenor
Morocco	T524	2G, 3G, 4G	Inwi, Medi Telecom
Mozambique	T524	2G, 3G, 4G	Vodacom
Myanmar	T524	2G, 3G, 4G	MPT, Telenor
Namibia	T524	2G, 3G, 4G	Telecom Namibia
Netherlands	T524	2G, 3G, 4G	KPN, T-Mobile, Vodafone
New Zealand	T524	4G	2degrees, Spark, Vodafone
Nigeria	T524	2G, 3G, 4G	9mobile, Airtel, Glo, MTN
Norway	T524	2G, 3G, 4G	TDC, Telenor, Telia
Pakistan	T524	2G, 3G, 4G	Mobilink, Telenor, Ufone, Warid
Palestine	T524	2G, 3G	Jawwal
Papua New Guinea	T524	2G, 3G	bmobile
Poland	T524	2G, 3G, 4G	Orange, Play, Plus, T-Mobile
Portugal	T524	2G, 3G, 4G	NOS, TMN, Vodafone
Qatar	T524	2G, 4G	Ooredoo, Vodafone
Romania	T524	2G, 4G	Orange, Telekom Romania, Vodafone
Rwanda	T524	2G, 3G	Airtel, MTN
Serbia	T524	2G, 3G, 4G	Telenor, VIP
Seychelles	T524	2G, 3G, 4G	Airtel
Sint Maarten	T524	2G, 3G	TelCell
Slovakia	T524	2G, 4G	O2, Orange, Telekom
Slovenia	T524	2G, 3G, 4G	A1, Mobitel

Downloaded from Arrow.com.

South Africa	T524	2G, 3G, 4G	Cell C, MTN, Vodacom
South Korea	T524	3G, 4G	KT, LG U+, SK Telecom
South Sudan	T524	2G, 3G	MTN
Spain	T524	2G, 3G, 4G	Orange, Telefonica, Vodafone, Yoigo
Sri Lanka	T524	2G, 4G	Dialog, Mobitel
Suriname	T524	2G, 3G	Telesur
Sweden	T524	2G, 4G	3 (Tre), Tele2, Telenor, Telia
Switzerland	T524	3G, 4G	Salt, Sunrise, Swisscom
Taiwan	T524	4G	Chunghwa, FarEasTone, T Star, Taiwan Mobile
Tanzania	T524	2G, 3G, 4G	Airtel
Thailand	T524	2G, 3G, 4G	AIS, DTAC, True Move
Tunisia	T524	2G, 3G, 4G	Orange Tunisie, Tunisie Telecom
Uganda	T524	2G, 3G, 4G	Africell, Airtel, MTN
United Kingdom	T524	2G, 4G	3, EE, O2, Vodafone
United States	T404	M1	AT&T, T-Mobile (USA), Verizon[7]
Vietnam	T524	3G, 4G	MobiFone, Viettel, Vinaphone
Zambia	T524	2G, 3G, 4G	Airtel

[7]Verizon in the United States is only supported on enterprise plans.

Downloaded from Arrow.com.

Ordering information

SKU	Description	Region	Modem	EtherSIM	Lifecycle	Replacement
T404MEA	Tracker SoM LTE M1 (NorAm, EtherSIM), [x1]	NORAM	BG96-MC	✓	GA	
T404MTY	Tracker SoM LTE M1 (NorAm, EtherSIM), Tray [x50]	NORAM	BG96-MC	✓	GA	
T524MEA	Tracker SoM LTE CAT1/3G/2G (Europe, EtherSIM), [x1]	EMEAA	EG91-EX	✓	GA	
T524MTY	Tracker SoM LTE CAT1/3G/2G (Europe, EtherSIM), Tray [x50]	EMEAA	EG91-EX	✓	GA	
T402MTY	Tracker SoM LTE M1 (NorAm), Tray [x50]	NORAM	BG96-MC		NRND	T404MTY
T402MEA	Tracker SoM LTE M1 (NorAm), [x1]	NORAM	BG96-MC		Deprecated	T404MEA
T523MEA	Tracker SoM LTE CAT1/3G/2G (Europe), [x1]	EMEAA	EG91-EX		Deprecated	T524MEA
T523MTY	Tracker SoM LTE CAT1/3G/2G (Europe), Tray [x50]	EMEAA	EG91-EX		Deprecated	T524MTY

†EMEAA: Selected countries in Europe, Middle East, Africa, and Asia, including Australia and New Zealand. See the cellular carrier list for more information.

Downloaded from Arrow.com.

Product handling

ESD PRECAUTIONS

The Tracker SoM contains highly sensitive electronic circuitry and is an Electrostatic Sensitive Device (ESD). Handling an module without proper ESD protection may destroy or damage it permanently. Proper ESD handling and packaging procedures must be applied throughout the processing, handling and operation of any application that incorporates the module. ESD precautions should be implemented on the application board where the B series is mounted. Failure to observe these precautions can result in severe damage to the module!

CONNECTORS

The U.FL antenna connectors are not designed to be constantly plugged and unplugged. The antenna pin is static sensitive and you can destroy the radio with improper handling. A tiny dab of glue (epoxy, rubber cement, liquid tape or hot glue) on the connector can be used securely hold the plug in place.

DISPOSAL

This device must be treated as Waste Electrical & Electronic Equipment (WEEE) when disposed of.

Any WEEE marked waste products must not be mixed with general household waste, but kept separate for the treatment, recovery and recycling of the materials used. For proper treatment, recovery and recycling; please take all WEEE marked waste to your Local Authority Civic waste site, where it will be accepted free of charge. If all consumers dispose of Waste Electrical & Electronic Equipment correctly, they will be helping to save valuable resources and preventing any potential negative effects upon human health and the environment of any hazardous materials that the waste may contain.

Downloaded from Arrow.com.

Default settings

The AssetTracker SoM comes pre-programmed with a bootloader and a user application called Tinker. This application works with an iOS and Android app also named Tinker that allows you to very easily toggle digital pins, take analog and digital readings and drive variable PWM outputs.

The bootloader allows you to easily update the user application via several different methods, USB, OTA, Serial Y-Modem, and also internally via the Factory Reset procedure. All of these methods have multiple tools associated with them as well.

Downloaded from Arrow.com.

Revision history

Revision	Date	Author	Comments
pre1	2020 Mar 31	RK	Preview Release 1
pre2	2020 May 12	RK	Added partial dimensions
001	2020 Jun 29	RK	First release
002	2020 Jul 10	RK	Updated absolute maximum ratings, schematics
003	2020 Jul 17	RK	Updated absolute maximum ratings
004	2020 Jul 30	RK	Added explanation of DIV connector
005	2020 Aug 06	RK	Added crystal to block diagram, added FCC information
006	2020 Aug 18	RK	Added ISED (Canada) information
007	2020 Sep 08	RK	Added ISED (Canada) information
008	2020 Sep 09	RK	Remove 3GPP E-UTRA from T402
009	2020 Sep 16	RK	Added power consumption information
010	2002 Sep 25	RK	Fixed typo in Istop_usart maximum current
011	2002 Oct 01	RK	Fixed VIN maximum voltage in text (is 17V not 12V)
012	2021 Feb 03	RK	Change CAN output current to 370 mA
013	2021 Mar 15	RK	Updated model, carrier, ordering information
014	2021 May 04	RK	Added 2G/3G fallback information for T523/T524
015	2021 May 28	RK	Corrected band list for T402/T404 (BG96)
016	2021 Jun 28	RK	Added Device OS 3.1 memory map information
017	2021 Jul 28	RK	Added mechanical drawing
018	2021 Sep 10	RK	Changed wording of peak vs. max current
019	2021 Sep 23	RK	Corrected part number for CAN step-up converter
020	2022 Jul 18	RK	Correct typo in hot start time on Beidou
021	2022 Aug 29	RK	Added EU declaration of conformity
022	2022 Sep 16	RK	Added UKCA conformity
023	2023 Jan 31	RK	Add Device OS versions
024	2023 Mar 17	RK	Pin table listed wrong maximum current for CAN_5V
025	2023 Apr 28	RK	Add conformal coating and flux notes
026	2023 Jul 19	RK	Block diagram had incorrect RGB pins
027	2023 Nov 20	RK	Added link to footprint and restrict information
028	2023 Dec 23	RK	Clarify use of PMID pin
029	2024 May 06	RK	Updated list of supported GNSS
030	2024 May 20	RK	Remove sentence about an external Wi-Fi geolocation service being required

Downloaded from Arrow.com.