DISK #	DWG SIZE
H3	B

DATA CONTAINED IN THIS DOCUMENT IS PROPRIETARY TO TROMPETER ELECTRONICS INC. AND SHALL NOT BE DISCLOSED, COPIED OR USED FOR PROCUREMENT OR MANUFACTURE WITHOUT EXPRESS WRITTEN PERMISSION.

REVISIONS					
REV	EO	DESCRIPTION	DWN	APPROVED	DATE
C	8850	L/M.ITEM 1 WAS 8-2611 & REDWN	AAH	LS, BM, [illegible]	6-4-90

3-0130 SH 1

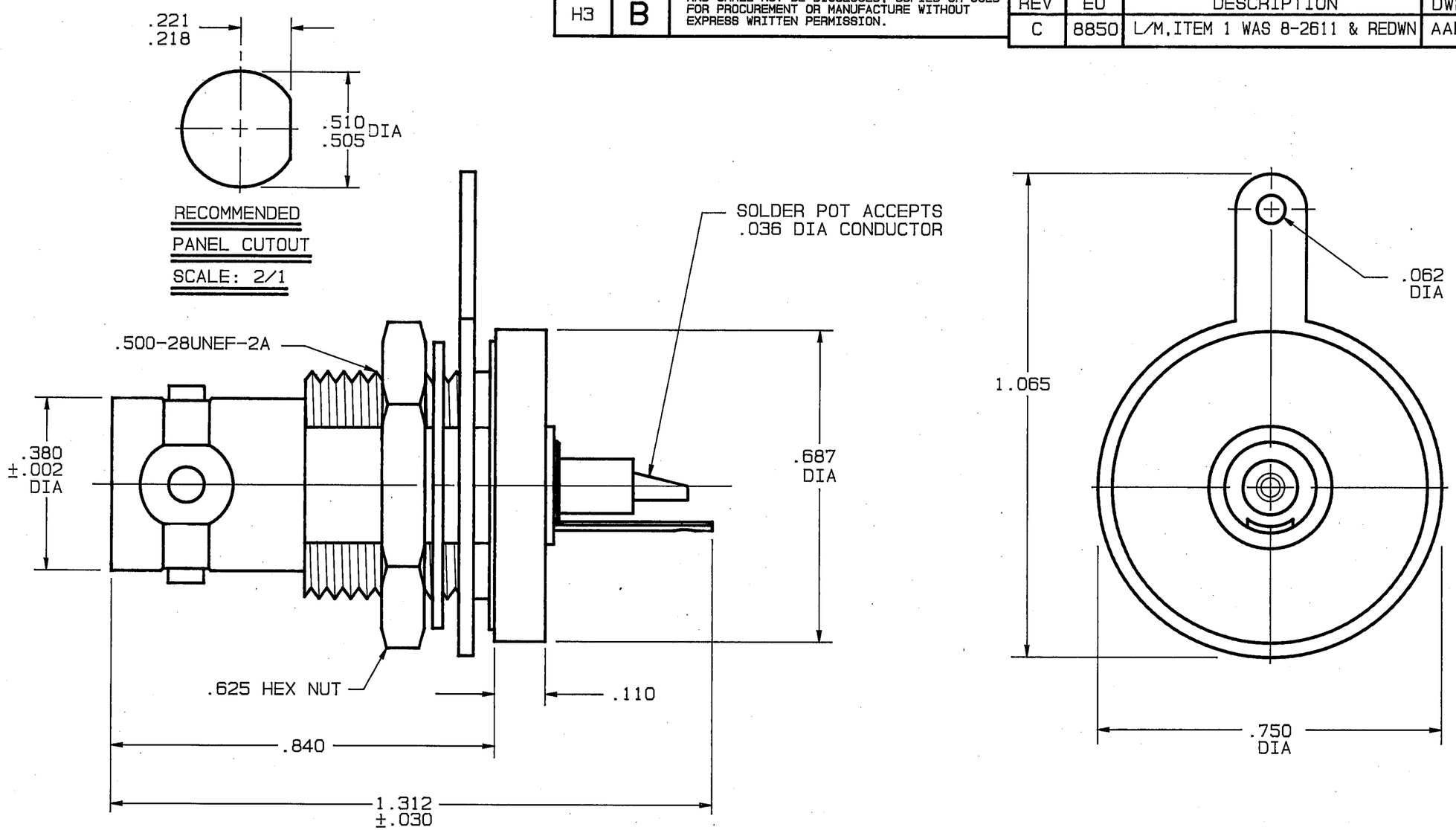

INCH	MM
.002	0.05
.005	0.13
.030	0.76
.036	0.91
.062	1.57
.110	2.79
.208	5.28
.218	5.54
.221	5.61
.240	6.10
.380	9.65
.505	12.83
.510	12.95
.625	15.88
.687	17.45
.750	19.05
.840	21.34
1.065	27.05
1.312	33.32

4. MAX PANEL THK .240 W/O SOLDER LUG
   .208 THK W/ SOLDER LUG
3. CONCENTRIC TWINAX/TRIAX TRB
   REAR MOUNT SOLDER POT
   BULKHEAD RECEPTACLE
2. FINISH: TFS-1A (NICKEL)
1. ALL DIM ARE IN INCHES

QTY	DESCRIPTION	PART NUMBER	ITEM

TOL UNLESS SPECIFIED
.XX ±
.XXX ±.005
.XXXX±
ANGLES±

TROMPETER ELECTRONICS, INC.

BJ76FL

DWN	AAH	5-14-90	MATERIAL	CODE IDENT	DRAWING NO.	REV
CHK	LS	5/31/90	———	14949	3-0130	C
ENGR	BM	6/1/90				
APPR	[illegible]	6-4-90	SCALE 4/1	DATE 12/15/87	SHEET 1 OF 2	

NEXT ASSY

Downloaded from Arrow.com.