MICRO SWITCH
a Honeywell Division
FED. MFG. CODE 91929

# SWITCH-TOGGLE (MAGNETIC HOLD-IN)

CATALOG LISTING
**25ET35-T**

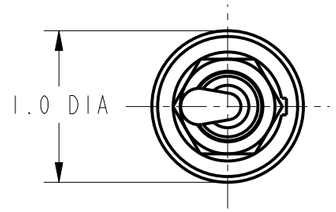


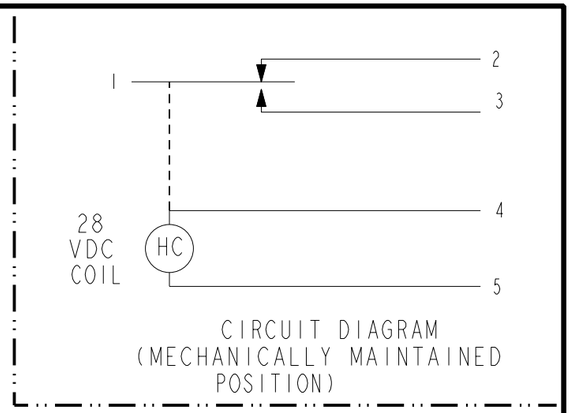


CIRCUIT DIAGRAM (MECHANICALLY MAINTAINED POSITION)

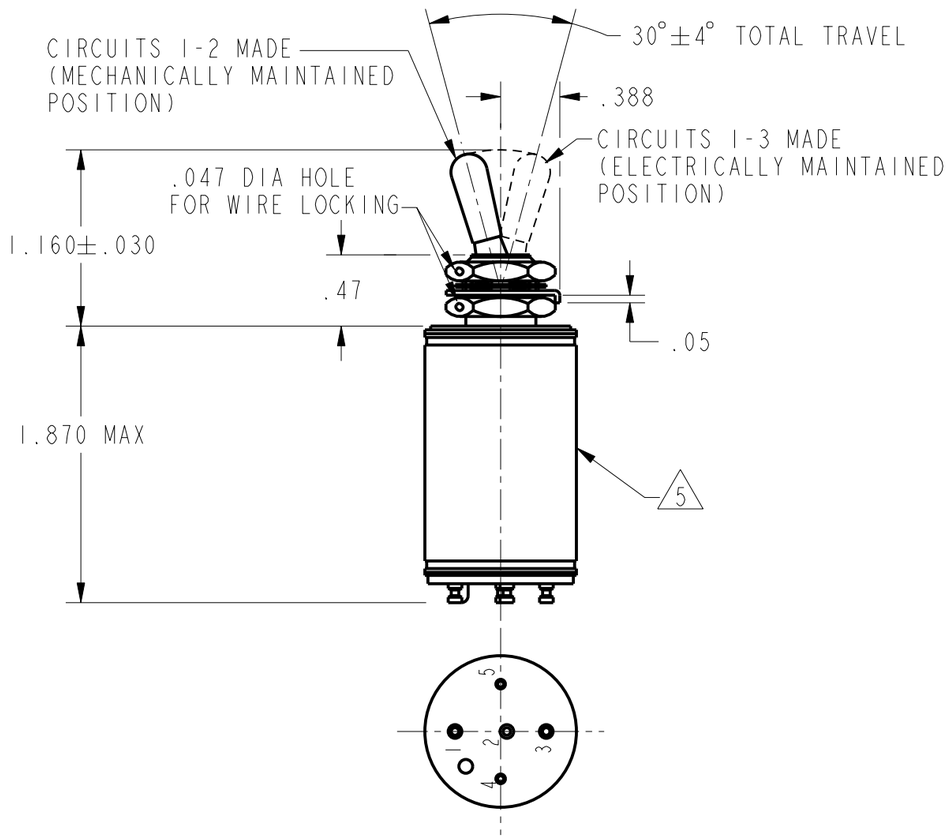


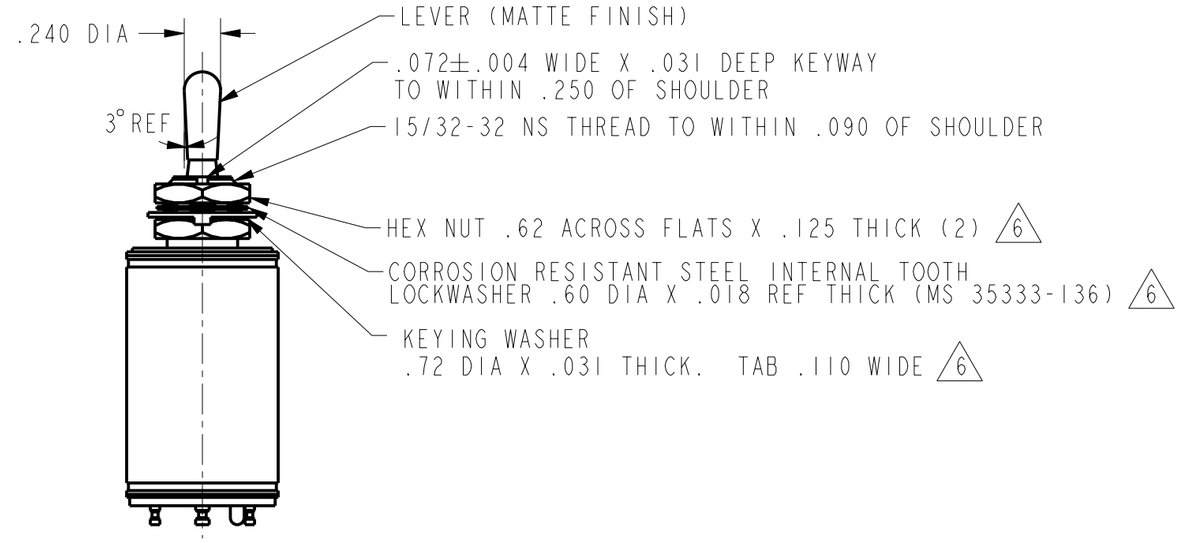


NOTES

1 - EXPOSED PARTS ARE OF CORROSION RESISTANT MATERIAL OR ARE SUITABLY PROTECTED TO PREVENT CORROSION ENCLOSURE FINISHED WITH BLUE EPOXY BASED ENAMEL COLOR NO. 25184 PER FEDERAL STANDARD 595

2 - SWITCH SEALED PER MIL-S-5594

3 - HOLD IN VOLTAGE: THE MINIMUM SPECIFIED VOLTAGE AT WHICH THE LEVER WILL REMAIN ACTUATED. HOLD IN MAY OCCUR AT A LOWER VALUE. DROP OUT VOLTAGE: THE VOLTAGE RANGE IN WHICH THE LEVER WILL BE RELEASED

4 - CIRCUITS CAN BE TRANSFERRED MANUALLY. ENERGIZING THE COIL WILL NOT CAUSE TRANSFER OF CIRCUITS

5 - CIRCUIT IDENTIFICATION IS SHOWN ON SWITCH

6 - HARDWARE MAY BE FURNISHED UNASSEMBLED PER MIL-S-5594

THIS DRAWING COVERS A PROPRIETARY ITEM AND IS THE PROPERTY OF MICRO SWITCH. A DIVISION OF HONEYWELL. THIS DRAWING IS NOT TO BE COPIED OR USED WITHOUT THE APPROVAL OF MICRO SWITCH

THIRD ANGLE PROJECTION

SCALE FULL

DO NOT SCALE PRINT

UNLESS OTHERWISE SPECIFIED TOLERANCES ARE

| | | |
|---|---|---|
| ONE PLACE | (.0) | ±.030 |
| TWO PLACE | (.00) | ±.015 |
| THREE PLACE | (.000) | ±.005 |
| ANGLES | | ± |

WEIGHT 4.0 OZ MAX

~~ANSI Y14.5M-1982 APPLIES~~

CHARACTERISTICS 3

SOLENOID RATING AT 20°C

| | |
|---|---|
| STEADY STATE LIMITS | 20-29 VDC |
| HOLD IN | 15 VDC |
| DROP OUT | 0-15 VDC |
| COIL RESISTANCE | 460 OHM MIN |
| OPERATING FORCE | 7 LBS MAX |
| OVERRIDE FORCE AT 29 VDC | 10 LBS MAX |

ELECTRICAL DATA

CONTACT ARRANGEMENT
SPDT

| VOLTAGE | RATINGS IN AMPHERES | | | | | | | |
|---|---|---|---|---|---|---|---|---|
| | SEA LEVEL | | | | 65,000 FT | | | |
| | INRUSH | RES | IND | MOTOR | INRUSH | RES | IND | MOTOR |
| 28 VOLTS DC | | 4 | 3 | 4 | | 4 | 2.5 | 4 |

CATALOG LISTING 25ET35-T
PAGE 1 OF 1
ISSUE 4
REVISIONS
A 205763 CSL 11 JUN 02
REPLACES -
RELEASE NO. PR-4885
CHECK
CHECK 11 JUN 02
SAV 11 JUN 02
CHECK
PTC/CAD 2D
DRAWN CSL 11 JUN 02

Downloaded from Arrow.com.

MICRO SWITCH
a Honeywell Division
FED. MFG. CODE 91929

# SWITCH-TOGGLE (MAGNETIC HOLD-IN)

CATALOG LISTING
**25ET35-T**

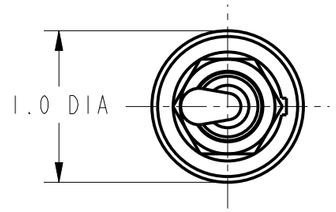


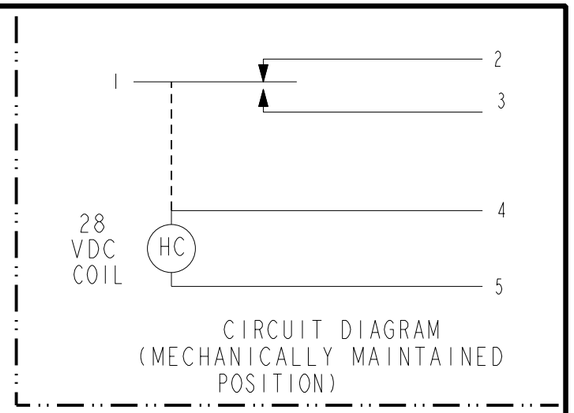


CIRCUIT DIAGRAM (MECHANICALLY MAINTAINED POSITION)

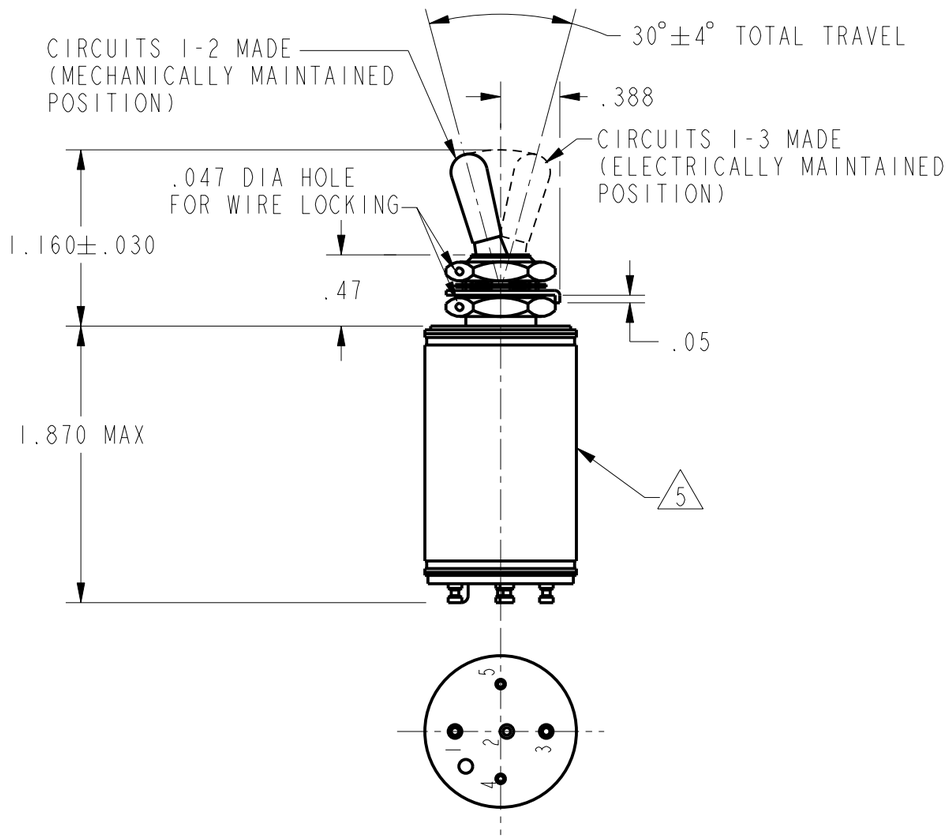


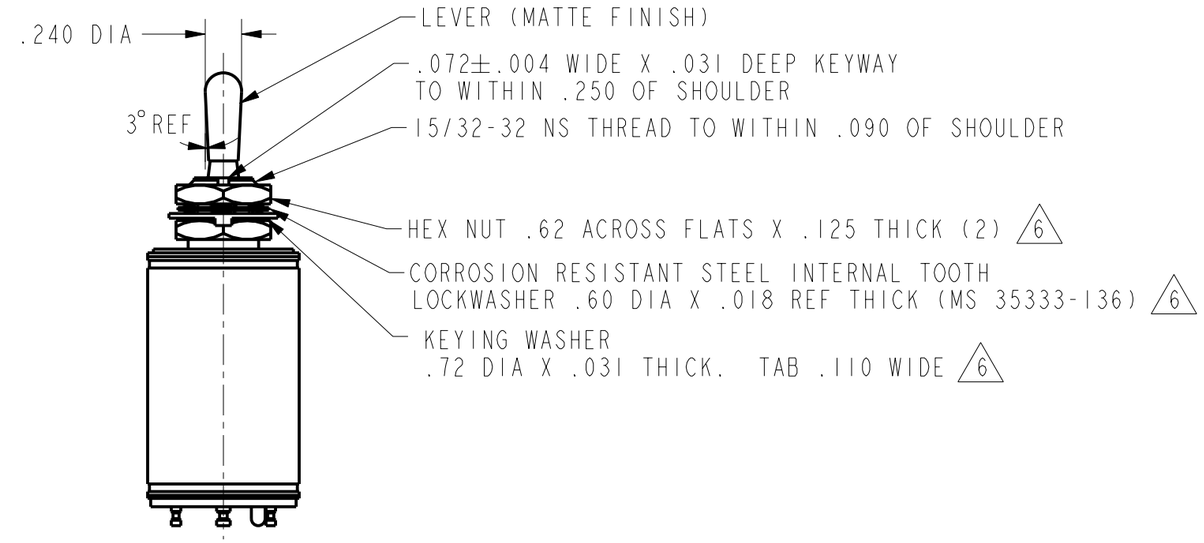


NOTES

1 - EXPOSED PARTS ARE OF CORROSION RESISTANT MATERIAL OR ARE SUITABLY PROTECTED TO PREVENT CORROSION ENCLOSURE FINISHED WITH BLUE EPOXY BASED ENAMEL COLOR NO. 25184 PER FEDERAL STANDARD 595

2 - SWITCH SEALED PER MIL-S-5594

3 - HOLD IN VOLTAGE: THE MINIMUM SPECIFIED VOLTAGE AT WHICH THE LEVER WILL REMAIN ACTUATED. HOLD IN MAY OCCUR AT A LOWER VALUE. DROP OUT VOLTAGE: THE VOLTAGE RANGE IN WHICH THE LEVER WILL BE RELEASED

4 - CIRCUITS CAN BE TRANSFERRED MANUALLY. ENERGIZING THE COIL WILL NOT CAUSE TRANSFER OF CIRCUITS

5 - CIRCUIT IDENTIFICATION IS SHOWN ON SWITCH

6 - HARDWARE MAY BE FURNISHED UNASSEMBLED PER MIL-S-5594

THIS DRAWING COVERS A PROPRIETARY ITEM AND IS THE PROPERTY OF MICRO SWITCH. A DIVISION OF HONEYWELL. THIS DRAWING IS NOT TO BE COPIED OR USED WITHOUT THE APPROVAL OF MICRO SWITCH

THIRD ANGLE PROJECTION

SCALE FULL

DO NOT SCALE PRINT

UNLESS OTHERWISE SPECIFIED TOLERANCES ARE

| | | |
|---|---|---|
| ONE PLACE | (.0) | ±.030 |
| TWO PLACE | (.00) | ±.015 |
| THREE PLACE | (.000) | ±.005 |
| ANGLES | | ± |

WEIGHT 4.0 OZ MAX

~~ANSI Y14.5M-1982 APPLIES~~

CHARACTERISTICS 3

SOLENOID RATING AT 20°C

| | |
|---|---|
| STEADY STATE LIMITS | 20-29 VDC |
| HOLD IN | 15 VDC |
| DROP OUT | 0-15 VDC |
| COIL RESISTANCE | 460 OHM MIN |
| OPERATING FORCE | 7 LBS MAX |
| OVERRIDE FORCE AT 29 VDC | 10 LBS MAX |

ELECTRICAL DATA

CONTACT ARRANGEMENT
SPDT

| VOLTAGE | RATINGS IN AMPHERES | | | | | | | |
|---|---|---|---|---|---|---|---|---|
| | SEA LEVEL | | | | 65,000 FT | | | |
| | INRUSH | RES | IND | MOTOR | INRUSH | RES | IND | MOTOR |
| 28 VOLTS DC | | 4 | 3 | 4 | | 4 | 2.5 | 4 |

REVISIONS

| | | |
|---|---|---|
| A | 205763 | CSL 11 JUN 02 |

25ET35-T
CATALOG LISTING
PAGE 1 OF 1
RELEASE NO. PR-4885
REPLACES -
ISSUE 4
CHECK
CHECK
11 JUN 02
S A V
CHECK
11 JUN 02
CSL
DRAWN
PTC/CAD 2D

Downloaded from Arrow.com.