D2EW-R

Sealed Ultra Subminiature Basic Switch with Integrated Resistors

Detection of four states by internal resistor
Long stroke sealed switch

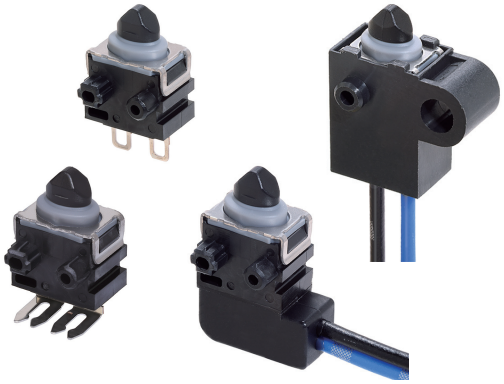

- The industry's smallest class * (8.3 x 7.0 x 5.3 mm) D2GW equivalent size.
- Four states (switch ON/OFF, short circuit, open circuit) are output.
- Supports multi-angle operation without using a lever, increased flexibility in customer unit design.
- A sliding contact structure delivers high contact reliability and quiet operation.

✻Based on OMRON investigation in November 2024

⚠ **Refer to the *Precautions* on page 7.**

Model Number Legend

D2EW - □ - □ □ □ □ - □

(1) (2) (3) (4) (5) (6)

(1)Circuit structure
R1: Series circuit
R5: Parallel circuit

(2)Mounting Structure
B : Post
SC: M3-screw mounting models (Only lead wires type)

(3)Actuator
0: Pin plunger

(4)Contact Form
3: SPST-NO

(5)Terminals
L : Long press-fit terminals
H : Solder terminals
M : Molded lead wires downwards
MR: Molded lead wires on right-side
ML: Molded lead wires on left-side

(6)Special Specification

List of Models

Actuator	Terminals	Model / Circuit structure	Post	M3-screw mounting models
Pin plunger	Long press-fit terminals	Series circuit	D2EW-R1-B03L	
		Parallel circuit	D2EW-R5-B03L	
	Solder terminals	Series circuit	—	
		Parallel circuit	D2EW-R5-B03H	
	Molded lead wires downwards	Series circuit	—	—
		Parallel circuit	—	D2EW-R5-SC03M
	Molded lead wires on right-side	Series circuit	—	
		Parallel circuit	D2EW-R5-B03MR	
	Molded lead wires on left-side	Series circuit	—	
		Parallel circuit	—	

If you have any desired model with a specification not in this model number legend, contact your OMRON sales representative.
We will consider if a requested model can be manufactured by modifying existing models.

Downloaded from Arrow.com.

Contact Specifications

Contact	**Specification**	Slide
	Material	Gold plated

Note: For more information on the minimum applicable load, refer to *Using Micro Loads* of *Precautions*.

Electrical characteristic

		R1	R5
Rating voltage		5 to 18 VDC	
Resistance value *1	**Resistor1**	5,110 Ω	3,920 Ω
	Resistor2	1,620 Ω	511 Ω
Output resistance *2	**FP-OP**	6,730 Ω ± 4%	3,920 Ω ± 4%
	OP-TTP	1,620 Ω ± 4%	452 Ω ± 4%
Rated power of tip resisters *1		Environment temperature -40°C to 85°C: 0.33 W	Environment temperature -40°C to 57°C: 0.33 W Environment temperature 57°C to 70°C: 0.27 W Environment temperature 70°C to 85°C: 0.20 W
Circuit diagram *2		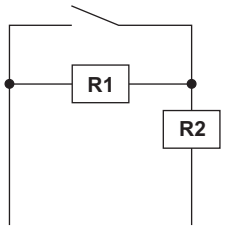	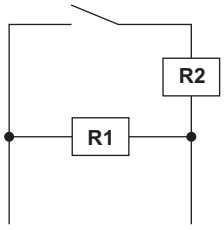

✻1. The resistance value and power rating of resistors 1 and 2 can be changed.
Contact your OMRON sales representative for details.
✻2. Avoid use outside of the operating temperature range of -40°C to +85°C.
Temperature might cause output resistance to fluctuate which induces malfunction.

Characteristics

Items		
Permissible operating speed		30 to 500 mm/s (pin plunger models)
Permissible operating frequency	**Mechanical**	30 operations/min Max.
	Electrical	30 operations/min Max.
Vibration resistance *1	**Malfunction** **Destruction**	Frequency: 10 to 55 Hz Amplitude: 1.5 mm Direction Time: X,Y and Z 10 minutes per axis
Shock resistance	**Destruction**	1,000 m/s^2 Max.
	Malfunction *1	300 m/s^2 Max.
Durability *2	**Mechanical**	300,000 operations Min. (at 30 operations/min)
	Electrical	300,000 operations Min. (at 30 operations/min)
Degree of protection		IEC IP67 (excluding the terminals)
Ambient operating temperature		-40 to +85°C (at 60%RH Max.) (with no icing or condensation)
Ambient operation humidity		95%RH Max. (for +5 to +35°C)
Heart resistance		85°C 500 hours
Cold resistance		-40°C 500 hours
Humidity resistance		85°C 85%RH 500 hours
Temperature cycle resistance		-40°C (0.5hours) ⇔ 85°C (0.5 hours) 500 cycles
Weight		Approx. 0.5 g (For terminals)

Note: The data given above are initial values.
✻1. For the pin plunger models, the above values apply for use at the free position, and total travel position.
Close or open circuit of the contact is 1 ms Max.
✻2. For testing conditions, consult your OMRON sales representative.

Downloaded from Arrow.com.

Mounting Structure

●Post

SPST-NO

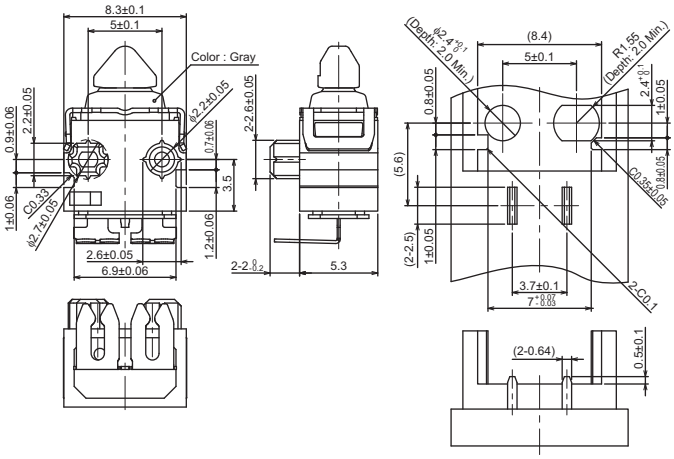

●M3-screw Mounting Models

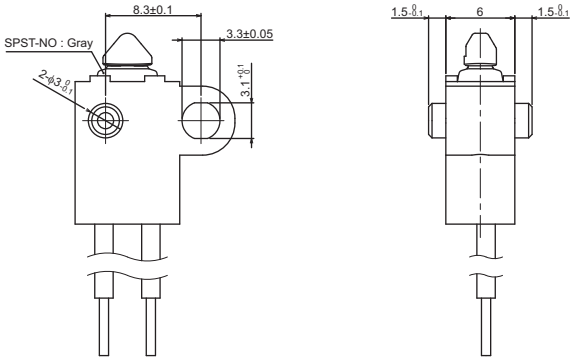

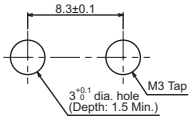

Downloaded from Arrow.com.

Terminals

(Unit: mm)

●Long press-fit terminals

SPST-NO

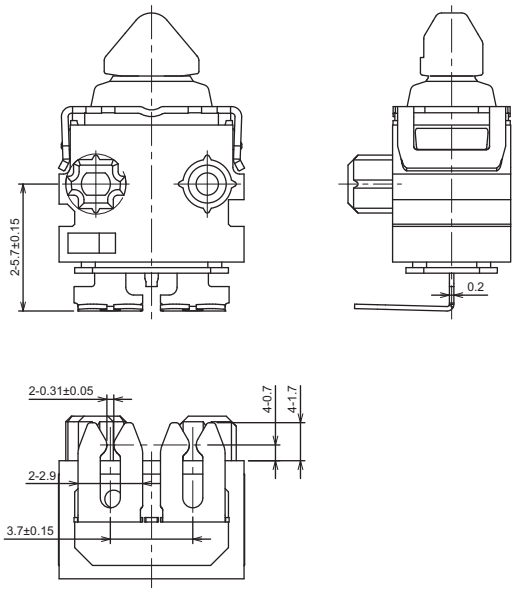

●Solder terminals

SPST-NO

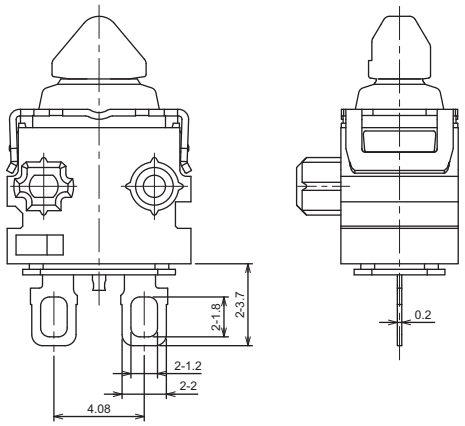

●Molded lead wires downwards

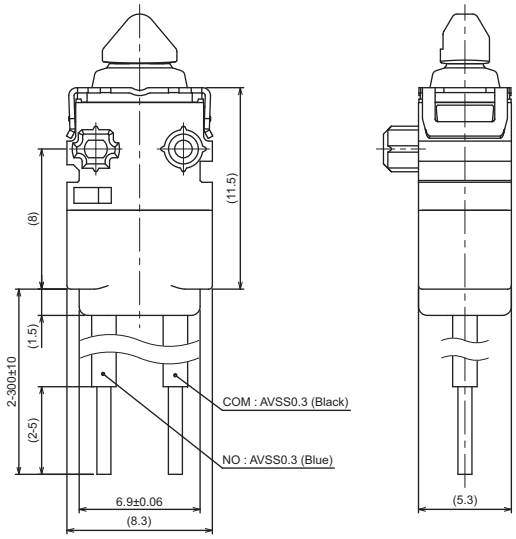

●M3-screw Mounting Models

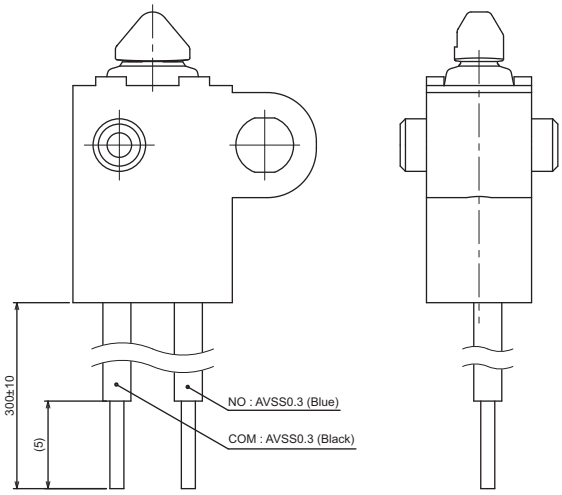

●Molded Lead Wires on Right-side

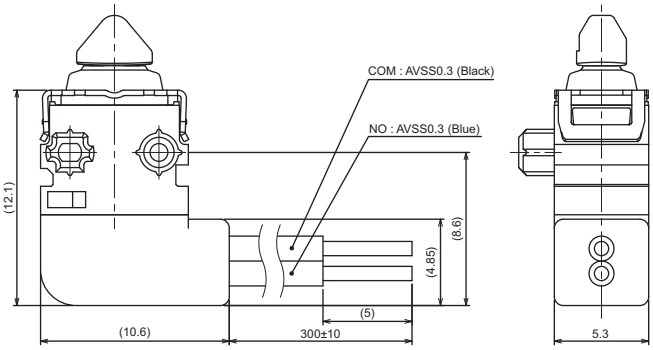

OMRON
Downloaded from Arrow.com.

Dimensions / Operating Characteristics and Reference Positions (Unit: mm)

CAD Data marked products, 2D drawings and 3D CAD models are available.
For CAD information, please visit our website, which is noted on the last page.

The following drawing is for example model. When ordering, replace □ with the code for the rating that you need. For the combination of models, refer to *List of Models*.

●Post

Long press-fit terminals
Solder terminals
Molded lead wires downwards
Molded lead wires on right-side
Molded lead wires on left-side
D2EW-R□-B0□□

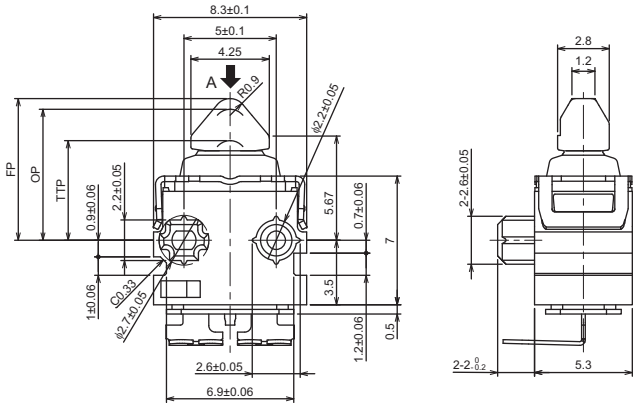

Operating characteristics	Type	Post
Operating Force	OF Max.	1.2 N {122 gf}
Releasing Force	RF Min.	0.1 N {10 gf}
Overtravel	OT	1.7 mm (reference value)
Movement Differential	MD Max.	0.25 mm
Free Position	FP Max.	7.8 mm
Operating Position	OP	7.1±0.2 mm
Total Travel Position	TTP	5.4 mm

CAD Data

●M3-screw Mounting Models

Molded lead wires downwards
D2EW-R□-SC0□M

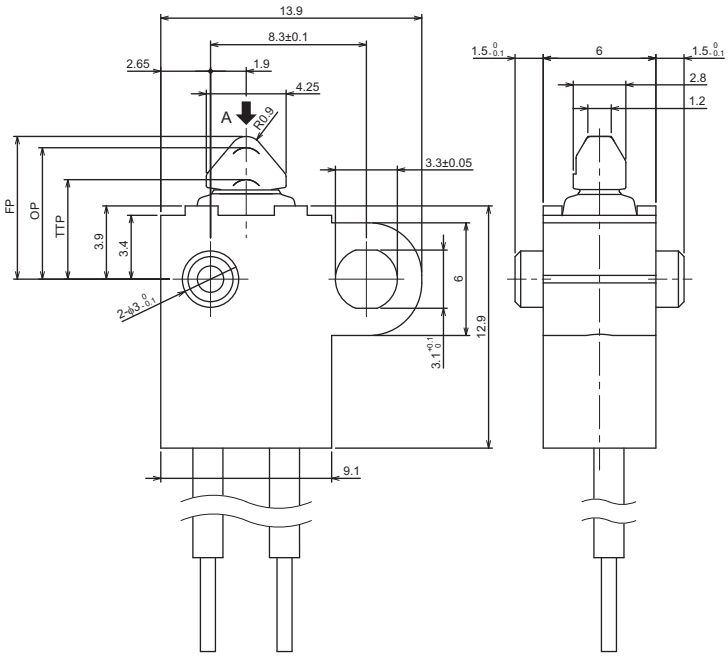

Operating characteristics	Type	M3-screw Mounting Models
Operating Force	OF Max.	1.2 N {122 gf}
Releasing Force	RF Min.	0.1 N {10 gf}
Overtravel	OT	1.7 mm (reference value)
Movement Differential	MD Max.	0.25 mm
Free Position	FP Max.	7.7 mm
Operating Position	OP	7.0±0.25 mm
Total Travel Position	TTP	5.3 mm

CAD Data

Note: 1. Unless otherwise specified, a tolerance of ±0.2 mm applies to all dimensions.
Note: 2. The operating characteristics are for operation in the A direction (⬇).

Downloaded from Arrow.com.

Operation allowable angle

It can be operated not only from above (Vertical), but also from the side (Horizontal) up to 90 degrees.

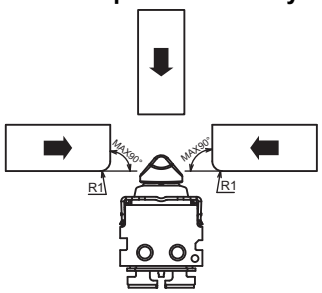

Note: Do not operate from the direction shown in the figure below.
It is not designed to be operated from this direction.

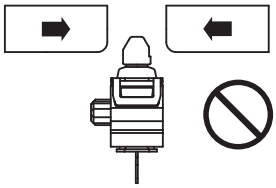

When operating from the side, position the operating body according to the following dimensions.
This may cause damage or reduced performance.

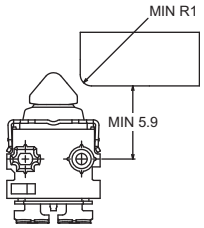

Post

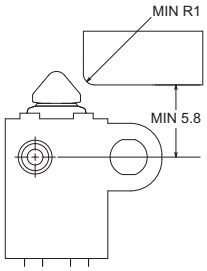

M3-screw mounting models

OMRON
Downloaded from Arrow.com.

Precautions

Please refer to "**Safety Precautions for All Detection Switches**" for correct use.

Cautions

Degree of Protection

- Do not use this product underwater.
  Satisfy the test conditions for the standard given below, this test is to check the ingress of water into the switch enclosure after submerging the Switch in water for a given time. Satisfying this test condition does not mean that the Switch can be used underwater.
  JIS C0920:
  Degrees of protection provided by enclosures of electrical apparatus (IP Code)
  IEC 60529:
  Degrees of protection provided by enclosures (IP Code)
  Degree of protection: IP67
  (check water intrusion after immersion for 30 min. submerged 1m underwater)
- Do not operate the Switch when it is exposed to water spray, or when water drops adhere to the Switch surface, or during sudden temperature changes, otherwise water may intrude into the interior of the Switch due to a suction effect.
- Prevent the Switch from coming into contact with oil and chemicals. Otherwise, damage to or deterioration of Switch materials may result.
- Do not use the Switch in areas where it is exposed to silicon adhesives, oil, or grease. Otherwise faulty contact may result due to the generation of silicon oxide.

Soldering

- When soldering the lead wire to the terminal, first insert the lead wire conductor through the terminal hole and then conduct soldering.
  Make sure that the temperature of the soldering iron tip does not exceed 300°C, and complete the soldering within 3 seconds. Do not apply any external force for 1 minute after soldering.
  Soldering at an excessively high temperature or soldering for more than 3 seconds may deteriorate the characteristics of the Switch.
  In case of automatic soldering, please do not apply the heat beyond 260°C within 5 seconds. Pay careful attention so that flux or solder liquid does not flow over the edge of the PCB panel.

Horizontal and rotational operations

- Factors such as the operating speed, operating frequency, push-button indentation, and material and shape will affect the durability of the Switch. Confirm performance specifications under actual operating conditions before using the Switch in applications.

Correct Use

Mounting

- Turn OFF the power supply before mounting or removing the Switch, wiring, or performing maintenance or inspection. Failure to do so may result in electric shock or burning.
- For models with posts, secure the posts by pressing into an attached device. Provide guides on the opposite ends of the posts to ensure that they do not fall out or rattle.
- For M3-screw mounting models, use M3 mounting screws with plane washers or spring washers to securely mount the Switch. Tighten the screws to a torque of 0.27 to 0.29 N·m {27.5 to 29.5 gf}. Exceeding the specified torque may result in deterioration of the sealing or damage.
- When mounting a Press-fit terminals, press in A (body) and B (terminal) in the drawing below at the same time.
  If A (body) only is pressed in, the Press-fit terminals will be deformed and will not be properly inserted.
  Also, ensure that the Press-fit terminals is facing down when it is inserted. Mold the terminal part with urethane resin, etc., and use it in a state where the terminal part does not come into contact with outside air.Avoid connecting soldered or laser-welded terminals.
  Avoid mounting in conditions exposed to corrosive gases, high temperature and humidity, and dust.

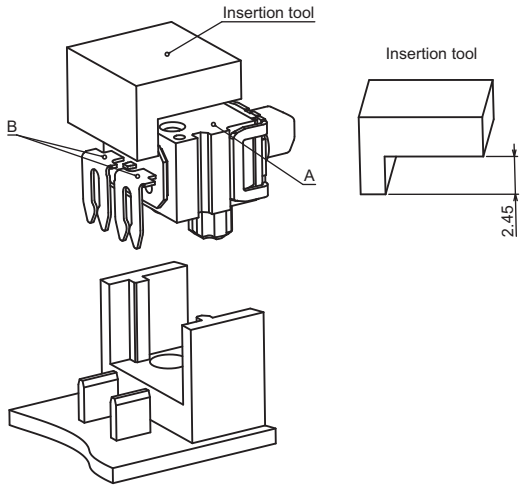

Operating Body

- Use an operating body with low frictional resistance, such as POM. Please do not use metal as operating body, and of a shape that will not interfere with the sealing rubber, otherwise the plunger may be damaged or the sealing may deteriorate.

ESD

- Static electricity adversely affects the chip resistor inside. For this reason, adopt sufficient electrostatic discharge measures when handling the Switch. Also, take sufficient consideration in the handling of the Switch and its packaging and transportation container.

Handling

- Do not handle the Switch in a way that may cause damage to the sealing rubber.
- When handling the Switch, ensure that pressure is not applied to the Pin plunger, Posts and Terminal in the directions shown in the following diagram. Otherwise, Switch may be damaged, or be reduced performance.

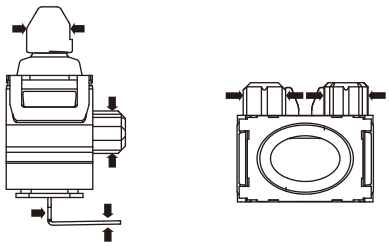

Wiring Molded Lead Wire Models

- When wiring molded lead wire models, ensure that there is no weight applied on the wire or that there are no sharp bends near the parts where the wire is drawn out. Otherwise, damage to the Switch or deterioration in the sealing may result.

Using Micro Loads

- Even when using micro load models within the specification range, if inrush/surge current occurs, it may increase the contact wear and so decrease durability. Therefore, insert a contact protection circuit where necessary.

Downloaded from Arrow.com.

Please check each region's Terms & Conditions by region website.

OMRON Corporation
Device & Module Solutions Company

Regional Contact

Americas
https://components.omron.com/us

Europe
https://components.omron.com/eu

Asia-Pacific
https://components.omron.com/ap

China
https://components.omron.com.cn

Korea
https://components.omron.com/kr

Japan
https://components.omron.com/jp

© OMRON Corporation 2024-2025 All Rights Reserved.
In the interest of product improvement, specifications are subject to change without notice.

Cat. No. B155-E1-03
0925 (1224)

Downloaded from Arrow.com.