REVISIONS		
LTR	DESCRIPTION	DATE
B	REVISED PER ECO-11-009061	05/02/2011

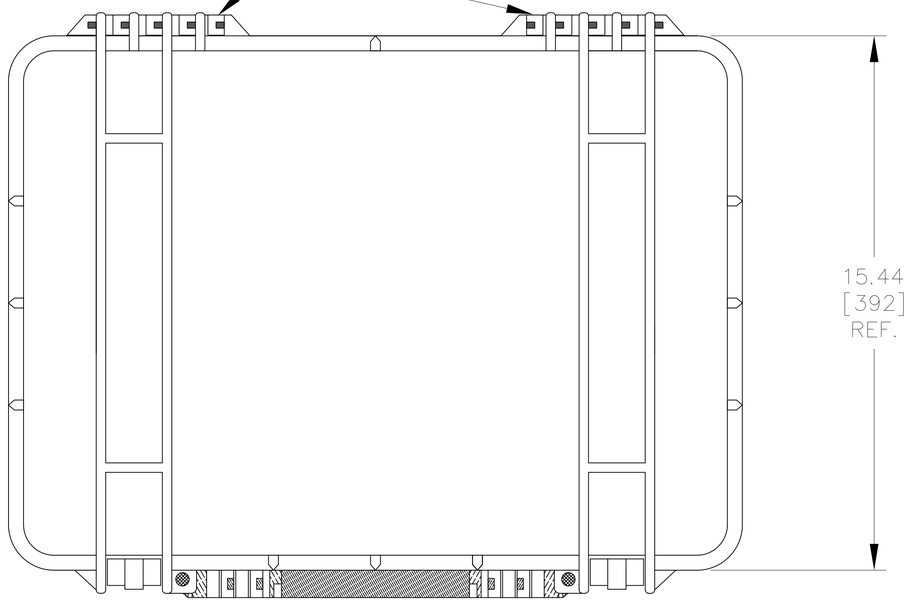

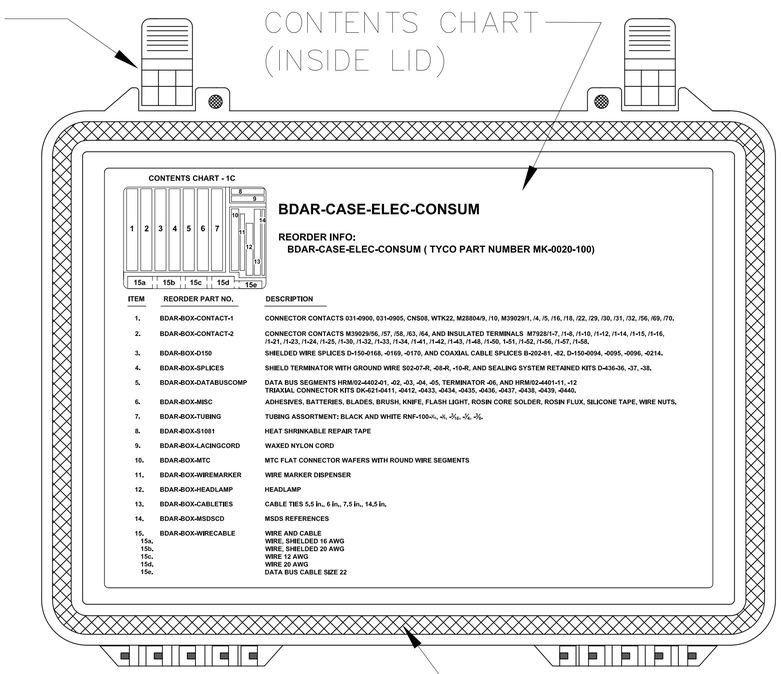

ITEM	REORDER PART NO.	DESCRIPTION
1.	BDAR-BOX-CONTACT-1	CONNECTOR CONTACTS 031-0900, 031-0905, CNS08, WTK22, M28804/9, /10, M39029/1, /4, /5, /16, /18, /22, /29, /30, /31, /32, /56, /69, /70.
2.	BDAR-BOX-CONTACT-2	CONNECTOR CONTACTS M39029/56, /57, /58, /63, /64, AND INSULATED TERMINALS M7928/1-7, /1-8, /1-10, /1-12, /1-14, /1-15, /1-16, /1-21, /1-23, /1-24, /1-25, /1-30, /1-32, /1-33, /1-34, /1-41, /1-42, /1-43, /1-48, /1-50, 1-51, /1-52, /1-56, /1-57, /1-58.
3.	BDAR-BOX-D150	SHIELDED WIRE SPLICES D-150-0168, -0169, -0170, AND COAXIAL CABLE SPLICES B-202-81, -82, D-150-0094, -0095, -0096, -0214.
4.	BDAR-BOX-SPLICES	SHIELD TERMINATOR WITH GROUND WIRE S02-07-R, -08-R, -10-R, AND SEALING SYSTEM RETAINED KITS D-436-36, -37, -38.
5.	BDAR-BOX-DATABUSCOMP	DATA BUS SEGMENTS HRM/02-4402-01, -02, -03, -04, -05, TERMINATOR -06, AND HRM/02-4401-11, -12 TRIAXIAL CONNECTOR KITS DK-621-0411, -0412, -0433, -0434, -0435, -0436, -0437, -0438, -0439, -0440.
6.	BDAR-BOX-MISC	ADHESIVES, BATTERIES, BLADES, BRUSH, KNIFE, FLASH LIGHT, ROSIN CORE SOLDER, ROSIN FLUX, SILICONE TAPE, WIRE NUTS.
7.	BDAR-BOX-TUBING	TUBING ASSORTMENT: BLACK AND WHITE RNF-100-¼, -⅛, -3/16, -½, -¾.
8.	BDAR-BOX-S1081	HEAT SHRINKABLE REPAIR TAPE
9.	BDAR-BOX-LACINGCORD	WAXED NYLON CORD
10.	BDAR-BOX-MTC	MTC FLAT CONNECTOR WAFERS WITH ROUND WIRE SEGMENTS
11.	BDAR-BOX-WIREMARKER	WIRE MARKER DISPENSER
12.	BDAR-BOX-HEADLAMP	HEADLAMP
13.	BDAR-BOX-CABLETIES	CABLE TIES 5.5 in., 6 in., 7.5 in., 14.5 in.
14.	BDAR-BOX-MSDSCD	MSDS REFERENCES
15.	BDAR-BOX-WIRECABLE	WIRE AND CABLE
15a.		WIRE, SHIELDED 16 AWG
15b.		WIRE, SHIELDED 20 AWG
15c.		WIRE 12 AWG
15d.		WIRE 20 AWG
15e.		DATA BUS CABLE SIZE 22

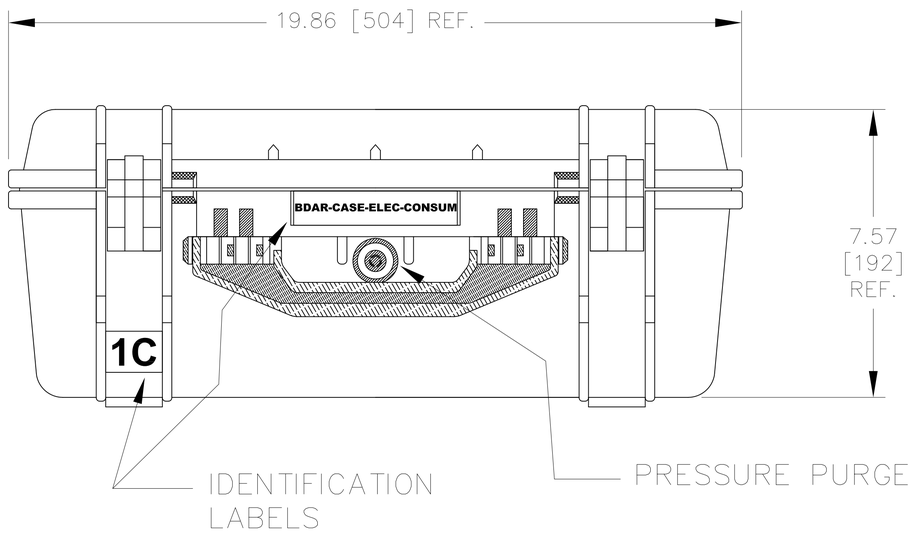

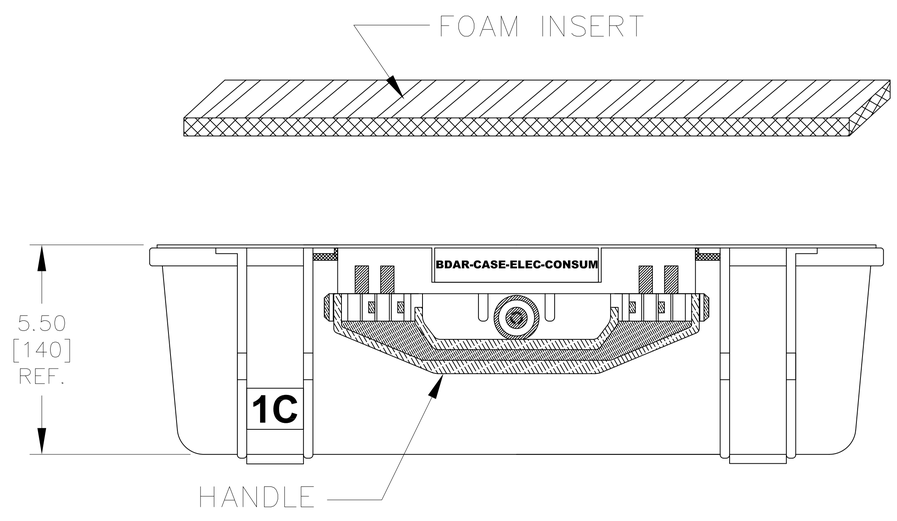

Raychem Devices
CUSTOMER DRAWING

TYCO ELECTRONICS CORPORATION RESERVES THE RIGHT TO AMEND THIS DRAWING AT ANY TIME. USERS SHOULD EVALUATE THE SUITABILITY OF THE PRODUCT FOR THEIR APPLICATION.

UNLESS OTHERWISE SPECIFIED DIMENSIONS ARE IN INCHES. METRIC DIMENSIONS ARE IN BRACKETS.
DECIMAL TOLERANCES
DEC .XXX ± 0.005
DEC .XX ± 0.01
DEC .X ± 0.1
ANGLE TOLERANCE
ANGLE ± 1°

DRAWN U. NGUYEN DATE 05/02/2011
ECO NUMBER ECO-11-009061
RPN: A35141-000
THIRD ANGLE PROJECTION

TE Connectivity

TITLE
BDAR-CASE-ELEC-CONSUM

SIZE	CODE IDENT. NO.	DWG. NO.
D	06090	MK-0020-100

SCALE: NTS | DO NOT SCALE THIS DRAWING | SHEET 1 OF 2

SHEET 1
DWG NO. MK-0020-100

If this document is printed it becomes uncontrolled. Check for the latest revision

© 2005-2011 Tyco Electronics Corporation. All rights reserved.

NOTES:

1. CASE INFO: PELICAN™ (*)1520, WATERTIGHT, O-RING SEAL, CRUSHPROOF...

2. ITEMS 1 THROUGH 15, REFER TO PARTS LIST FOR COMPONENTS INFO.

3. MOST ITEMS SHALL BE PACKAGED IN BOXES OR BAGS FOR IDENTIFICATION.

(*) PELICAN IS A TRADEMARK OF PELICAN PRODUCTS.

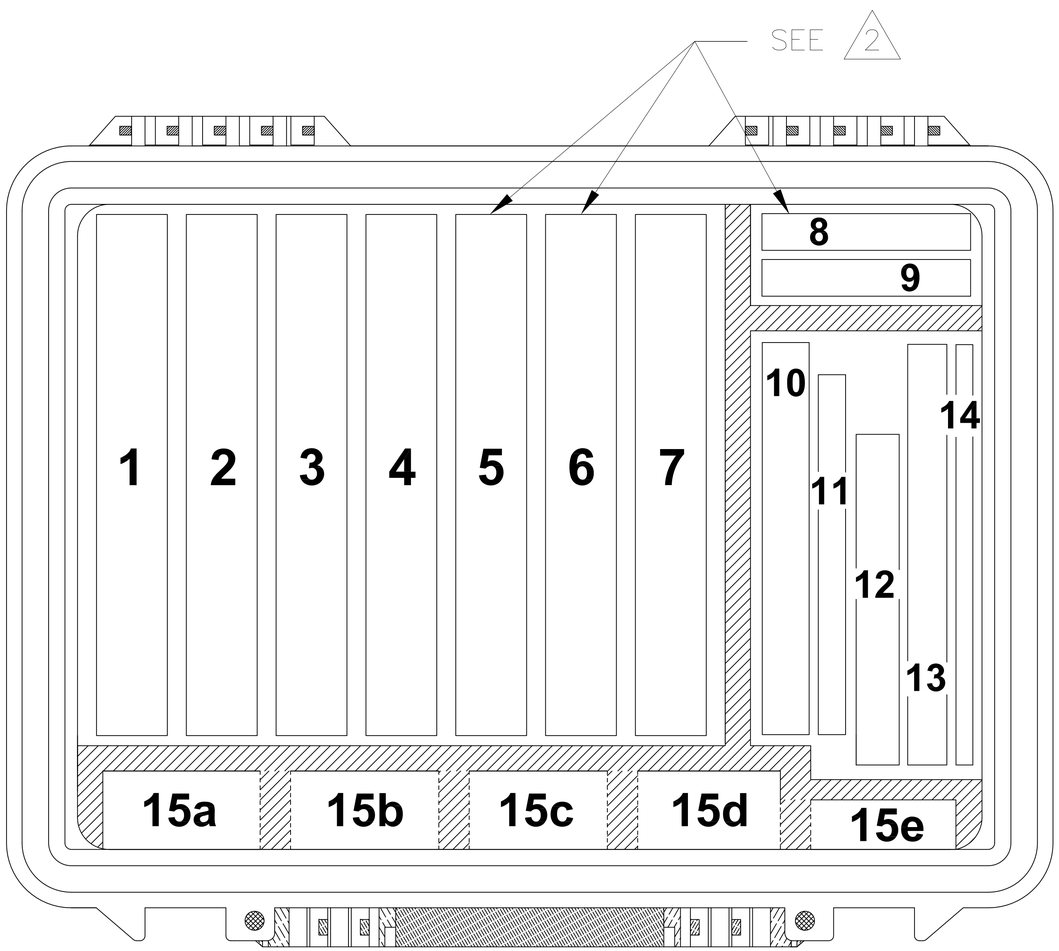

PARTS LIST

ITEM	TYCO ELECTRONICS PART DESCRIPTION	CUSTOMER PART DESCRIPTION	QTY.	DESCRIPTION
1	MK-0020-101-CONTACT1	BDAR-BOX-CONTACT-1	1 EA	CONNECTOR CONTACTS 031-0900, 031-0905, CNS08, WTK22, M28804/9, /10, M39029/1, /4, /5, /16, /18, M39029/22, /29, /30, /31, /32, /56, /69, /70.
2	MK-0020-102-CONTACT2	BDAR-BOX-CONTACT-2	1 EA	CONNECTOR CONTACTS M39029/56, /57, /58, /63, /64 AND TERMINAL LUGS M7928/1-7, -8, -10, -12, -14, -15, -16, -21, -23, -24, -25, -30, -32, -33, -34, -41, -42, -43, -48, -50, -51, -52, -56. -57, -58.
3	MK-0020-103-D150	BDAR-BOX-D150	1 EA	SHIELDED WIRE SPLICES D-150-0168, -0169, -0170 AND COAXIAL CABLE SPLICES B-202-81, -82, D-150-0094, -0095, -0096, -0214.
4	MK-0020-104-SPLICES	BDAR-BOX-SPLICES	1 EA	SHIELD TERMINATOR WITH GROUND WIRE S02-07-R, -08-R, -10-R, SEALING SYSTEM RETAINED KIT D-436-36,-37,-38.
5	MK-0020-105-DATABUS	BDAR-BOX-DATABUSCOMP	1 EA	DATA BUS SEGMENTS D-600-0107, -0108, -0109, -0110, -0111, -0112, -0113, DATA BUS TERMINATOR -0119, TRIAXIAL CONNECTORS DK-621-0411,-0412, -0433, -0434, -0435, -0436, -0437, -0438, -0439, -0440.
6	MK-0020-106-MISC	BDAR-BOX-MISC	1 EA	ADHESIVES, BATTERIES, BLADES, BRUSH, FLUX, KNIFE, MITYLITE, ROSIN CORE SOLDER, SILICONE TAPE AND WIRE NUTS
7	MK-0020-107-TUBING	BDAR-BOX-TUBING	1 EA	TUBING ASSORTMENT: RNF-100 TUBING SIZES $\frac{1}{16}$, $\frac{1}{4}$, $\frac{1}{8}$, $\frac{3}{16}$, $\frac{3}{8}$
8	MK-0020-110-S1081	BDAR-BOX-S1081	1 EA	HARNESS REPAIR TAPE
9	MK-0020-112-LACINGCORD	BDAR-BOX-LACINGCORD	1 EA	WAXED NYLON CORD
10	MK-0020-108-MTC	BDAR-BOX-MTC	1 EA	MTC FLAT CONNECTOR WAFERS WITH ROUND WIRE SEGMENTS
11	MK-0020-109-WIREMARKER	BDAR-BOX-WIREMARKER	1 EA	WIRE MARKER DISPENSER
12	MK-0020-114-HEADLAMP	BDAR-BOX-HEADLAMP	1 EA	HEADLAMP
13	MK-0020-116-CABLETIES	BDAR-BOX-CABLETIES	1 EA	CABLE TIES ASSORTMENT: 5.6in, 6.2in, 7.4in, 14.5in.
14	MK-0020-115-MSDSCD	BDAR-BOX-MSDSCD	1 EA	MSDS REFERENCES
15	MK-0020-109-WIRECABLE	BDAR-BOX-WIRECABLE	1 EA	WIRE AND DATA BUS CABLE
15a	55A1812-16-9-9	M27500-16SP-1-S23	50 FT.	WIRE, SHIELDED 16 AWG
15b	55A1812-20-9-9	M27500-20SP-1-S23	100 FT.	WIRE, SHIELDED 20 AWG
15c	22759/43-12-9	M22759/43-12-9	30 FT.	WIRE 12 AWG
15d	22759/43-20-9	M22759/43-20-9	150 FT.	WIRE 20 AWG
15e	10605-22-9	PART OF HRM/01-0401	11.5 FT.	DATA BUS CABLE SIZE 22

If this document is printed it becomes uncontrolled. Check for the latest revision

Raychem Devices

CUSTOMER DRAWING

SIZE	CODE IDENT. NO.	REV	DWG. NO.
D	06090	B	MK-0020-100

SCALE: NTS | DO NOT SCALE THIS DRAWING | SHEET 2 OF 2

SHEET 2

DWG NO. MK-0020-100