IRFB4110PbF

$V_{(BR)DSS}$	100V
$R_{DS(on)}$ typ.	3.7mΩ
max.	4.5mΩ
$I_{D\ (Silicon\ Limited)}$	180A①
$I_{D\ (Package\ Limited)}$	120A

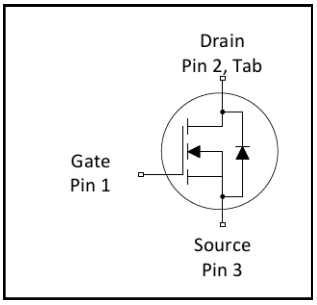

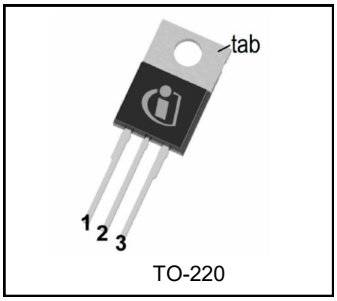

G	D	S
Gate	Drain	Source

Applications

- High Efficiency Synchronous Rectification in SMPS
- Uninterruptible Power Supply
- High Speed Power Switching
- Hard Switched and High Frequency Circuits

Benefits

- Improved Gate, Avalanche and Dynamic dv/dt Ruggedness
- Fully Characterized Capacitance and Avalanche SOA
- Enhanced body diode dV/dt and dI/dt Capability
- Lead Free
- RoHS Compliant, Halogen-Free

Base part number	Package Type	Standard Pack		Orderable Part Number
		Form	Quantity	
IRFB4110PbF	TO-220	Tube	50	IRFB4110PbF

Absolute Maximum Ratings

Symbol	Parameter	Max.	Units
I_D @ T_C = 25°C	Continuous Drain Current, V_{GS} @ 10V (Silicon Limited)	180①	A
I_D @ T_C = 100°C	Continuous Drain Current, V_{GS} @ 10V (Silicon Limited)	130①	
I_D @ T_C = 25°C	Continuous Drain Current, V_{GS} @ 10V (Wire Bond Limited)	120	
I_{DM}	Pulsed Drain Current ②	670	
P_D @T_C = 25°C	Maximum Power Dissipation	370	W
	Linear Derating Factor	2.5	W/°C
V_{GS}	Gate-to-Source Voltage	± 20	V
dv/dt	Peak Diode Recovery ④	5.3	V/ns
T_J T_{STG}	Operating Junction and Storage Temperature Range	-55 to + 175	°C
	Soldering Temperature, for 10 seconds (1.6mm from case)	300	
	Mounting torque, 6-32 or M3 screw	10 lbf•in (1.1N•m)	

Avalanche Characteristics

E_{AS}	Single Pulse Avalanche Energy (Thermally Limited) ③	190	mJ
I_{AR}	Avalanche Current ②	See Fig.14,15, 22a, 22b	A
E_{AR}	Repetitive Avalanche Energy ⑤		mJ

Thermal Resistance

Symbol	Parameter	Typ.	Max.	Units
$R_{\theta JC}$	Junction-to-Case ⑨	——	0.402	°C/W
$R_{\theta CS}$	Case-to-Sink, Flat, Greased Surface	0.50	——	
$R_{\theta JA}$	Junction-to-Ambient ⑧⑨	——	62	

Downloaded from Arrow.com.

Static @ T_J = 25°C (unless otherwise specified)

	Parameter	Min.	Typ.	Max.	Units	Conditions
$V_{(BR)DSS}$	Drain-to-Source Breakdown Voltage	100	——	——	V	V_{GS} = 0V, I_D = 250μA
$\Delta V_{(BR)DSS}/\Delta T_J$	Breakdown Voltage Temp. Coefficient	——	0.108	——	V/°C	Reference to 25°C, I_D = 5mA ②
$R_{DS(on)}$	Static Drain-to-Source On-Resistance	——	3.7	4.5	mΩ	V_{GS} = 10V, I_D = 75A ⑤
$V_{GS(th)}$	Gate Threshold Voltage	2.0	——	4.0	V	V_{DS} = V_{GS}, I_D = 250μA
I_{DSS}	Drain-to-Source Leakage Current	——	——	20	μA	V_{DS} = 100V, V_{GS} = 0V
		——	——	250		V_{DS} = 100V,V_{GS} = 0V,T_J =125°C
I_{GSS}	Gate-to-Source Forward Leakage	——	——	100	nA	V_{GS} = 20V
	Gate-to-Source Reverse Leakage	——	——	-100		V_{GS} = -20V
R_G	Gate Resistance	——	1.3	——	Ω	

Dynamic Electrical Characteristics @ T_J = 25°C (unless otherwise specified)

gfs	Forward Trans conductance	160	——	——	S	V_{DS} = 50V, I_D = 75A
Q_g	Total Gate Charge	——	150	210	nC	I_D = 75A
Q_{gs}	Gate-to-Source Charge	——	35	——		V_{DS} = 50V
Q_{gd}	Gate-to-Drain Charge	——	43	——		V_{GS} = 10V⑤
$t_{d(on)}$	Turn-On Delay Time	——	25	——	ns	V_{DD} = 65V
t_r	Rise Time	——	67	——		I_D = 75A
$t_{d(off)}$	Turn-Off Delay Time	——	78	——		R_G= 2.6Ω
t_f	Fall Time	——	88	——		V_{GS} = 10V⑤
C_{iss}	Input Capacitance	——	9620	——	pF	V_{GS} = 0V
C_{oss}	Output Capacitance	——	670	——		V_{DS} = 50V
C_{rss}	Reverse Transfer Capacitance	——	250	——		f = 1.0MHz, See Fig. 5
$C_{oss\ eff.(ER)}$	Effective Output Capacitance (Energy Related)	——	820	——		V_{GS} = 0V, V_{DS} = 0V to 80V⑦
$C_{oss\ eff.(TR)}$	Effective Output Capacitance (Time Related)	——	950	——		V_{GS} = 0V, V_{DS} = 0V to 80V⑥

Diode Characteristics

	Parameter	Min.	Typ.	Max.	Units	Conditions
I_S	Continuous Source Current (Body Diode)	——	——	170①	A	MOSFET symbol showing the integral reverse p-n junction diode. 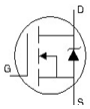
I_{SM}	Pulsed Source Current (Body Diode) ②	——	——	670		
V_{SD}	Diode Forward Voltage	——	——	1.3	V	T_J = 25°C,I_S = 75A,V_{GS} = 0V ⑤
t_{rr}	Reverse Recovery Time	——	50	75	ns	T_J = 25°C; V_{DD} = 85V
		——	60	90		T_J = 125°C; I_F = 75A,
Q_{rr}	Reverse Recovery Charge	——	94	140	nC	T_J = 25°C; di/dt = 100A/μs ⑤
		——	140	210		T_J = 125°C
I_{RRM}	Reverse Recovery Current	——	3.5	——	A	T_J = 25°C

Notes:

① Calculated continuous current based on maximum allowable junction temperature. Bond wire current limit is 120A. Note that current limitations arising from heating of the device leads may occur with some lead mounting arrangements.

② Repetitive rating; pulse width limited by max. junction temperature.

③ Limited by $T_{Jmax,}$ starting T_J = 25°C, L = 0.033mH, R_G = 25Ω, I_{AS} = 108A, V_{GS} =10V. Part not recommended for use above this value.

④ $I_{SD} \leq$ 75A, di/dt $\leq$ 630A/μs, $V_{DD} \leq V_{(BR)DSS}$, $T_J \leq$ 175°C.

⑤ Pulse width $\leq$ 400μs; duty cycle $\leq$ 2%.

⑥ C_{oss} eff. (TR) is a fixed capacitance that gives the same charging time as C_{oss} while V_{DS} is rising from 0 to 80% V_{DSS}.

⑦ C_{oss} eff. (ER) is a fixed capacitance that gives the same energy as C_{oss} while V_{DS} is rising from 0 to 80% V_{DSS}.

⑧ when mounted on 1" square PCB (FR-4 or G-10 Material). For recommended footprint and soldering techniques refer to application note# AN-994.

⑨ R_θ is measured at T_J approximately 90°C.

Downloaded from Arrow.com.

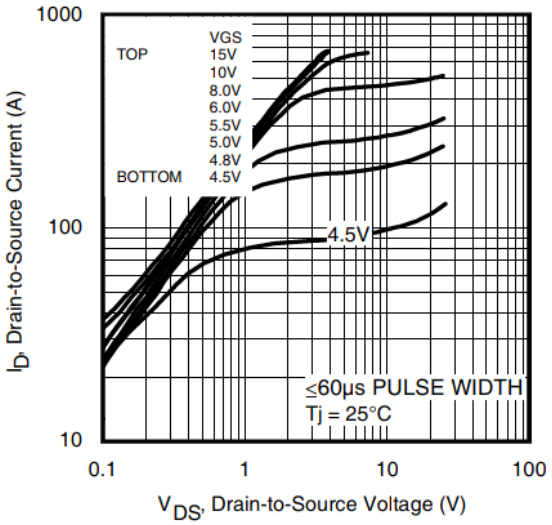

Fig. 1 Typical Output Characteristics

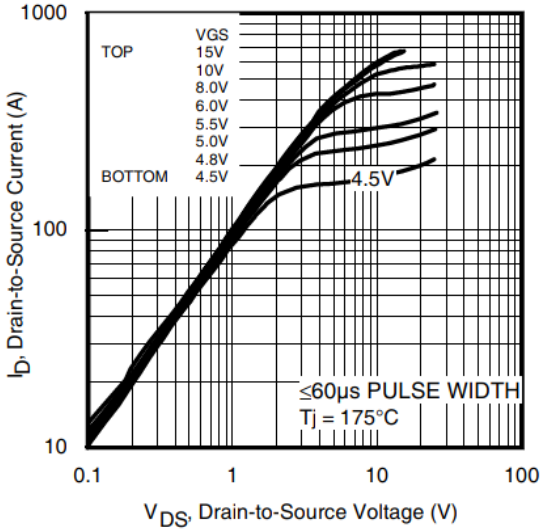

Fig. 2 Typical Output Characteristics

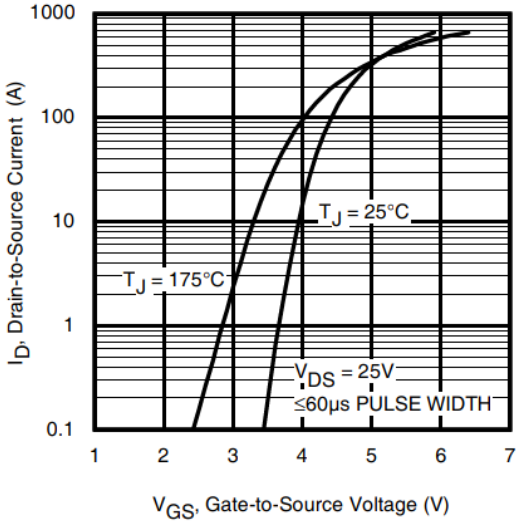

Fig. 3 Typical Transfer Characteristics

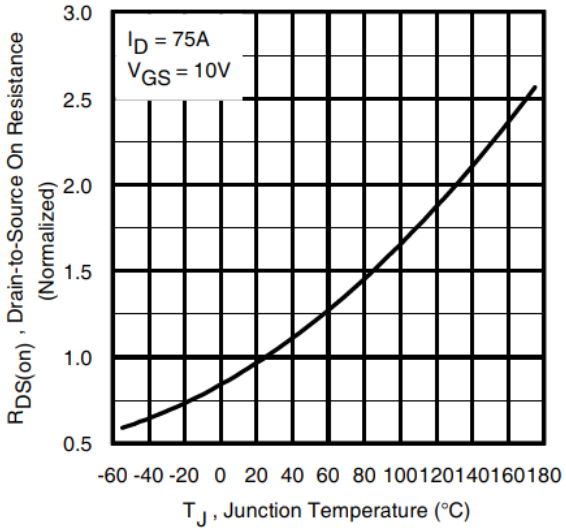

Fig. 4 Normalized On-Resistance vs. Temperature

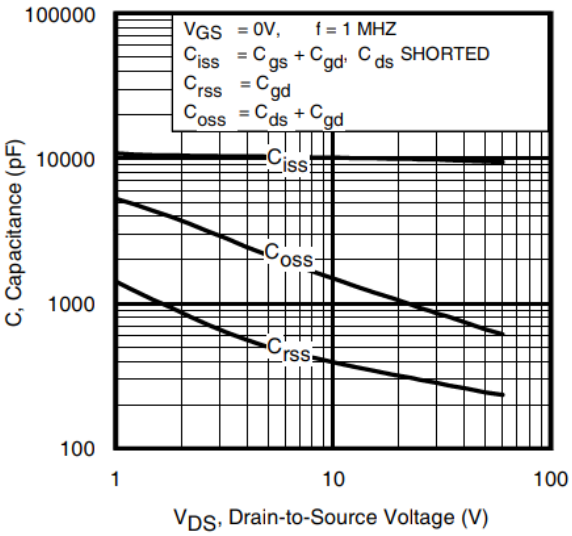

Fig 5. Typical Capacitance vs. Drain-to-Source Voltage

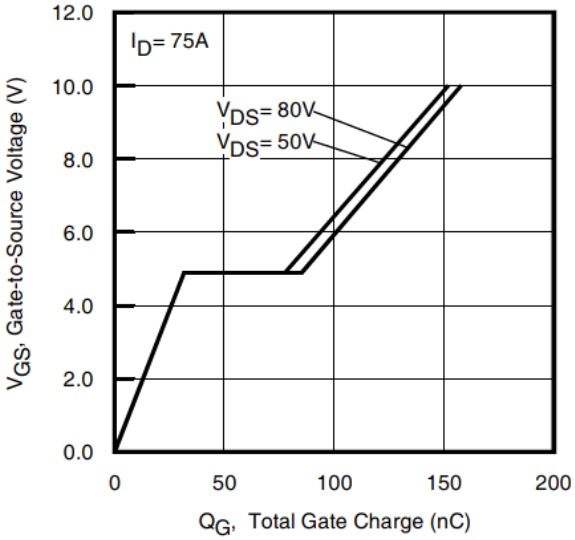

Fig 6. Typical Gate Charge vs. Gate-to-Source Voltage

Downloaded from Arrow.com.

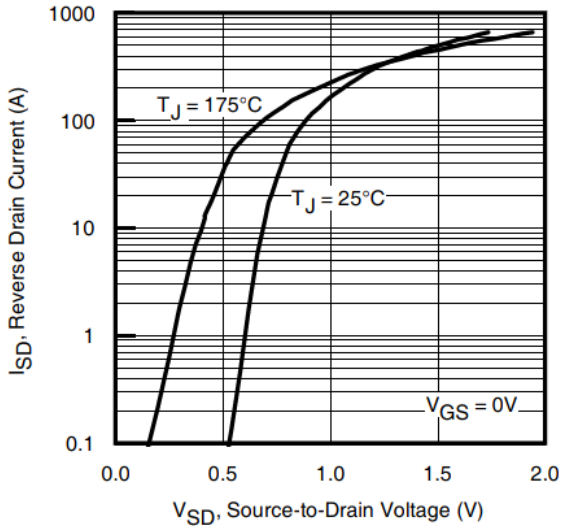

Fig. 7 Typical Source-to-Drain Diode

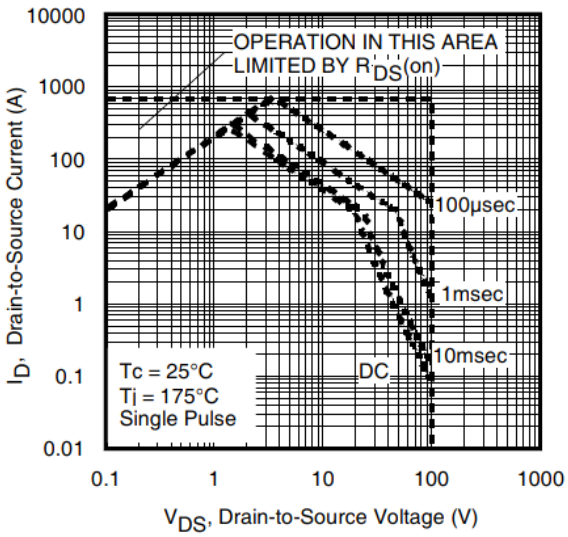

Fig 8. Maximum Safe Operating Area

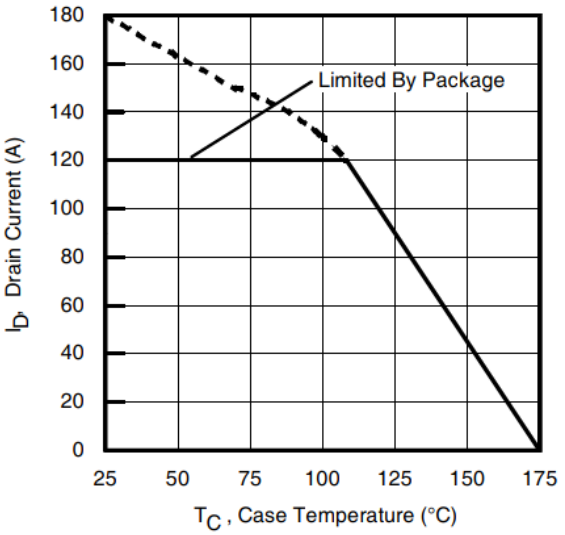

Fig 9. Maximum Drain Current vs. Case Temperature

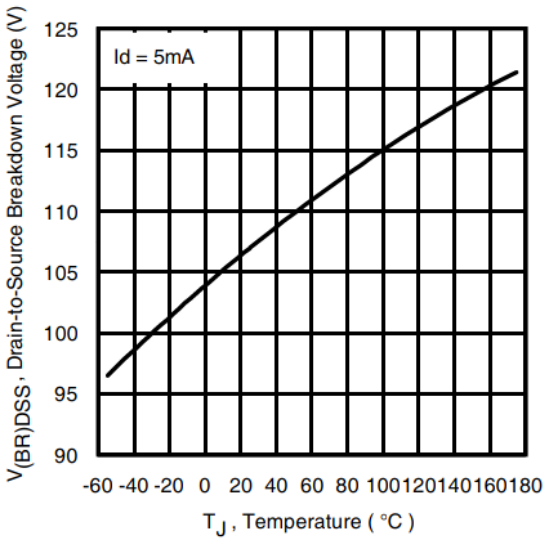

Fig 10. Drain-to-Source Breakdown Voltage

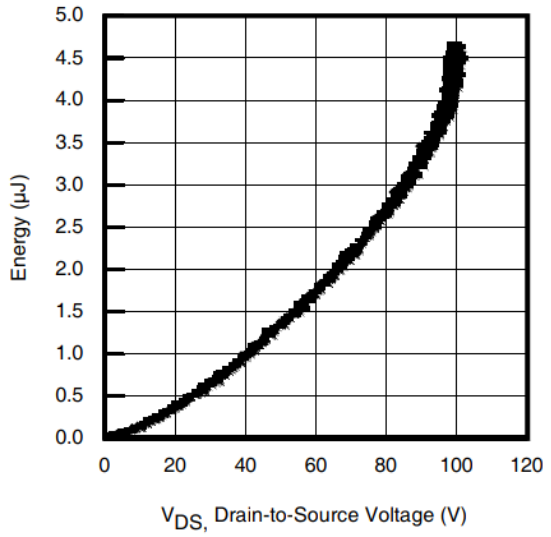

Fig 11. Typical Coss Stored Energy

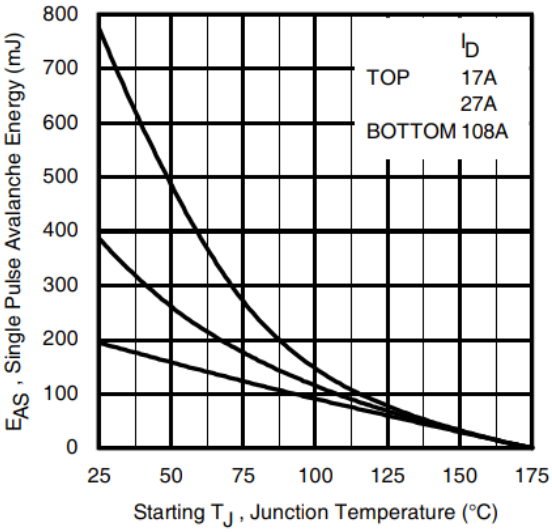

Fig 12. Maximum Avalanche Energy vs. Drain Current

Downloaded from Arrow.com.

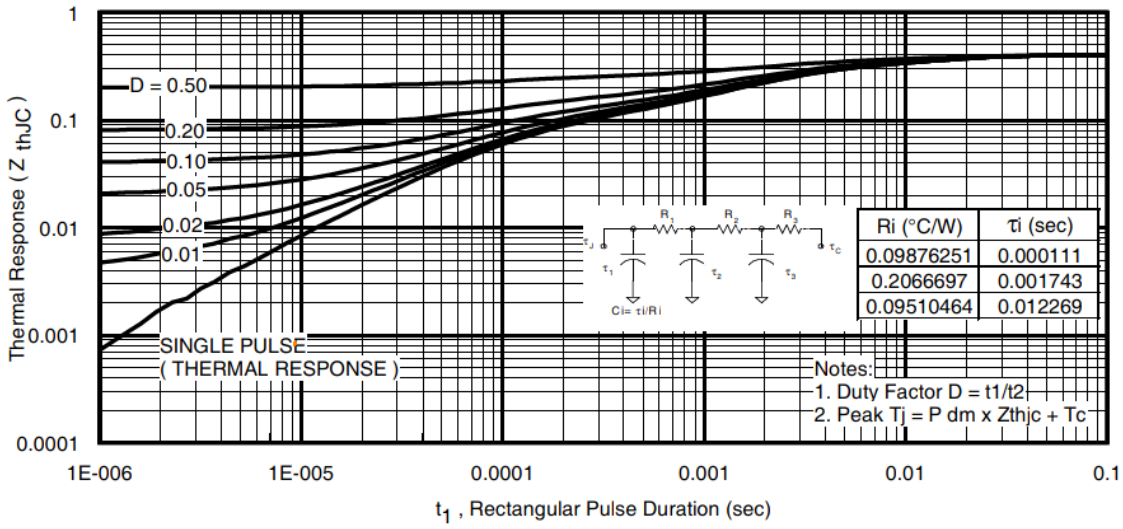

Fig 13. Maximum Effective Transient Thermal Impedance, Junction-to-Case

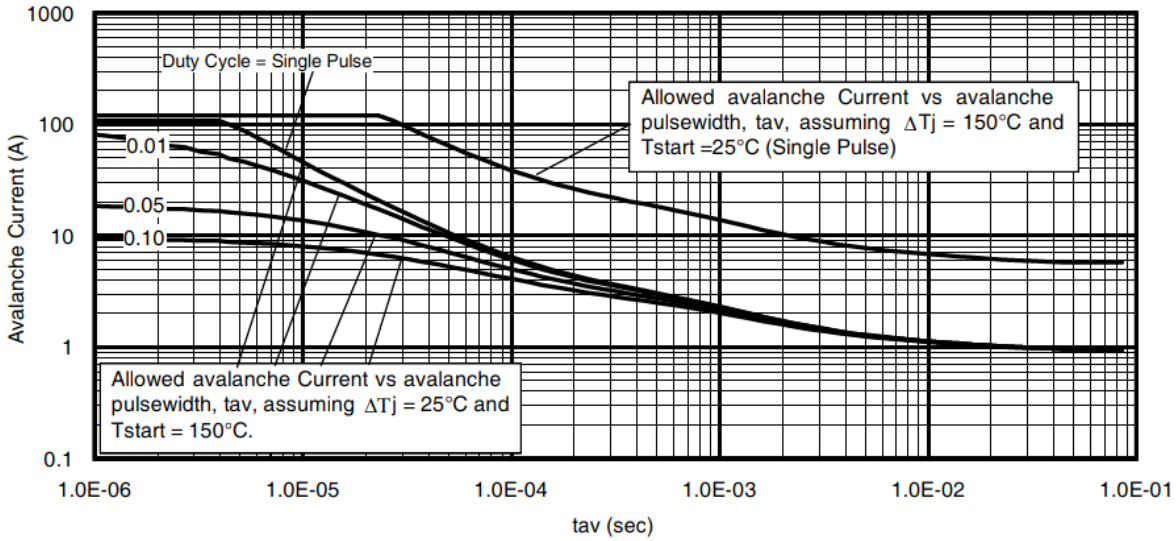

Fig 14. Avalanche Current vs. Pulse width

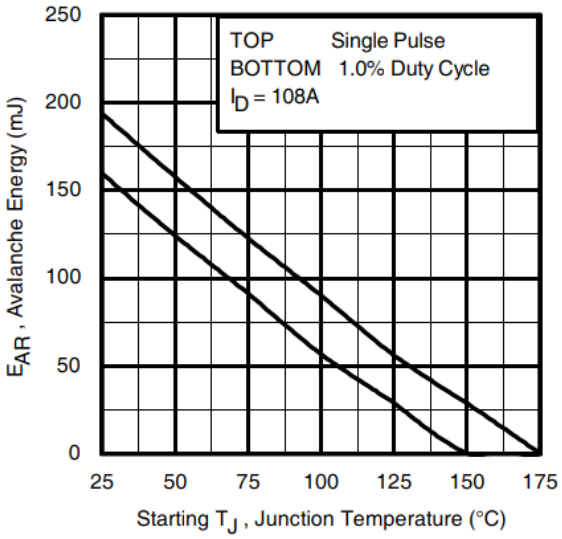

Notes on Repetitive Avalanche Curves , Figures 14, 15:
(For further info, see AN-1005 at www.infineon.com)

1. Avalanche failures assumption:
   Purely a thermal phenomenon and failure occurs at a temperature far in excess of T_{jmax}. This is validated for every part type.
2. Safe operation in Avalanche is allowed as long as T_{jmax} is not exceeded.
3. Equation below based on circuit and waveforms shown in Figures 18a, 18b.
4. $P_{D\ (ave)}$ = Average power dissipation per single avalanche pulse.
5. BV = Rated breakdown voltage (1.3 factor accounts for voltage increase during avalanche).
6. I_{av} = Allowable avalanche current.
7. ΔT = Allowable rise in junction temperature, not to exceed T_{jmax} (assumed as 25°C in Figure 13, 14).
   t_{av} = Average time in avalanche.
   D = Duty cycle in avalanche = $t_{av} \cdot f$
   $Z_{thJC}(D, t_{av})$ = Transient thermal resistance, see Figures 13)

$$P_{D\ (ave)} = 1/2\ (1.3 \cdot BV \cdot I_{av}) = \Delta T / Z_{thJC}$$

$$I_{av} = 2\Delta T / [1.3 \cdot BV \cdot Z_{th}]$$

$$E_{AS\ (AR)} = P_{D\ (ave)} \cdot t_{av}$$

Fig 15. Maximum Avalanche Energy vs. Temperature

Downloaded from Arrow.com.

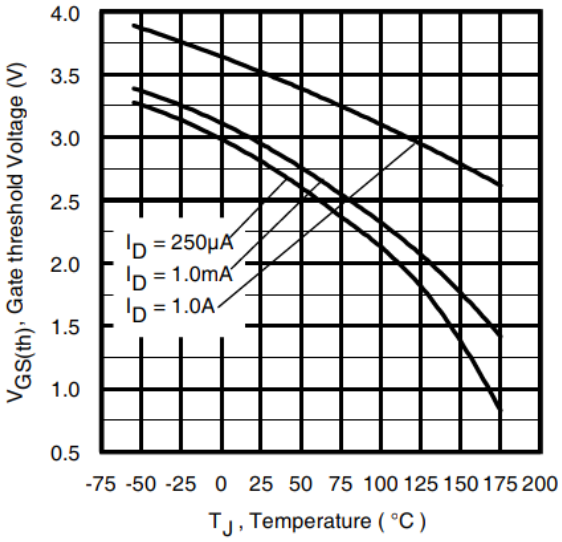

Fig 16. Threshold Voltage vs. Temperature

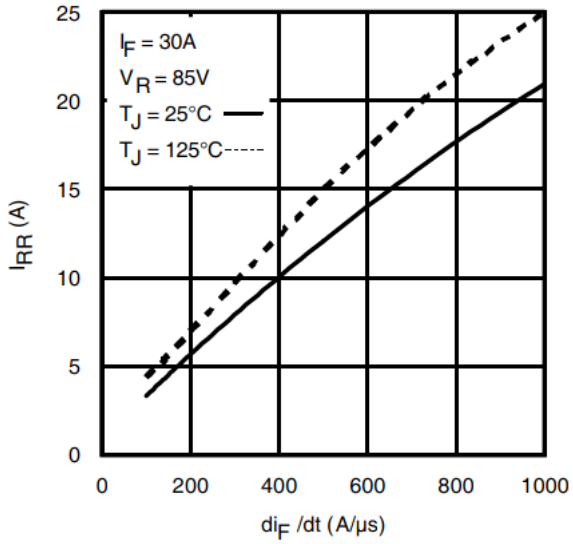

Fig. 17 - Typical Recovery Current vs. di_f/dt

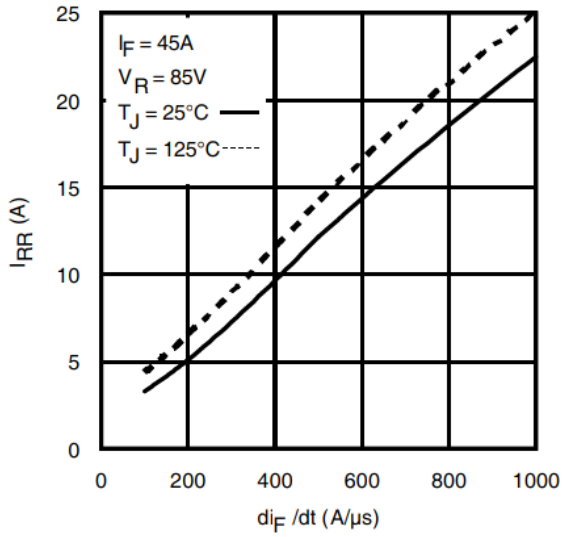

Fig. 18 - Typical Recovery Current vs. di_f/dt

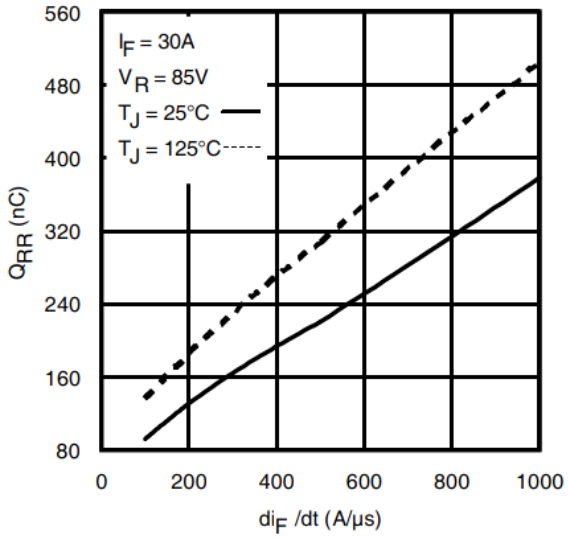

Fig. 19 - Typical Stored Charge vs. di_f/dt

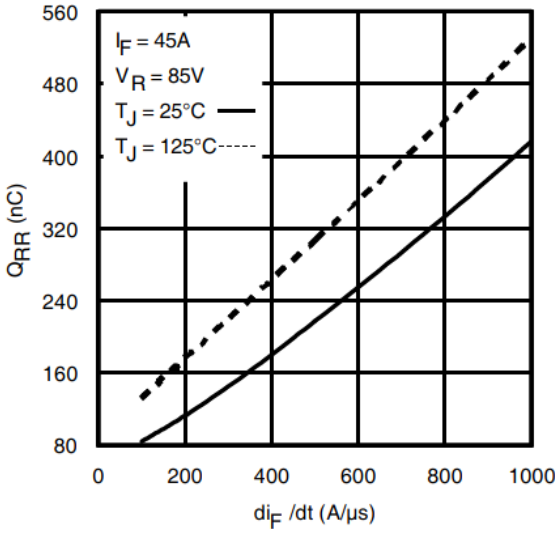

Fig. 20 - Typical Stored Charge vs. di_f/dt

Downloaded from Arrow.com.

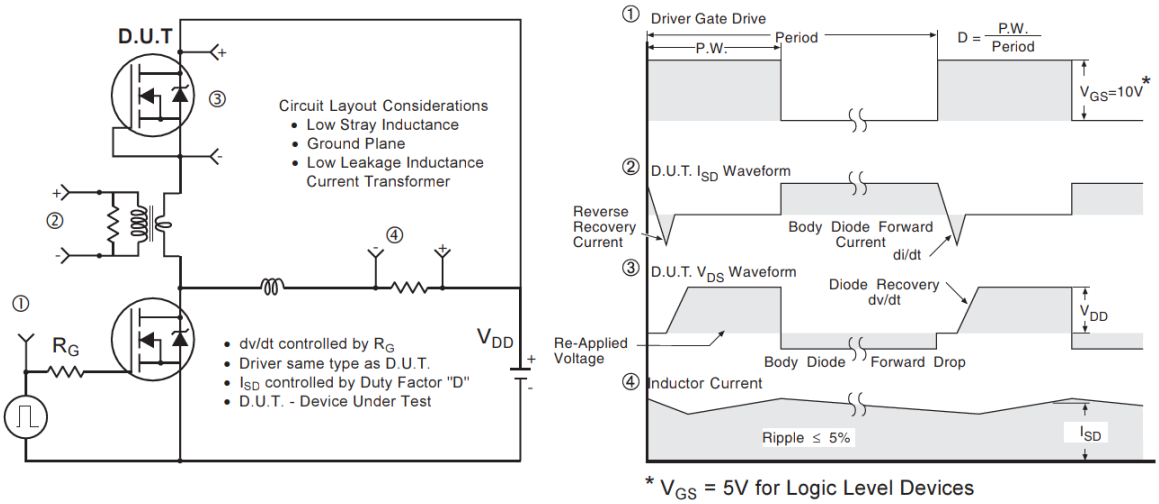

Fig 21. Peak Diode Recovery dv/dt Test Circuit for N-Channel HEXFET® Power MOSFETs

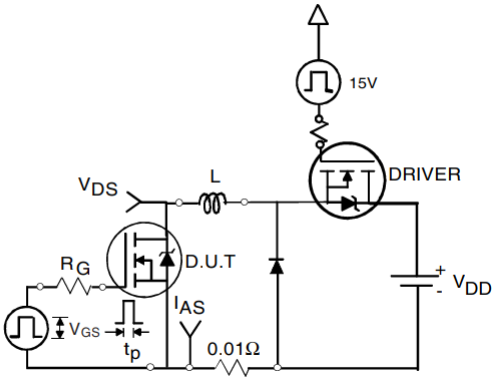

Fig 22a. Unclamped Inductive Test Circuit

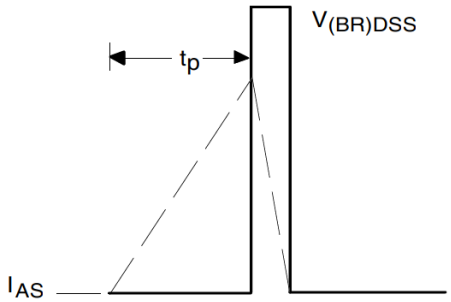

Fig 22b. Unclamped Inductive Waveforms

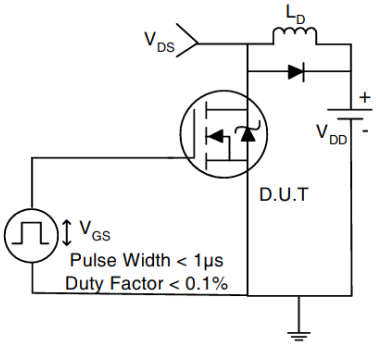

Fig 23a. Switching Time Test Circuit

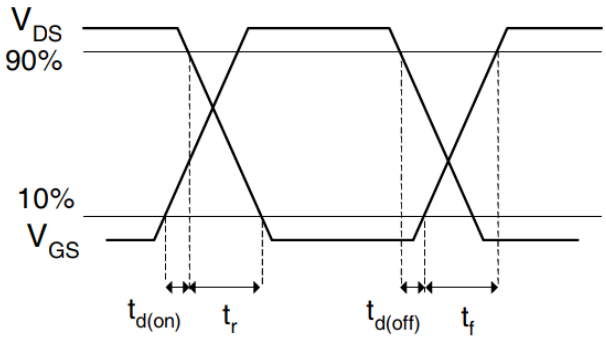

Fig 23b. Switching Time Waveforms

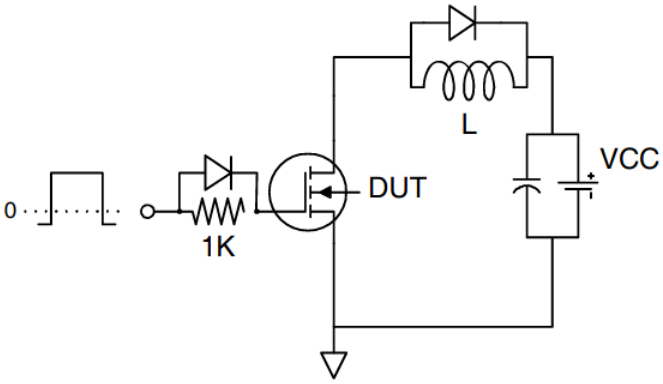

Fig 24a. Gate Charge Test Circuit

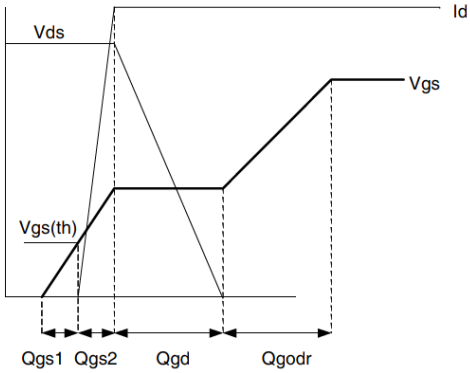

Fig 24b. Gate Charge Waveform

Downloaded from Arrow.com.

TO-220 Package Outline (Dimensions are shown in millimeters (inches))

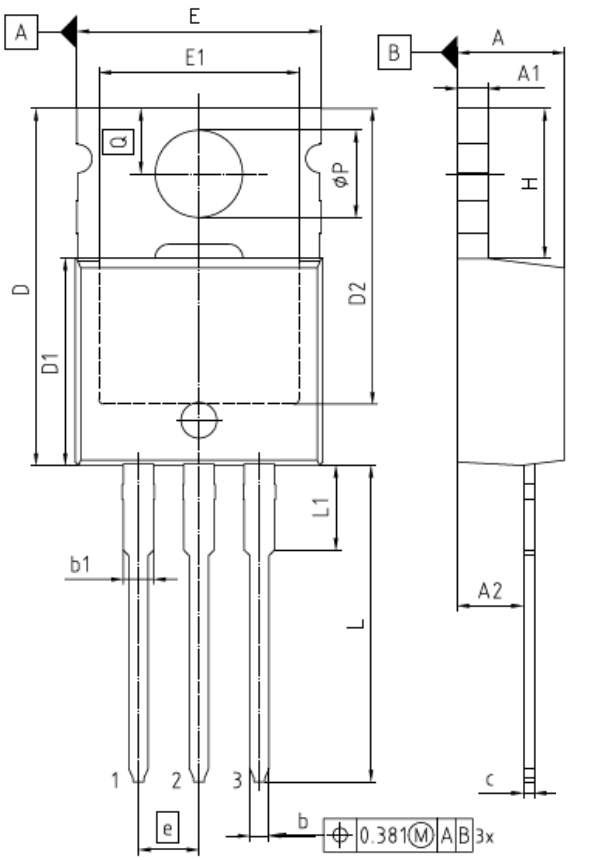

NOTES:
DIMENSIONS DO NOT INCLUDE MOLD FLASH, PROTRUSION OR GATE BURRS
GATE BURRS ARE LESS THAN 0.5 mm

PACKAGE - GROUP NUMBER:	PG-TO220-3-U05	
DIMENSIONS	MILLIMETERS	
	MIN.	MAX.
A	3.56	4.83
A1	1.14	1.40
A2	2.03	2.92
b	0.38	1.01
b1	1.14	1.78
c	0.36	0.61
D	14.22	16.51
D1	8.38	9.20
D2	11.68	12.88
E	9.65	10.67
E1	6.86	8.89
e	2.54	
N	3	
H	5.84	6.86
L	12.70	14.73
L1	3.56	4.06
øP	3.54	4.08
Q	2.54	3.42

TO-220 Part Marking Information

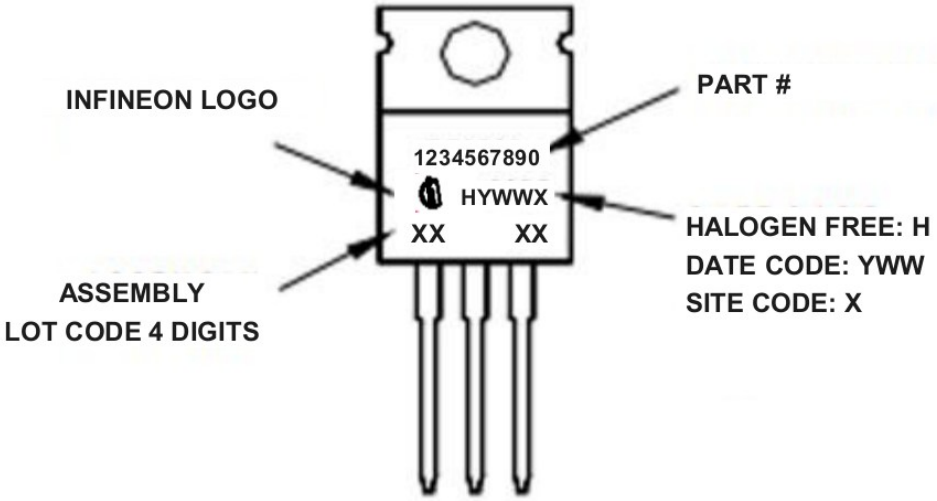

TO-220 packages are not recommended for Surface Mount Application.

Downloaded from Arrow.com.

Qualification Information†

Qualification Level	Industrial (per JEDEC JESD47F) ††	
Moisture Sensitivity Level	TO-220	N/A
RoHS Compliant	Yes	

† Qualification standards can be found at International Rectifier's web site: https://www.infineon.com/

†† Applicable version of JEDEC standard at the time of product release.

Revision History

Date	Rev.	Comments
2026-07-31	2.1	• Update datasheet to Infineon format • Updated Package Outline and Part marking –page 8 • Added disclaimer on last page.

Downloaded from Arrow.com.

Trademarks

All referenced product or service names and trademarks are the property of their respective owners.

Published by Infineon Technologies AG, Am Campeon 1-15, 85579 Neubiberg, Germany
Copyright (c) 2026 Infineon Technologies AG and its affiliates. All Rights Reserved.

Important notice

The product is not developed and released for series supply by Infineon.

Subject to the development and release of the product for series supply by Infineon, the technical specifications of the product are set forth in the relevant final product data sheet provided by Infineon.

Infineon reserves the right to change all information given in this document at any time without notice.

Products which may also include samples and may be comprised of hardware or software or both (“Product(s)”) are sold or provided and delivered by Infineon Technologies AG and its affiliates (“Infineon”) subject to the terms and conditions of the frame supply contract or other written agreement(s) executed by a customer and Infineon or, in the absence of the foregoing, the applicable Sales Conditions of Infineon. General terms and conditions of a customer or deviations from applicable Sales Conditions of Infineon shall only be binding for Infineon if and to the extent Infineon has given its express written consent.

For the avoidance of doubt, Infineon disclaims all warranties of non-infringement of third-party rights and implied warranties such as warranties of fitness for a specific use/purpose or merchantability.

Infineon shall not be responsible for any information with respect to samples, the application or customer’s specific use of any Product or for any examples or typical values given in this document.

The data contained in this document is exclusively intended for technically qualified and skilled customer representatives. It is the responsibility of the customer to evaluate the suitability of the Product for the intended application and the customer’s specific use and to verify all relevant technical data contained in this document in the intended application and the customer’s specific use. The customer is responsible for properly designing, programming, and testing the functionality and safety of the intended application, as well as complying with any legal requirements related to its use.

Unless otherwise explicitly approved by Infineon, Products may not be used in any application where a failure of the Products or any consequences of the use thereof can reasonably be expected to result in personal injury. However, the foregoing shall not

prevent the customer from using any Product in such fields of use that Infineon has explicitly designed and sold it for, provided that the overall responsibility for the application lies with the customer.

Infineon expressly reserves the right to use its content for commercial text and data mining (TDM) according to applicable laws, e.g. Section 44b of the German Copyright Act (UrhG).

If the Product includes security features: Because no computing device can be absolutely secure, and despite security measures implemented in the Product, Infineon does not guarantee that the Product will be free from intrusion, data theft or loss, or other breaches (“Security Breaches”), and Infineon shall have no liability arising out of any Security Breaches.

If this document includes or references software:

The software is owned by Infineon under the intellectual property laws and treaties of the United States, Germany, and other countries worldwide. All rights reserved. Therefore, you may use the software only as provided in the software license agreement accompanying the software. If no software license agreement applies, Infineon hereby grants you a personal, non-exclusive, non-transferable license (without the right to sublicense) under its intellectual property rights in the software (a) for software provided in source code form, to modify and reproduce the software solely for use with Infineon hardware products, only internally within your organization, and (b) to distribute the software in binary code form externally to end users, solely for use on Infineon hardware products. Any other use, reproduction, modification, translation, or compilation of the software is prohibited.

For further information on the Product, technology, delivery terms and conditions, and prices, please contact your nearest Infineon office or visit https://www.infineon.com.

Downloaded from Arrow.com.