Toroidal Suppression Core (2661828302)

Part No. 2661828302



Part Number	2661828302
Description	61 Toroidal Suppression Core
Part Type	Toroidal Suppression Core
Frequency Range	61 Material™
Application Type	Inductive Components
Where Used	Bare Core
Material Grade	61

ORDERING INFORMATION

Part Number: 2661828302

61 Toroidal Suppression Core

Explanation of Part Numbers:
– Digits 1 & 2 = Product Class
– Digits 3 & 4 = Material Grade
– Last digit 2 = Burnished (All cable cores have been burnished to remove the sharp edges)

Fair-Rite offers a broad selection of ferrite EMI suppression cable cores in several materials with guaranteed minimum impedance specifications.

For smaller suppression parts, refer to the section EMI Suppression Beads.

Our Expanded Cable and Suppressor Kit (part number 0199000005) contains a selection of these suppression cores.

For any cable suppression core not listed here, feel free to contact our customer service group for availability and pricing.

MECHANICAL SPECIFICATIONS

The C dimension may be modified to suit specific applications.

Weight: 181 (g)

Chart Legend
•Dimensions (Top numbers are in millimeters, bottom numbers are in nominal inches.).

Downloaded from Arrow.com.

Dim	mm	mm tol	nominal inch	inch misc.
A	61.00	±1.30	2.402	_
B	35.55	±0.85	1.40	_
C	20.00	+/-0.50	0.787	_

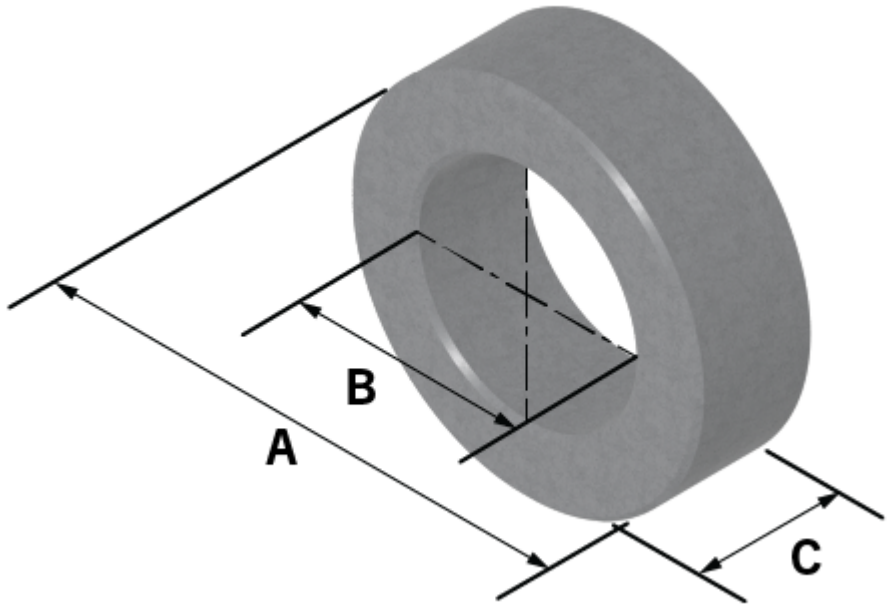

ELECTRICAL SPECIFICATIONS

Chart Legend
ΣI/A ： Core Constant, l_e : Effective Path Length, A_e : Effective Cross-Sectional Area, V_e : Effective Core Volume
A_L : Inductance Factor

Typical Impedance (Ω)	
100 MHz	150 Typ
250 MHz	262 Typ
500 MHz	480 Typ

Electrical Properties	
Ae(cm²)	0.248
le(cm)	1.44
Ve(cm³)	0.35

Downloaded from Arrow.com.

Fair-Rite Products Corp.
One Commercial Row, Wallkill, New York 12589-0288
888-324-7748 • 845-895-2055 • Fax: 845-895-2629 • ferrites@fair-rite.com •
www.fair-rite.com

This document was generated automatically from Fair-Rite's product database. For the most current specifications, visit **fair-rite.com**.

Downloaded from Arrow.com.