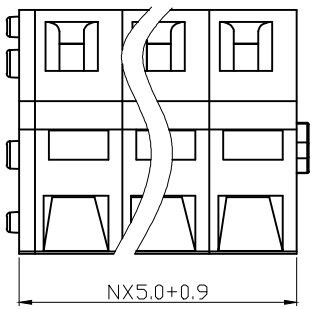

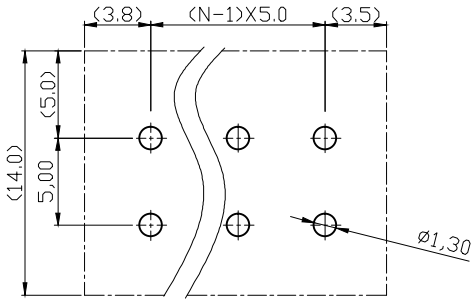

Recommended PCB Layout

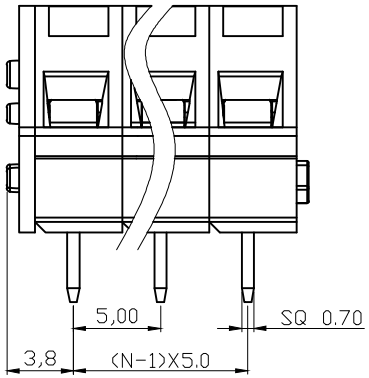

N=Number of contacts

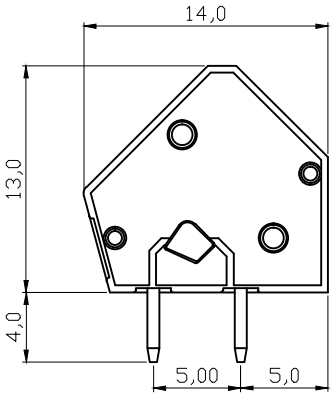

MATERIAL
1.Insulator (housing):Thermoplastic (UL 94V-0) Grey(7004)
2.Spring Clamp : Stainless steel
3.Surface of solder tail: Tin plated
4.Terminal body(Contact pin): Brass

ELECTRICAL
1.Current Rating : 15A
2.Voltage Rating : 300V AC
3.Solid wire(AWG): 12-28
4.Stranded wire(AWG): 12-28
5.Wire strip length: 6-7 mm
6.Withstand Voltage : 1.6KV

ENVIRONMENTAL
1.Soldering Temperature: 250°C ±10°C/5 Sec
2.Operating Temperature: -40°C to +115°C
3.Safety approval: c[redacted]us

RoHS compliant

Unit: mm

③ UL File No.: E349947

Scale	1:1
TOLERANCE	
X.	±0.50
X.X	±0.30
X.XX	±0.10
DIM	TOL
X.°	±1°
X.X°	±X°
Angle	TOL

Id.	Modification	Date	Name
③	Add UL	18.04.2016	Joanna
②	Updated	19.10.2010	Rale
①	Drawn	15.12.2008	Dean

	Date	Name
Drawn	15.12.2008	Dean
Approved	18.04.2016	Joanna

ASSMANN WSW components

Customer-No.

ASSMANN WSW-No.
A-TB500-HGxx

Drawing-No.
ASS 3215 CO

rev03

Replace

Sheet

SV1323
SV2088

Downloaded from Arrow.com.