AS-4.096-18-EXT-SMD-TR

SPECIFICATIONS

PARAMETER	VALUE
FREQUENCY RANGE	4.096 MHz
MODE OF OSCILLATION	FUNDAMENTAL
FREQUENCY TOLERANCE AT 25°C	±30 PPM STANDARD
FREQUENCY STABILITY OVER TEMPERATURE	±50 PPM STANDARD
OPERATING TEMPERATURE RANGE	-40°C TO +85°C EXTENDED
STORAGE TEMPERATURE RANGE	-40°C TO +90°C
AGING	±5 PPM PER YEAR MAXIMUM
LOAD CAPACITANCE	18 pF
EQUIVALENT SERIES RESISTANCE	130 Ω
SHUNT CAPACITANCE	5 pF MAXIMUM
DRIVE LEVEL	100 µW TYPICAL, 500 µW MAXIMUM
REFLOW CONDITIONS	260°C ±5°C FOR 10s MAXIMUM



Photo is not actual part

MECHANICAL SPECIFICATION

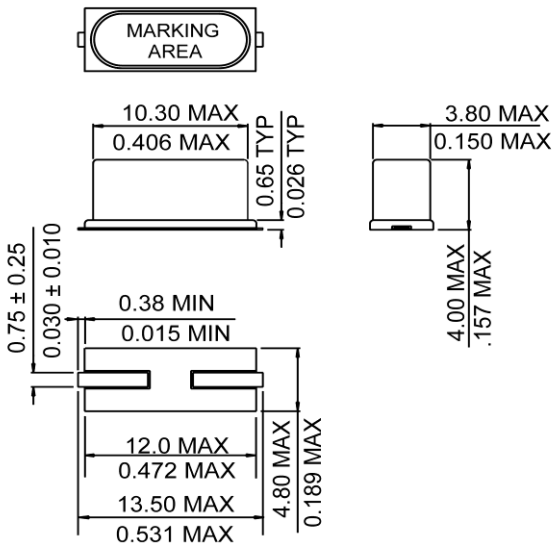

CARRIER TAPE DIMENSIONS

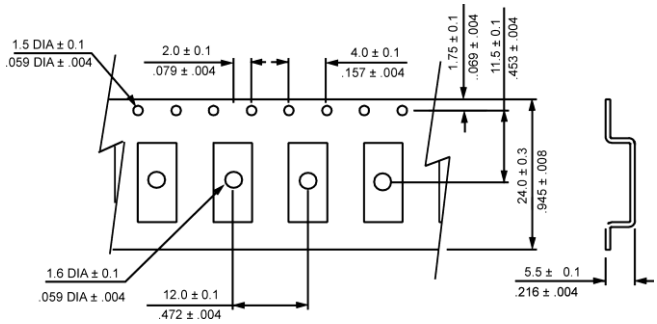

NOTE: REFER TO EIA-481 FOR DIMENSIONS

- **PACKAGING**

  178 mm REEL DIAMETER
  24 mm TAPE WIDTH, 4 mm PITCH
  QUANTITY: 1000 PIECES PER REEL

  IN ACCORDANCE WITH EIA-481

Downloaded from Arrow.com.

REFLOW PROFILE

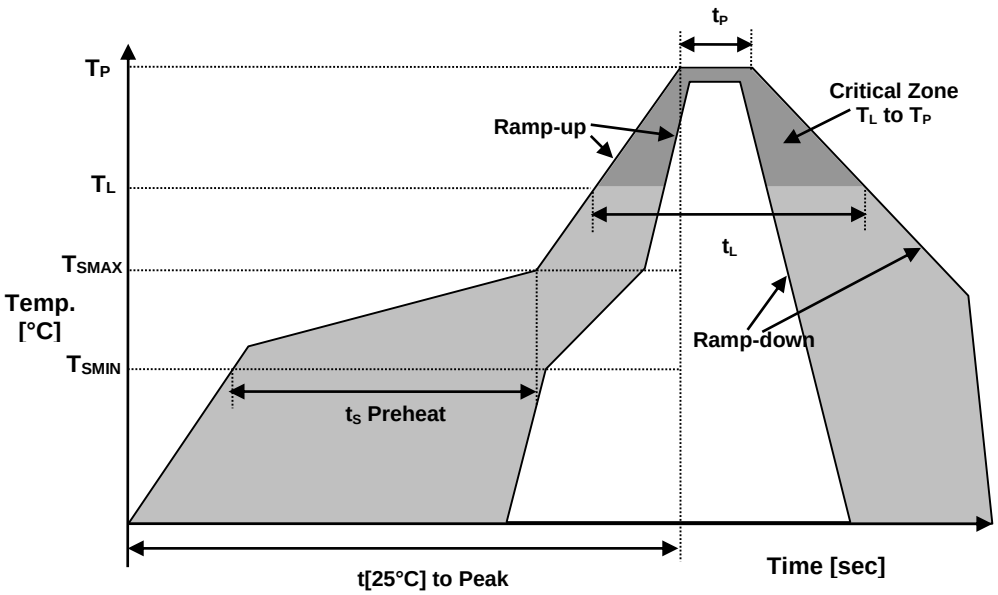

Reflow profile		
Temperature Min Preheat	T_{SMIN}	150°C
Temperature Max Preheat	T_{SMAX}	200°C
Time (T_{SMIN} to T_{SMAX})	t_S	60-180 sec.
Temperature	T_L	217°C
Peak Temperature	T_P	260°C
Ramp-up rate	R_{UP}	3°C/sec max.
Ramp-down rate	R_{DOWN}	6°C/sec max.
Time within 5°C of Peak Temperature	t_P	10 sec.
Time t[25°C] to Peak Temperature	t[25°C] to Peak	480 sec.
Time	t_L	60-150 sec.

ENVIRONMENTAL

PARAMETER	VALUE
MOISTURE SENSITIVITY LEVEL	1
RoHS-2	6/6 COMPLIANT & LEAD FREE
REACH SVHC	COMPLIANT
HALOGEN-FREE	COMPLIANT
ESD CLASSIFICATION LEVEL	N/A
TERMINATION FINISH	Sn

Downloaded from Arrow.com.

• MARKING

R049AxxByw

x – Internal Production ID code
y – Year code
w – Week code

YEAR CODE	
Year	**Code**
2011	1
2012	2
2013	3
2014	4
2015	5
2016	6
2017	7
2018	8
2019	9

ALPHA WEEK CODE TABLE					
Week	**Code**	**Week**	**Code**	**Week**	**Code**
1	a	19	s	37	K
2	b	20	t	38	L
3	c	21	u	39	M
4	d	22	v	40	N
5	e	23	w	41	O
6	f	24	x	42	P
7	g	25	y	43	Q
8	h	26	z	44	R
9	i	27	A	45	S
10	j	28	B	46	T
11	k	29	C	47	U
12	l	30	D	48	V
13	m	31	E	49	W
14	n	32	F	50	X
15	o	33	G	51	Y
16	p	34	H	52	Z
17	q	35	I		
18	r	36	J		

• APPROVAL

DRAWN BY:	KJackson, March 20, 2015
APPROVED BY:	KJackson, March 20, 2015
REVISION:	A, Initial Release

Downloaded from Arrow.com.