ON Semiconductor

Is Now

To learn more about onsemi™, please visit our website at
www.onsemi.com

onsemi and onsemi and other names, marks, and brands are registered and/or common law trademarks of Semiconductor Components Industries, LLC dba "**onsemi**" or its affiliates and/or subsidiaries in the United States and/or other countries. **onsemi** owns the rights to a number of patents, trademarks, copyrights, trade secrets, and other intellectual property. A listing of **onsemi** product/patent coverage may be accessed at www.onsemi.com/site/pdf/Patent-Marking.pdf. **onsemi** reserves the right to make changes at any time to any products or information herein, without notice. The information herein is provided "as-is" and **onsemi** makes no warranty, representation or guarantee regarding the accuracy of the information, product features, availability, functionality, or suitability of its products for any particular purpose, nor does **onsemi** assume any liability arising out of the application or use of any product or circuit, and specifically disclaims any and all liability, including without limitation special, consequential or incidental damages. Buyer is responsible for its products and applications using **onsemi** products, including compliance with all laws, regulations and safety requirements or standards, regardless of any support or applications information provided by **onsemi**. "Typical" parameters which may be provided in **onsemi** data sheets and/or specifications can and do vary in different applications and actual performance may vary over time. All operating parameters, including "Typicals" must be validated for each customer application by customer's technical experts. **onsemi** does not convey any license under any of its intellectual property rights nor the rights of others. **onsemi** products are not designed, intended, or authorized for use as a critical component in life support systems or any FDA Class 3 medical devices or medical devices with a same or similar classification in a foreign jurisdiction or any devices intended for implantation in the human body. Should Buyer purchase or use **onsemi** products for any such unintended or unauthorized application, Buyer shall indemnify and hold **onsemi** and its officers, employees, subsidiaries, affiliates, and distributors harmless against all claims, costs, damages, and expenses, and reasonable attorney fees arising out of, directly or indirectly, any claim of personal injury or death associated with such unintended or unauthorized use, even if such claim alleges that **onsemi** was negligent regarding the design or manufacture of the part. **onsemi** is an Equal Opportunity/Affirmative Action Employer. This literature is subject to all applicable copyright laws and is not for resale in any manner. Other names and brands may be claimed as the property of others.

Downloaded from Arrow.com.

KAI-08051

3296 (H) x 2472 (V) Interline CCD Image Sensor

ON Semiconductor®

www.onsemi.com

Description

The KAI−08051 Image Sensor is an 8−megapixel CCD in a 4/3” optical format that provides increased QE, reduced read noise, and improved color accuracy compared to earlier generation devices in the TRUESENSE 5.5 micron Interline Transfer CCD family. The sensor features broad dynamic range, excellent imaging performance, and a flexible readout architecture that enables use of 1, 2, or 4 outputs. Full resolution readout is supported at up to 16 frames per second, a Region of Interest (ROI) mode supports partial readout of the sensor at even higher frame rates.

The sensor is available with the TRUESENSE Sparse Color Filter Pattern, which provides a 2x improvement in light sensitivity compared to a standard color Bayer part.

The sensor shares common pin−out and electrical configurations with other devices based on the TRUESENSE 5.5 micron Interline Transfer Platform, allowing a single camera design to support multiple members of this family.

Table 1. GENERAL SPECIFICATIONS

Parameter	Typical Value
Architecture	Interline CCD; Progressive Scan
Total Number of Pixels	3364 (H) x 2520 (V)
Number of Effective Pixels	3320 (H) x 2496 (V)
Number of Active Pixels	3296 (H) x 2472 (V)
Pixel Size	5.5 μm (H) x 5.5 μm (V)
Active Image Size	18.13 mm (H) x 13.60 mm (V) 22.66 mm (diag), 4/3” optical format
Aspect Ratio	4:3
Number of Outputs	1, 2, or 4
Charge Capacity	20,000 electrons
Output Sensitivity	39 μV/e−
Quantum Efficiency RGB (−FXA−JD, −FXA−JP (no glass), −QXP−JD) RGB (−FBA−JD, −FBA−JP (no glass)) Mono, PAN (−AAA−JP) Mono (−AXA−JD, −AXA−JP (no glass)) Mono (−ABA−JD, −ABA−JP (no glass))	 33%, 41%, 42% 30%, 37%, 39% 4.0%, 4.4% 51% 52%
Read Noise (f = 40 MHz)	10 e−
Dark Current Photodiode VCCD	 7 electrons/s 100 electrons/s
Dark Current Doubling Temp. Photodiode VCCD	 7°C 9°C
Dynamic Range	66 dB
Charge Transfer Efficiency	0.999999
Blooming Suppression	> 300 X
Smear	−100 dB
Image Lag	< 10 electrons
Maximum Pixel Clock Speed	40 MHz
Maximum Frame Rates Quad Output Dual Output Single Output	 16 fps 8 fps 4 fps
Package	68 pin PGA
Cover Glass	AR coated, 2 Sides or Clear Glass

NOTE: All parameters are specified at T = 40°C unless otherwise noted.

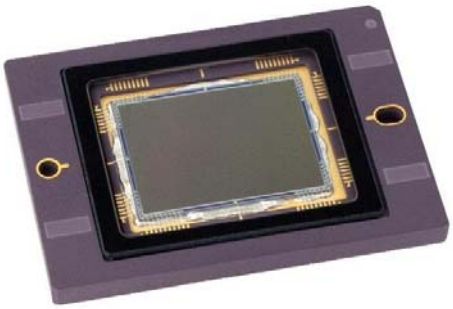

Figure 1. KAI−08051 CCD Image Sensor

Features

- Increased QE, Reduced Read Noise, and and Improved Color Accuracy
- Bayer Color Pattern, TRUESENSE Sparse Color Filter Pattern, and Monochrome Configurations
- Progressive Scan Readout
- Flexible Readout Architecture
- High Frame Rate
- High Sensitivity
- Low Noise Architecture
- Excellent Smear Performance
- Package Pin Reserved for Device Identification

Applications

- Industrial Imaging
- Medical Imaging
- Security

ORDERING INFORMATION

See detailed ordering and shipping information on page 2 of this data sheet.

© Semiconductor Components Industries, LLC, 2015

December, 2015 − Rev. 5

Publication Order Number:
KAI−08051/D

Downloaded from Arrow.com.

ORDERING INFORMATION

Table 2. ORDERING INFORMATION − KAI−08051 IMAGE SENSOR

Part Number	Description	Marking Code
KAI−08051−AAA−JP−BA	Monochrome, No Microlens, PGA Package, Taped Clear Cover Glass, no coatings, Standard Grade	KAI−08051−AAA Serial Number
KAI−08051−AAA−JP−AE	Monochrome, No Microlens, PGA Package, Taped Clear Cover Glass, no coatings, Engineering Grade	
KAI−08051−AXA−JD−BA	Monochrome, Special Microlens, PGA Package, Sealed Clear Cover Glass with AR coatings (both sides), Standard Grade	KAI−08051−AXA Serial Number
KAI−08051−AXA−JD−AE	Monochrome, Special Microlens, PGA Package, Sealed Clear Cover Glass with AR coatings (both sides), Engineering Grade	
KAI−08051−AXA−JP−BA	Monochrome, Special Microlens, PGA Package, Taped Clear Cover Glass, no coatings, Standard Grade	KAI−08051−AXA Serial Number
KAI−08051−AXA−JP−AE	Monochrome, Special Microlens, PGA Package, Taped Clear Cover Glass, no coatings, Engineering Grade	
KAI−08051−FXA−JD−BA	Gen2 Color (Bayer RGB), Special Microlens, PGA Package, Sealed Clear Cover Glass with AR coatings (both sides), Standard Grade	KAI−08051−FXA Serial Number
KAI−08051−FXA−JD−AE	Gen2 Color (Bayer RGB), Special Microlens, PGA Package, Sealed Clear Cover Glass with AR coatings (both sides), Engineering Grade	
KAI−08051−FXA−JB−B2	Gen2 Color (Bayer RGB), Special Microlens, PGA Package, Sealed Clear Cover Glass, no coatings, Grade 2	KAI−08051−FXA Serial Number
KAI−08051−FXA−JB−AE	Gen2 Color (Bayer RGB), Special Microlens, PGA Package, Sealed Clear Cover Glass, no coatings, Engineering Grade	
KAI−08051−QXA−JD−BA	Gen2 Color (Sparse CFA), Special Microlens, PGA Package, Sealed Clear Cover Glass with AR coatings (both sides), Standard Grade	KAI−08051−QXA Serial Number
KAI−08051−QXA−JD−AE	Gen2 Color (Sparse CFA), Special Microlens, PGA Package, Sealed Clear Cover Glass with AR coatings (both sides), Engineering Grade	
KAI−08051−ABA−JD−BA *	Monochrome, Telecentric Microlens, PGA Package, Sealed Clear Cover Glass with AR coatings (both sides), Standard Grade	KAI−08051−ABA Serial Number
KAI−08051−ABA−JD−AE *	Monochrome, Telecentric Microlens, PGA Package, Sealed Clear Cover Glass with AR coatings (both sides), Engineering Grade	
KAI−08051−ABA−JP−BA *	Monochrome, Telecentric Microlens, PGA Package, Taped Clear Cover Glass, no coatings, Standard Grade	KAI−08051−ABA Serial Number
KAI−08051−ABA−JP−AE *	Monochrome, Telecentric Microlens, PGA Package, Taped Clear Cover Glass, no coatings, Engineering Grade	
KAI−08051−FBA−JD−BA *	Gen2 Color (Bayer RGB), Telecentric Microlens, PGA Package, Sealed Clear Cover Glass with AR coatings (both sides), Standard Grade	KAI−08051−FBA Serial Number
KAI−08051−FBA−JD−AE *	Gen2 Color (Bayer RGB), Telecentric Microlens, PGA Package, Sealed Clear Cover Glass with AR coatings (both sides), Engineering Grade	
KAI−08051−FBA−JB−B2 *	Gen2 Color (Bayer RGB), Telecentric Microlens, PGA Package, Sealed Clear Cover Glass, no coatings, Grade 2	KAI−08051−FBA Serial Number
KAI−08051−FBA−JB−AE *	Gen2 Color (Bayer RGB), Telecentric Microlens, PGA Package, Sealed Clear Cover Glass, no coatings, Engineering Grade	
KAI−08051−QBA−JD−BA *	Gen2 Color (Sparse CFA), Telecentric Microlens, PGA Package, Sealed Clear Cover Glass with AR coatings (both sides), Standard Grade	KAI−08051−FBA Serial Number
KAI−08051−QBA−JD−AE *	Gen2 Color (Sparse CFA), Telecentric Microlens, PGA Package, Sealed Clear Cover Glass with AR coatings (both sides), Engineering Grade	

*Not recommended for new designs.

See the ON Semiconductor *Device Nomenclature* document (TND310/D) for a full description of the naming convention used for image sensors. For reference documentation, including information on evaluation kits, please visit our web site at www.onsemi.com.

Downloaded from Arrow.com.

DEVICE DESCRIPTION

Architecture

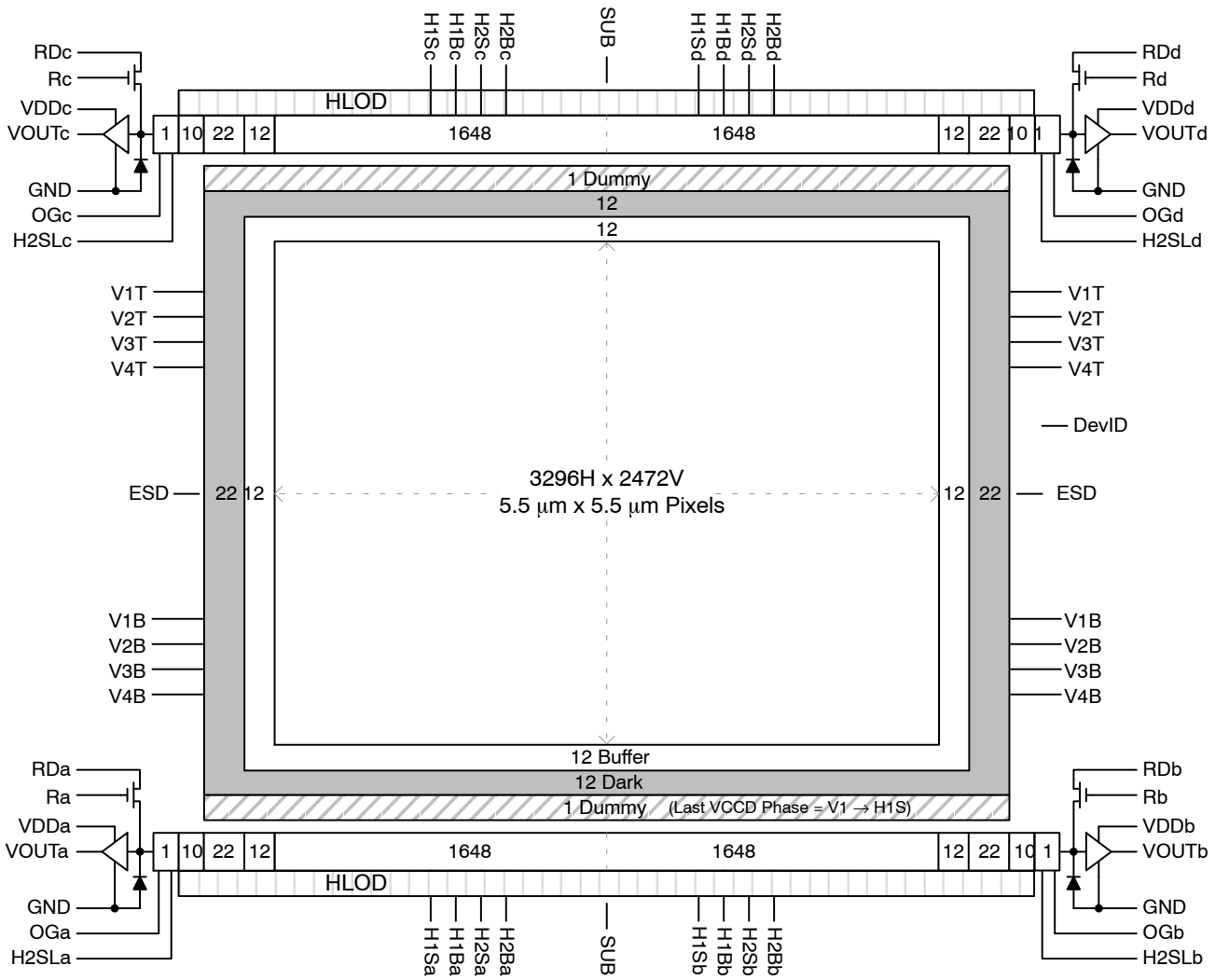

Figure 2. Block Diagram (Monochrome − No Filter Pattern)

Dark Reference Pixels

There are 12 dark reference rows at the top and 12 dark rows at the bottom of the image sensor. The dark rows are not entirely dark and so should not be used for a dark reference level. Use the 22 dark columns on the left or right side of the image sensor as a dark reference.

Under normal circumstances use only the center 20 columns of the 22 column dark reference due to potential light leakage.

Dummy Pixels

Within each horizontal shift register there are 11 leading additional shift phases. These pixels are designated as dummy pixels and should not be used to determine a dark reference level.

In addition, there is one dummy row of pixels at the top and bottom of the image.

Active Buffer Pixels

12 unshielded pixels adjacent to any leading or trailing dark reference regions are classified as active buffer pixels. Eight of the active buffer pixels that are adjacent to the dark reference region have a lower response than the rest of the 4 active buffer pixels that are directly adjacent to the active pixels. These pixels are light sensitive but are not tested for defects and non−uniformities.

Image Acquisition

An electronic representation of an image is formed when incident photons falling on the sensor plane create electron−hole pairs within the individual silicon photodiodes. These photoelectrons are collected locally by the formation of potential wells at each photosite. Below photodiode saturation, the number of photoelectrons collected at each pixel is linearly dependent upon light level

Downloaded from Arrow.com.

and exposure time and non−linearly dependent on wavelength. When the photodiodes charge capacity is reached, excess electrons are discharged into the substrate to prevent blooming.

ESD Protection

Adherence to the power−up and power−down sequence is critical. Failure to follow the proper power−up and power−down sequences may cause damage to the sensor. See Power−Up and Power−Down Sequence section.

Bayer Color Filter Pattern

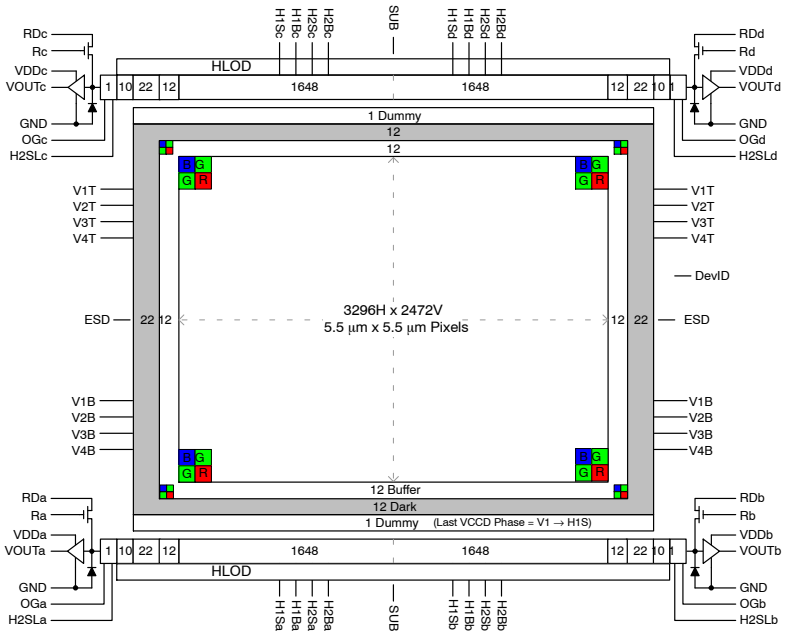

Figure 3. Bayer Color Filter Pattern

TRUESENSE Sparse Color Filter Pattern

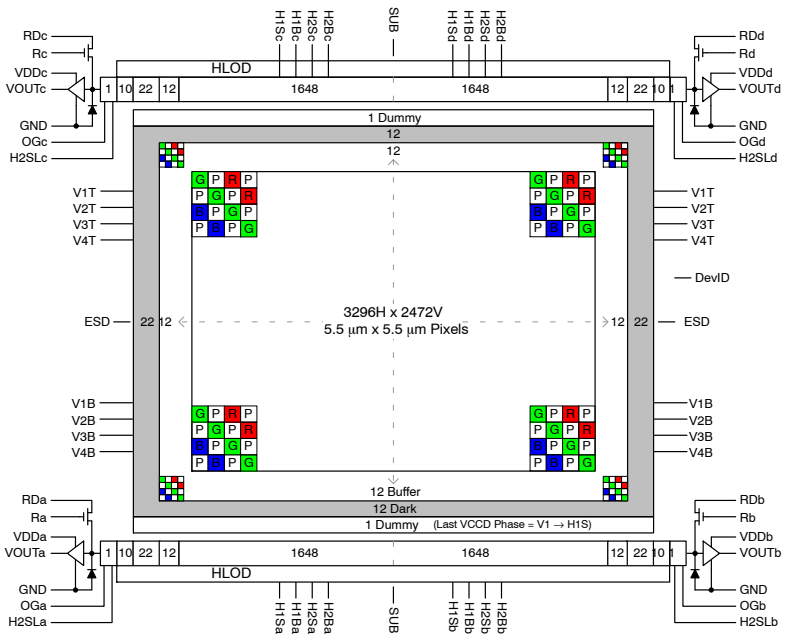

Figure 4. TRUESENSE Sparse Color Filter Pattern

Downloaded from Arrow.com.

PHYSICAL DESCRIPTION

Pin Description and Device Orientation

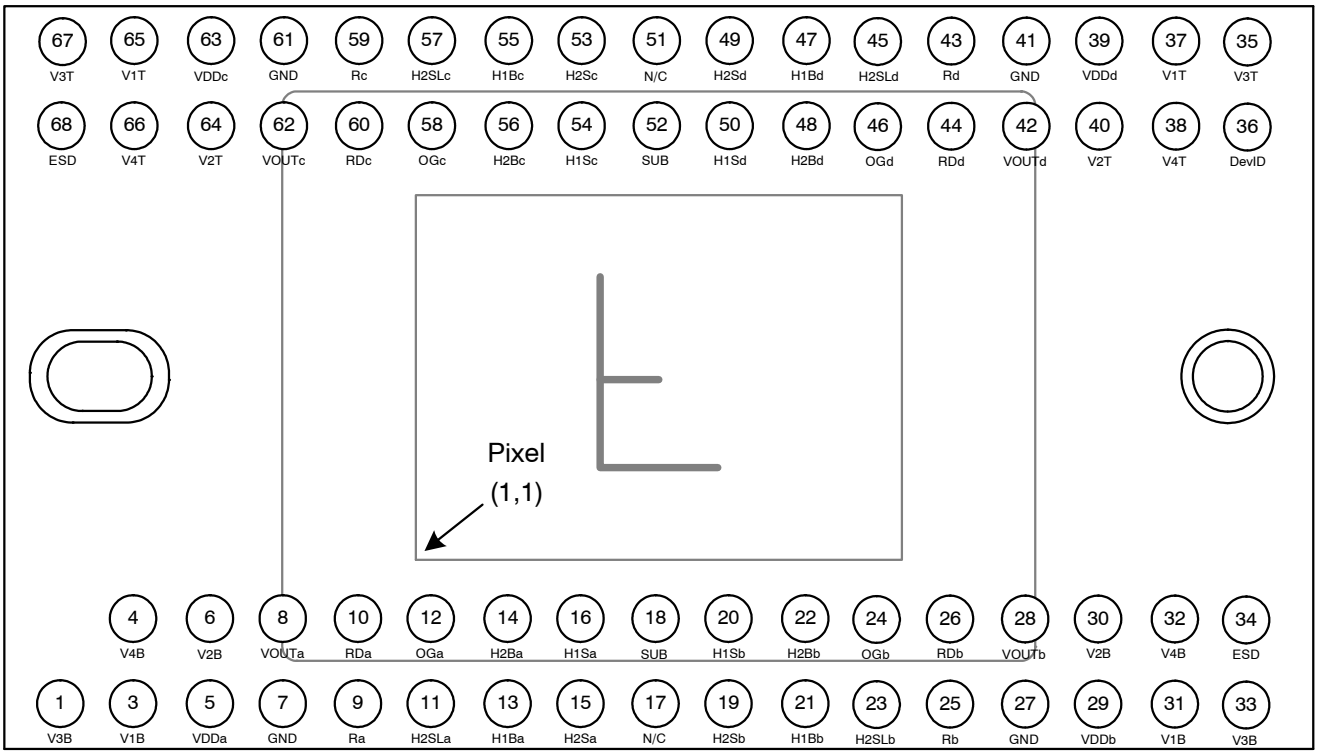

Figure 5. Package Pin Designations − Top View

Downloaded from Arrow.com.

Table 3. PIN DESCRIPTION

Pin	Name	Description
1	V3B	Vertical CCD Clock, Phase 3, Bottom
3	V1B	Vertical CCD Clock, Phase 1, Bottom
4	V4B	Vertical CCD Clock, Phase 4, Bottom
5	VDDa	Output Amplifier Supply, Quadrant a
6	V2B	Vertical CCD Clock, Phase 2, Bottom
7	GND	Ground
8	VOUTa	Video Output, Quadrant a
9	Ra	Reset Gate, Quadrant a
10	RDa	Reset Drain, Quadrant a
11	H2SLa	Horizontal CCD Clock, Phase 2, Storage, Last Phase, Quadrant a
12	OGa	Output Gate, Quadrant a
13	H1Ba	Horizontal CCD Clock, Phase 1, Barrier, Quadrant a
14	H2Ba	Horizontal CCD Clock, Phase 2, Barrier, Quadrant a
15	H2Sa	Horizontal CCD Clock, Phase 2, Storage, Quadrant a
16	H1Sa	Horizontal CCD Clock, Phase 1, Storage, Quadrant a
17	N/C	No Connect
18	SUB	Substrate
19	H2Sb	Horizontal CCD Clock, Phase 2, Storage, Quadrant b
20	H1Sb	Horizontal CCD Clock, Phase 1, Storage, Quadrant b
21	H1Bb	Horizontal CCD Clock, Phase 1, Barrier, Quadrant b
22	H2Bb	Horizontal CCD Clock, Phase 2, Barrier, Quadrant b
23	H2SLb	Horizontal CCD Clock, Phase 2, Storage, Last Phase, Quadrant b
24	OGb	Output Gate, Quadrant b
25	Rb	Reset Gate, Quadrant b
26	RDb	Reset Drain, Quadrant b
27	GND	Ground
28	VOUTb	Video Output, Quadrant b
29	VDDb	Output Amplifier Supply, Quadrant b
30	V2B	Vertical CCD Clock, Phase 2, Bottom
31	V1B	Vertical CCD Clock, Phase 1, Bottom
32	V4B	Vertical CCD Clock, Phase 4, Bottom
33	V3B	Vertical CCD Clock, Phase 3, Bottom
34	ESD	ESD Protection Disable
68	ESD	ESD Protection Disable
67	V3T	Vertical CCD Clock, Phase 3, Top
66	V4T	Vertical CCD Clock, Phase 4, Top
65	V1T	Vertical CCD Clock, Phase 1, Top
64	V2T	Vertical CCD Clock, Phase 2, Top
63	VDDc	Output Amplifier Supply, Quadrant c
62	VOUTc	Video Output, Quadrant c
61	GND	Ground
60	RDc	Reset Drain, Quadrant c
59	Rc	Reset Gate, Quadrant c
58	OGc	Output Gate, Quadrant c
57	H2SLc	Horizontal CCD Clock, Phase 2, Storage, Last Phase, Quadrant c
56	H2Bc	Horizontal CCD Clock, Phase 2, Barrier, Quadrant c
55	H1Bc	Horizontal CCD Clock, Phase 1, Barrier, Quadrant c
54	H1Sc	Horizontal CCD Clock, Phase 1, Storage, Quadrant c
53	H2Sc	Horizontal CCD Clock, Phase 2, Storage, Quadrant c
52	SUB	Substrate
51	N/C	No Connect
50	H1Sd	Horizontal CCD Clock, Phase 1, Storage, Quadrant d
49	H2Sd	Horizontal CCD Clock, Phase 2, Storage, Quadrant d
48	H2Bd	Horizontal CCD Clock, Phase 2, Barrier, Quadrant d
47	H1Bd	Horizontal CCD Clock, Phase 1, Barrier, Quadrant d
46	OGd	Output Gate, Quadrant d
45	H2SLd	Horizontal CCD Clock, Phase 2, Storage, Last Phase, Quadrant d
44	RDd	Reset Drain, Quadrant d
43	Rd	Reset Gate, Quadrant d
42	VOUTd	Video Output, Quadrant d
41	GND	Ground
40	V2T	Vertical CCD Clock, Phase 2, Top
39	VDDd	Output Amplifier Supply, Quadrant d
38	V4T	Vertical CCD Clock, Phase 4, Top
37	V1T	Vertical CCD Clock, Phase 1, Top
36	DevID	Device Identification
35	V3T	Vertical CCD Clock, Phase 3, Top

1. Liked named pins are internally connected and should have a common drive signal.
2. N/C pins (17, 51) should be left floating.

Downloaded from Arrow.com.

IMAGING PERFORMANCE

Table 4. TYPICAL OPERATION CONDITIONS

Unless otherwise noted, the Imaging Performance Specifications are measured using the following conditions.

Description	Condition	Notes
Light Source	Continuous red, green and blue LED illumination	For monochrome sensor, only green LED used.
Operation	Nominal operating voltages and timing	

Table 5. SPECIFICATIONS
All Configurations

Description	Symbol	Min.	Nom.	Max.	Units	Sampling Plan	Temperature Tested At (°C)	Notes
Dark Field Global Non−Uniformity	DSNU	–	–	2.0	mVpp	Die	27, 40	
Bright Field Global Non−Uniformity		–	2.0	5.0	%rms	Die	27, 40	1
Maximum Gain Difference Between Outputs	ΔG	–	10	–	%	Design		2
Maximum Signal Error due to Nonlinearity Differences	ΔNL	–	1	–	%	Design		2
Horizontal CCD Charge Capacity	HNe	–	55	–	ke^-	Design		
Vertical CCD Charge Capacity	VNe	–	40	–	ke^-	Design		
Photodiode Charge Capacity	PNe	–	20	–	ke^-	Die	27, 40	3
Horizontal CCD Charge Transfer Efficiency	HCTE	0.999995	0.999999	–		Die		
Vertical CCD Charge Transfer Efficiency	VCTE	0.999995	0.999999	–		Die		
Photodiode Dark Current	Ipd	–	1	70	e/p/s	Die	40	
Vertical CCD Dark Current	Ivd	–	100	300	e/p/s	Die	40	
Image Lag	Lag	–	–	10	e^-	Design		
Antiblooming Factor	Xab	300	–	–		Design		
Vertical Smear	Smr	–	−100	–	dB	Design		
Read Noise	n_{e-T}	–	10	–	e^-rms	Design		4
Dynamic Range	DR	–	66	–	dB	Design		4, 5
Output Amplifier DC Offset	V_{odc}	–	8.9	–	V	Die	27, 40	
Output Amplifier Bandwidth	f_{-3db}	–	250	–	MHz	Die		6
Output Amplifier Impedance	R_{OUT}	–	127	–	Ω	Die	27, 40	
Output Amplifier Sensitivity	ΔV/ΔN	–	39	–	$\mu V/e^-$	Design		
Bright Field Global Non−Uniformity (−FXA, −QXA)		–	2.2	5	%rms	Die	27, 40	1
Bright Field Global Peak to Peak Non−Uniformity (−FXA, −QXA)	PRNU	–	9.5	20	%pp	Die	27, 40	1

1. Per color
2. Value is over the range of 10% to 90% of photodiode saturation.
3. The operating value of the substrate voltage, VAB, will be marked on the shipping container for each device. The value of VAB is set such that the photodiode charge capacity is 780 mV.
4. At 40 MHz
5. Uses 20LOG (PNe/ n_{e-T})
6. Assumes 5 pF load.
7. Monochrome or PAN pixels

Downloaded from Arrow.com.

Table 5. SPECIFICATIONS
All Configurations

Description	Symbol	Min.	Nom.	Max.	Units	Sampling Plan	Temperature Tested At (°C)	Notes
Bright Field Center Non−Uniformity (−FXA, −QXA)		–	1.3	2.5	%	Die	27, 40	1
Bright Field Global Non−Uniformity (−AXA, −QXA)		–	1.5	2	%rms	Die	27, 40	7
Bright Field Global Peak to Peak Non−Uniformity (−AXA, −QXA)	PRNU	–	5	12	%pp	Die	27, 40	7
Bright Field Center Non−Uniformity (−AXA, −QXA)		–	0.9	1.5	%	Die	27, 40	7
Bright Field Global Non−Uniformity (−FBA, −QBA)		–	2	5	%rms	Die	27, 40	1
Bright Field Global Peak to Peak Non−Uniformity (−FBA, −QBA)	PRNU	–	5	15	%pp	Die	27, 40	1
Bright Field Center Non−Uniformity (−FBA, −QBA)		–	1	2	%	Die	27, 40	1
Bright Field Global Non−Uniformity (−ABA, −QBA)		–	2	5	%rms	Die	27, 40	7
Bright Field Global Peak to Peak Non−Uniformity (−ABA, −QBA)	PRNU	–	5	15	%pp	Die	27, 40	7
Bright Field Center Non−Uniformity (−ABA, −QBA)		–	1	2	%	Die	27, 40	7

1. Per color
2. Value is over the range of 10% to 90% of photodiode saturation.
3. The operating value of the substrate voltage, VAB, will be marked on the shipping container for each device. The value of VAB is set such that the photodiode charge capacity is 780 mV.
4. At 40 MHz
5. Uses 20LOG (PNe/ n_{e-T})
6. Assumes 5 pF load.
7. Monochrome or PAN pixels

Table 6. MONO (OR PAN) PIXEL QUANTUM EFFICIENCY FOR KAI−08051−AXA, KAI−08051−ABA (1), KAI−08051−QBA, AND KAI−08051−PBA (1) CONFIGURATIONS WITH AR GLASS

Description		Symbol	Min.	Nom.	Max.	Units	Sampling Plan	Temperature Tested At (°C)	Notes
Peak Quantum Efficiency	Mono or Pan	QE_{max}	–	51	–	%	Design	30	
Peak Quantum Efficiency	Mono or Pan	λQE	–	460	–	nm	Design	30	

1. Configuration KAI−08051−ABA and KAI−08051−PBA are not recommended for new designs.

Downloaded from Arrow.com.

Table 7. QUANTUM EFFICIENCY FOR KAI−08051−FXA, KAI−08051−FBA (1), KAI−08051−QXA AND KAI−08051−QBA (1) CONFIGURATIONS WITH AR GLASS

Description		Symbol	Min.	Nom.	Max.	Units	Sampling Plan	Temperature Tested At (°C)	Notes
Peak Quantum Efficiency	Blue Green Red	QE_{max}	–	42 41 34	–	%	Design	30	
Peak Quantum Efficiency	Blue Green Red	λQE	–	460 540 600	–	nm	Design	30	

1. Configuration KAI−08051−FBA and KAI−08051−QBA are not recommended for new designs.

Table 8. QUANTUM EFFICIENCY FOR KAI−08051−FXA, KAI−08051−FBA (1), KAI−08051−QXA AND KAI−08051−QBA (1) CONFIGURATIONS WITH CLEAR GLASS

Description		Symbol	Min.	Nom.	Max.	Units	Sampling Plan	Temperature Tested At (°C)	Notes
Peak Quantum Efficiency	Blue Green Red	QE_{max}	–	38 38 31	–	%	Design	30	
Peak Quantum Efficiency Wavelength	Blue Green Red	λQE	–	460 540 600	–	nm	Design	30	

1. Configuration KAI−08051−FBA and KAI−08051−QBA are not recommended for new designs.

Downloaded from Arrow.com.

TYPICAL PERFORMANCE CURVES

Quantum Efficiency

Monochrome with Microlens

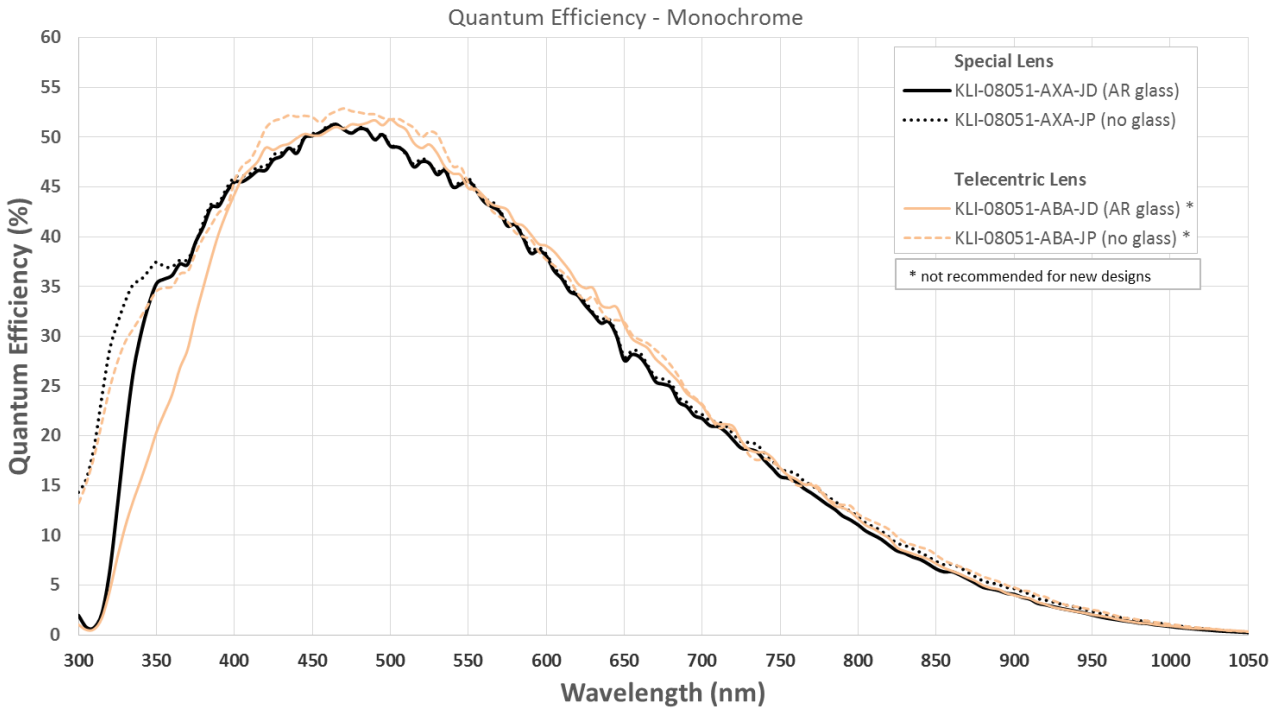

Figure 6. Quantum Efficiency: Monochrome with Microlens. Configuration with AR Glass and with No Glass.

Monochrome without Microlens

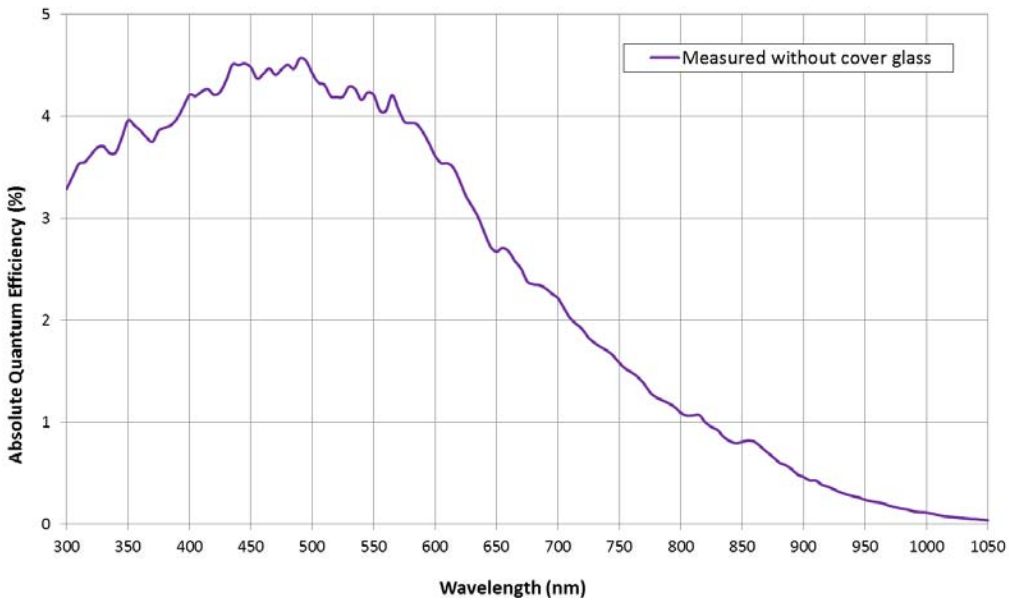

Figure 7. Monochrome without Microlens (No Cover Glass) Quantum Efficiency

Downloaded from Arrow.com.

KAI−08051 Color (Bayer RGB) with Microlens MAR Glass (compared to KAI−08050)

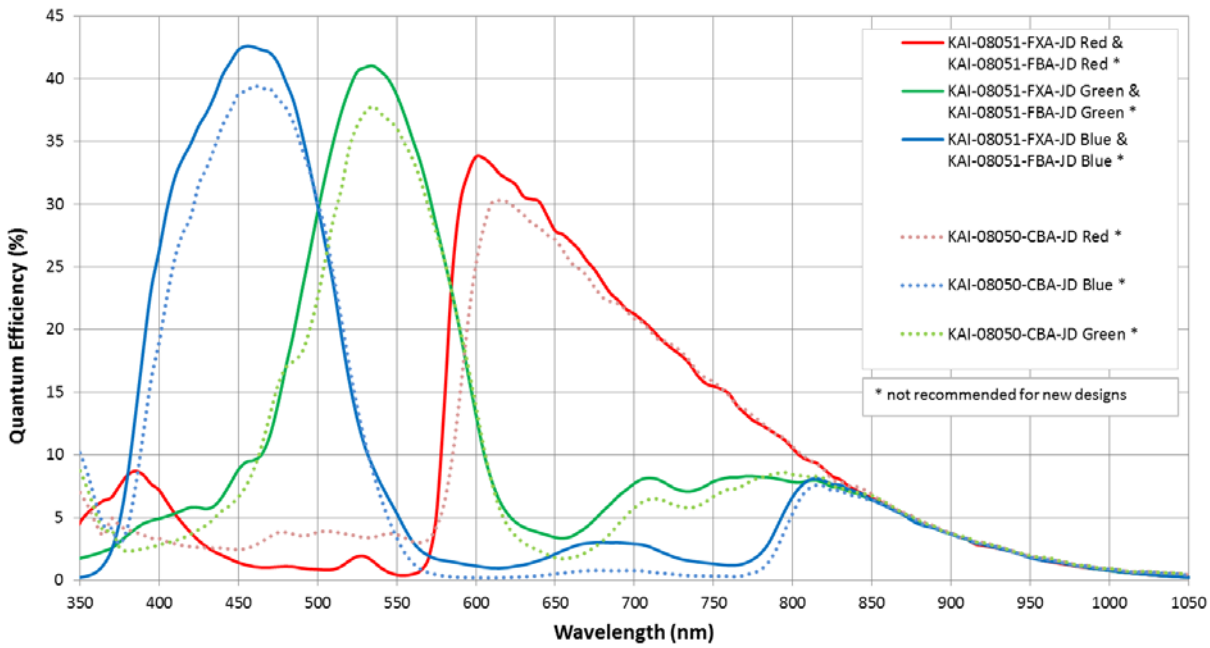

Figure 8. Quantum Efficiency: Color Bayer with Microlens and AR Glass Configuration. KAI−08051 compared to KAI−08050.

KAI−08051 Color (Bayer RGB) with Microlens (compared MAR vs. Clear Glass)

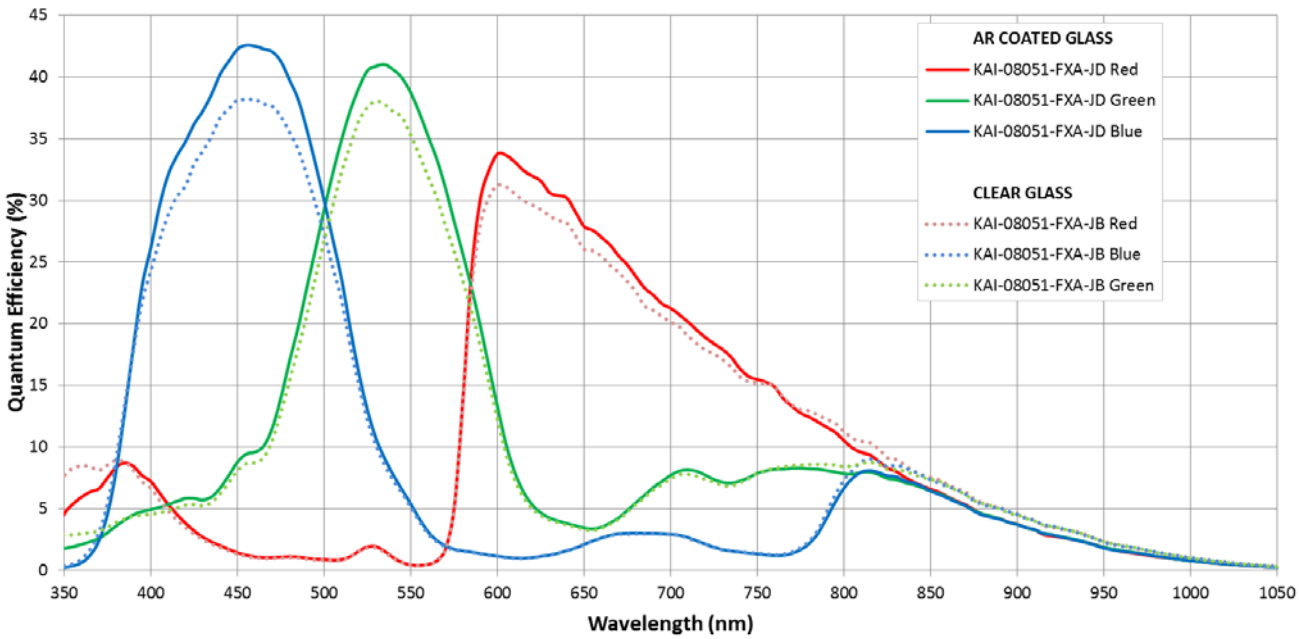

Figure 9. Quantum Efficiency: KAI−08051 Color Bayer with Microlens (AR vs. Clear Glass Configuration)

Downloaded from Arrow.com.

KAI−08051 Color (TRUESENSE Sparse CFA) with Microlens (MAR Glass)

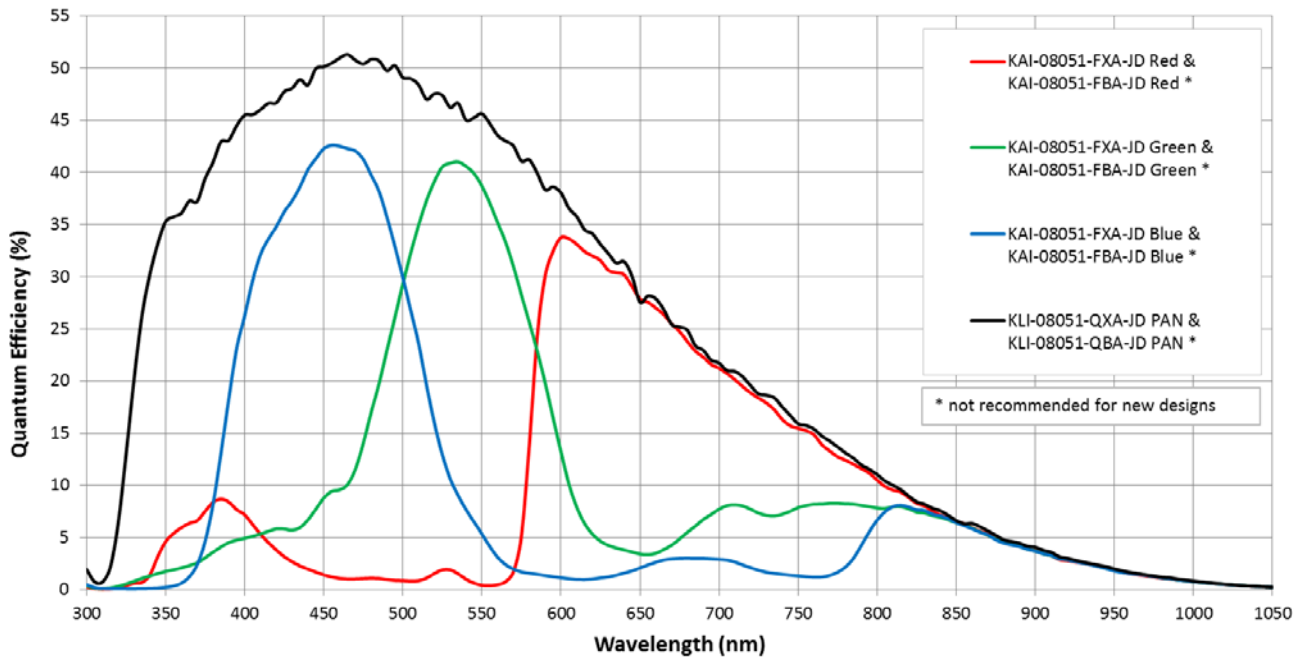

Figure 10. KAI−08051 Color (TRUESENSE Sparse CFA) with Microlens (MAR Glass) Quantum Efficiency

Downloaded from Arrow.com.

Angular Quantum Efficiency

For the curves marked “Horizontal”, the incident light angle is varied in a plane parallel to the HCCD.

For the curves marked “Vertical”, the incident light angle is varied in a plane parallel to the VCCD.

Monochrome with Microlens

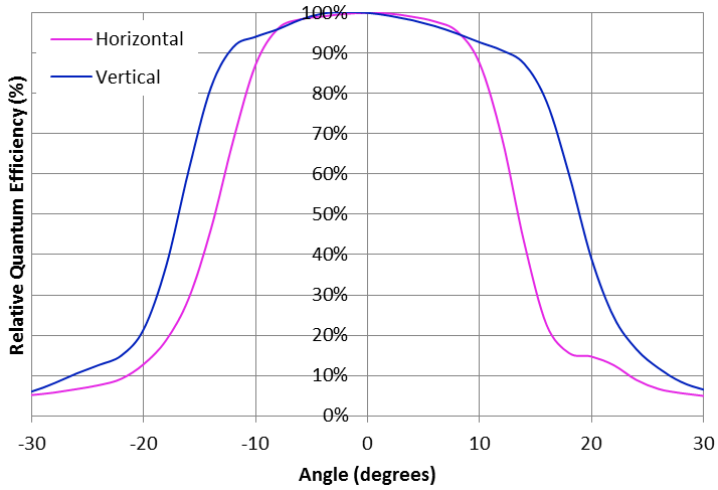

Figure 11. KAI−08051−ABA Monochrome with Microlens Angular Quantum Efficiency (not recommended for new designs)

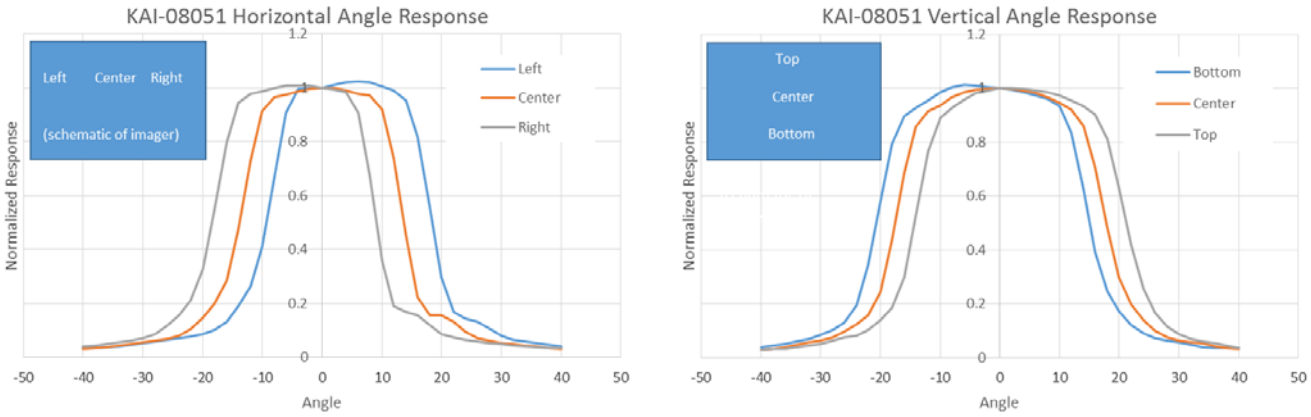

Figure 12. KAI−08051−AXA Monochrome with Special Microlens − Angular Quantum Efficiency

Downloaded from Arrow.com.

Dark Current versus Temperature

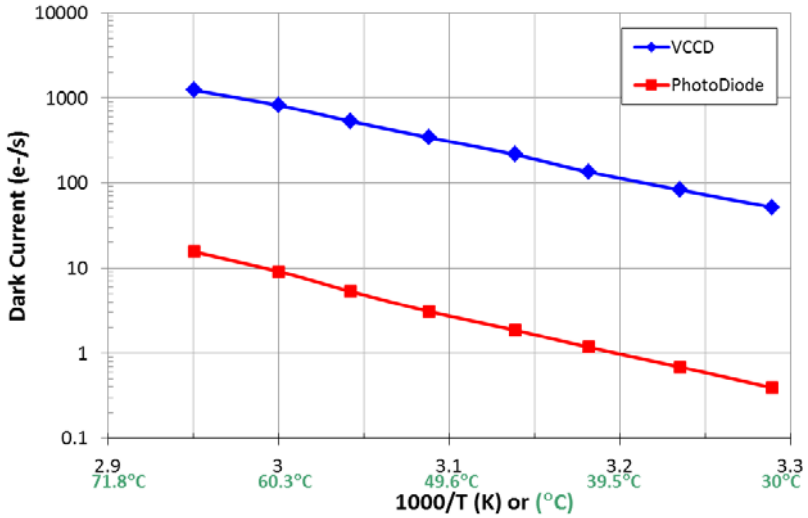

Figure 13. Dark Current versus Temperature

Downloaded from Arrow.com.

Power − Estimated

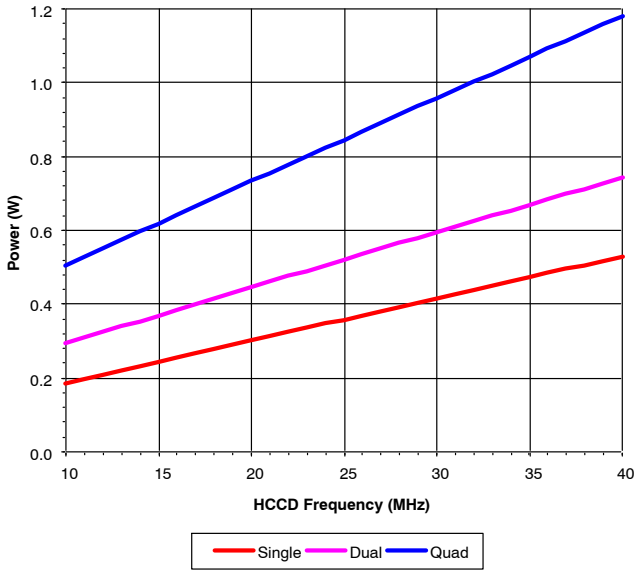

Figure 14. Power

Frame Rates

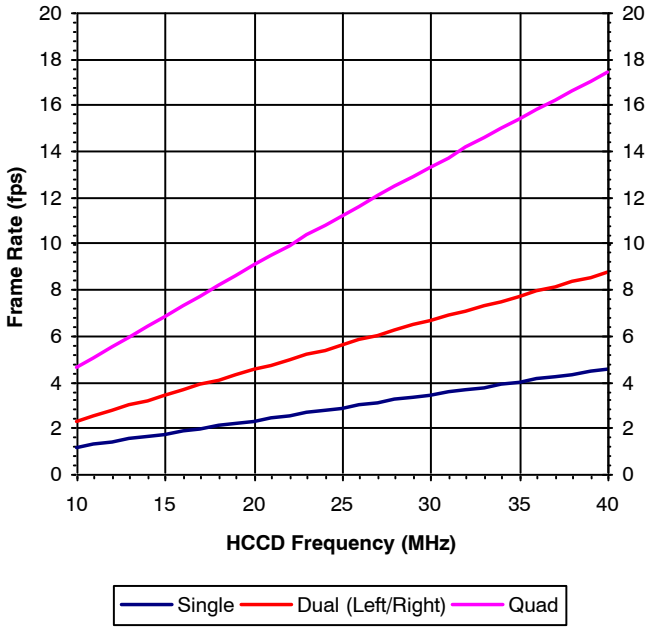

Figure 15. Frame Rates

Downloaded from Arrow.com.

DEFECT DEFINITIONS

Table 9. OPERATION CONDITIONS FOR DEFECT TESTING AT 40°C

Description	Condition	Notes
Operational Mode	Two outputs, using VOUTa and VOUTc, continuous readout	
HCCD Clock Frequency	10 MHz	
Pixels Per Line	3520	1
Lines Per Frame	1360	2
Line Time	354.9 μsec	
Frame Time	482.7 msec	
Photodiode Integration Time	Mode A: PD_Tint = Frame Time = 482.7 msec, no electronic shutter used	
	Mode B: PD_Tint = 33 msec, electronic shutter used	
VCCD Integration Time	447.2 msec	3
Temperature	40°C	
Light Source	Continuous red, green and blue LED illumination	4
Operation	Nominal operating voltages and timing	

1. Horizontal overclocking used.
2. Vertical overclocking used.
3. VCCD Integration Time = 1260 lines x Line Time, which is the total time a pixel will spend in the VCCD registers.
4. For monochrome sensor, only the green LED is used.

Table 10. DEFECT DEFINITIONS FOR TESTING AT 40°C

Description	Definition	Standard Grade	Grade 2	Notes
Major dark field defective bright pixel	PD_Tint = Mode A → Defect ≥ 191 mV or PD_Tint = Mode B → Defect ≥ 13.8 mV	80	80	1
Major bright field defective dark pixel	Defect ≥ 12%			
Minor dark field defective bright pixel	PD_Tint = Mode A → Defect ≥ 99 mV or PD_Tint = Mode B → Defect ≥ 7 mV	800	800	
Cluster defect	A group of 2 to 10 contiguous major defective pixels, but no more than 3 adjacent defects horizontally.	15	n/a	2
Cluster defect (grade 2)	A group of 2 to 10 contiguous major defective pixels	n/a	15	2
Column defect	A group of more than 10 contiguous major defective pixels along a single column	0	0	2

1. For the color device (KAI−08051−FBA), a bright field defective pixel deviates by 12% with respect to pixels of the same color.
2. Column and cluster defects are separated by no less than two (2) good pixels in any direction (excluding single pixel defects).

Downloaded from Arrow.com.

Table 11. OPERATION CONDITIONS FOR DEFECT TESTING AT 27°C

Description	Condition	Notes
Operational Mode	Two outputs, using VOUTa and VOUTc, continuous readout	
HCCD Clock Frequency	20 MHz	
Pixels Per Line	3520	1
Lines Per Frame	1360	2
Line Time	177.8 μsec	
Frame Time	241.8 msec	
Photodiode Integration Time (PD_Tint)	Mode A: PD_Tint = Frame Time = 241.8 msec, no electronic shutter used	
	Mode B: PD_Tint = 33 msec, electronic shutter used	
VCCD Integration Time	224.0 msec	3
Temperature	27°C	
Light Source	Continuous red, green and blue LED illumination	4
Operation	Nominal operating voltages and timing	

1. Horizontal overclocking used.
2. Vertical overclocking used.
3. VCCD Integration Time = 1260 lines x Line Time, which is the total time a pixel will spend in the VCCD registers.
4. For monochrome sensor, only the green LED is used.

Table 12. DEFECT DEFINITIONS FOR TESTING AT 27°C

Description	Definition	Standard Grade	Grade 2	Notes
Major dark field defective bright pixel	PD_Tint = Mode A → Defect ≥ 30 mV or PD_Tint = Mode B → Defect ≥ 4.6 mV	80	80	1
Major bright field defective dark pixel	Defect ≥ 12%			
Cluster defect	A group of 2 to 10 contiguous major defective pixels, but no more than 3 adjacent defects horizontally.	15	n/a	2
Cluster defect (grade 2)	A group of 2 to 10 contiguous major defective pixels	n/a	15	2
Column defect	A group of more than 10 contiguous major defective pixels along a single column	0	0	2

1. For the color device (KAI−08051−FBA), a bright field defective pixel deviates by 12% with respect to pixels of the same color.
2. Column and cluster defects are separated by no less than two (2) good pixels in any direction (excluding single pixel defects).

Defect Map

The defect map supplied with each sensor is based upon testing at an ambient (27°C) temperature. Minor point defects are not included in the defect map. All defective pixels are reference to pixel 1, 1 in the defect maps. See Figure 16: Regions of interest for the location of pixel 1,1.

Downloaded from Arrow.com.

TEST DEFINITIONS

Test Regions of Interest

Image Area ROI: Pixel (1, 1) to Pixel (3320, 2496)
Active Area ROI: Pixel (13, 13) to Pixel (3308, 2484)
Center ROI: Pixel (1611, 1199) to Pixel (1710, 1298)
Only the Active Area ROI pixels are used for performance and defect tests.

Overclocking

The test system timing is configured such that the sensor is overclocked in both the vertical and horizontal directions. See Figure 16 for a pictorial representation of the regions of interest.

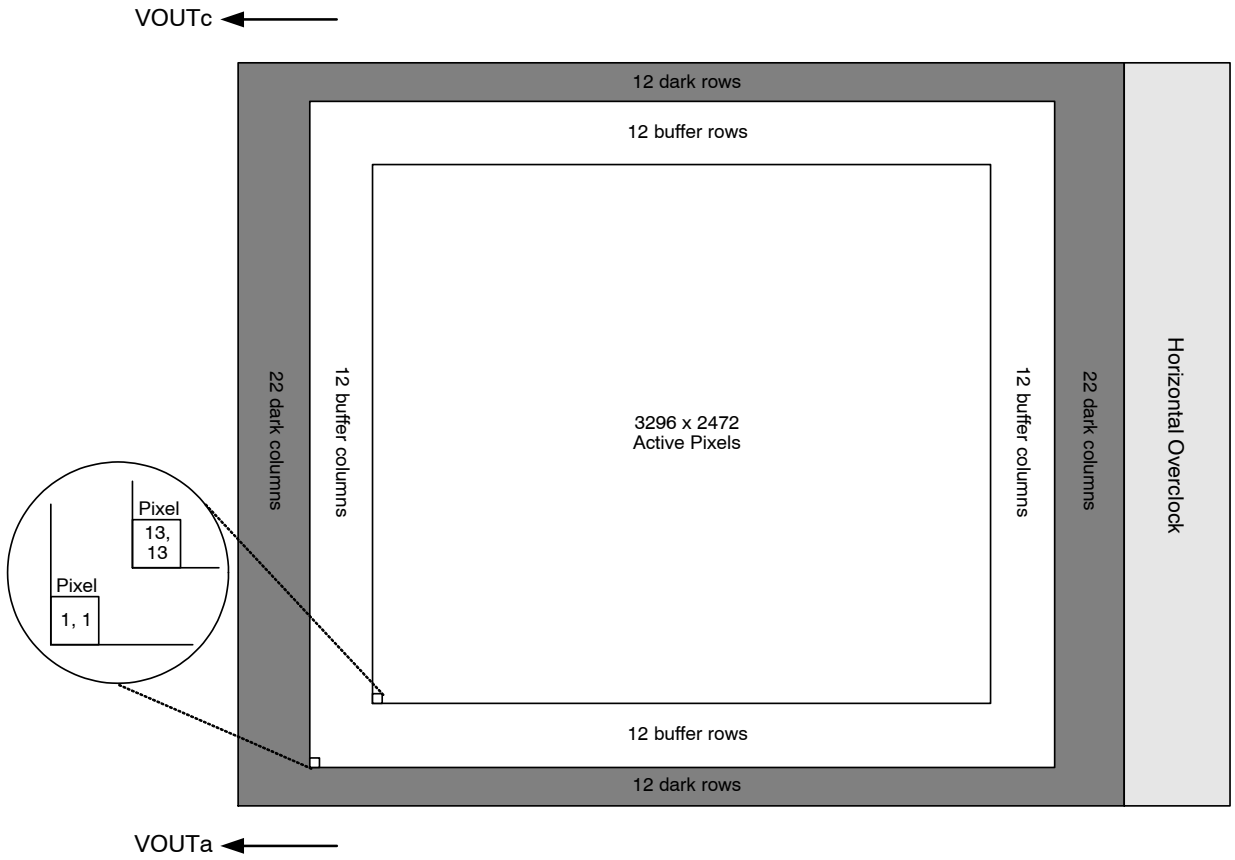

Figure 16. Regions of Interest

Downloaded from Arrow.com.

Tests

Dark Field Global Non−Uniformity

This test is performed under dark field conditions. The sensor is partitioned into 768 sub regions of interest, each of which is 103 by 103 pixels in size. The average signal level of each of the 768 sub regions of interest is calculated. The signal level of each of the sub regions of interest is calculated using the following formula:

Signal of ROI[i] = (ROI Average in counts − Horizontal overclock average in counts) * mV per count

Where i = 1 to 768. During this calculation on the 768 sub regions of interest, the maximum and minimum signal levels are found. The dark field global uniformity is then calculated as the maximum signal found minus the minimum signal level found.

Units: mVpp (millivolts peak to peak)

Global Non−Uniformity

This test is performed with the imager illuminated to a level such that the output is at 70% of saturation (approximately 546 mV). Prior to this test being performed the substrate voltage has been set such that the charge capacity of the sensor is 780 mV. Global non−uniformity is defined as

$$\text{GlobalNon−Uniformity} = 100 \times \left(\frac{\text{ActiveAreaStandardDeviation}}{\text{ActiveAreaSignal}}\right)$$

Units: %rms.

Active Area Signal = Active Area Average − Dark Column Average

Global Peak to Peak Non−Uniformity

This test is performed with the imager illuminated to a level such that the output is at 70% of saturation (approximately 546 mV). Prior to this test being performed the substrate voltage has been set such that the charge capacity of the sensor is 780 mV. The sensor is partitioned into 768 sub regions of interest, each of which is 103 by 103 pixels in size. The average signal level of each of the 768 sub regions of interest (ROI) is calculated. The signal level of each of the sub regions of interest is calculated using the following formula:

Signal of ROI[i] = (ROI Average in counts − Horizontal overclock average in counts) * mV per count

Where i = 1 to 768. During this calculation on the 768 sub regions of interest, the maximum and minimum signal levels are found. The global peak to peak uniformity is then calculated as:

$$\text{GlobalUniformity} = 100 \times \frac{\text{MaximumSignal} - \text{MinimumSignal}}{\text{ActiveAreaSignal}}$$

Units: %pp

Center Non−Uniformity

This test is performed with the imager illuminated to a level such that the output is at 70% of saturation (approximately 560 mV). Prior to this test being performed the substrate voltage has been set such that the charge capacity of the sensor is 780 mV. Defects are excluded for the calculation of this test. This test is performed on the center 100 by 100 pixels of the sensor. Center uniformity is defined as:

$$\text{Center ROI Uniformity} = 100 \times \left(\frac{\text{Center ROI Standard Deviation}}{\text{Center ROI Signal}}\right)$$

Units: %rms.

Center ROI Signal = Center ROI Average − Dark Column Average

Dark Field Defect Test

This test is performed under dark field conditions. The sensor is partitioned into 768 sub regions of interest, each of which is 103 by 103 pixels in size. In each region of interest, the median value of all pixels is found. For each region of interest, a pixel is marked defective if it is greater than or equal to the median value of that region of interest plus the defect threshold specified in the “Defect Definitions” section.

Bright Field Defect Test

This test is performed with the imager illuminated to a level such that the output is at approximately 546 mV. Prior to this test being performed the substrate voltage has been set such that the charge capacity of the sensor is 780 mV. The average signal level of all active pixels is found. The bright and dark thresholds are set as:

Dark defect threshold = Active Area Signal * threshold
Bright defect threshold = Active Area Signal * threshold

The sensor is then partitioned into 768 sub regions of interest, each of which is 103 by 103 pixels in size. In each region of interest, the average value of all pixels is found. For each region of interest, a pixel is marked defective if it is greater than or equal to the median value of that region of interest plus the bright threshold specified or if it is less than or equal to the median value of that region of interest minus the dark threshold specified.

Downloaded from Arrow.com.

Example for major bright field defective pixels:

- Average value of all active pixels is found to be 546 mV
- Dark defect threshold: 546 mV * 12 % = 66 mV
- Bright defect threshold: 546 mV * 12 % = 66 mV
- Region of interest #1 selected. This region of interest is pixels 13, 13 to pixels 115, 115.
  - Median of this region of interest is found to be 546 mV.
  - Any pixel in this region of interest that is ≥ (546 + 66 mV) 612 mV in intensity will be marked defective.
  - Any pixel in this region of interest that is ≤ (546 − 66 mV) 480 mV in intensity will be marked defective.
- All remaining 768 sub regions of interest are analyzed for defective pixels in the same manner.

Downloaded from Arrow.com.

OPERATION

Table 13. ABSOLUTE MAXIMUM RATINGS

Description	Symbol	Minimum	Maximum	Units	Notes
Operating Temperature	T_{OP}	−50	+70	°C	1
Humidity	RH	+5	+90	%	2
Output Bias Current	I_{out}		60	mA	3
Off−chip Load	CL		10	pF	

Stresses exceeding those listed in the Maximum Ratings table may damage the device. If any of these limits are exceeded, device functionality should not be assumed, damage may occur and reliability may be affected.

1. Noise performance will degrade at higher temperatures.
2. T = 25°C. Excessive humidity will degrade MTTF.
3. Total for all outputs. Maximum current is −15 mA for each output. Avoid shorting output pins to ground or any low impedance source during operation. Amplifier bandwidth increases at higher current and lower load capacitance at the expense of reduced gain (sensitivity).

Table 14. ABSOLUTE MAXIMUM VOLTAGE RATINGS BETWEEN PINS AND GROUND

Description	Minimum	Maximum	Units	Notes
VDDα, VOUTα	−0.4	15.5	V	1
RDα	−0.4	15.5	V	1
V1B, V1T	ESD − 0.4	ESD + 24.0	V	
V2B, V2T, V3B, V3T, V4B, V4T	ESD − 0.4	ESD + 14.0	V	
H1Sα, H1Bα, H2Sα, H2Bα, H2SLα, Rα, OGα	ESD − 0.4	ESD + 14.0	V	1
ESD	−10.0	0.0	V	
SUB	−0.4	40.0	V	2

1. α denotes a, b, c or d
2. Refer to Application Note *Using Interline CCD Image Sensors in High Intensity Visible Lighting Conditions.*

Power−Up and Power−Down Sequence

Adherence to the power−up and power−down sequence is critical. Failure to follow the proper power−up and power−down sequences may cause damage to the sensor.

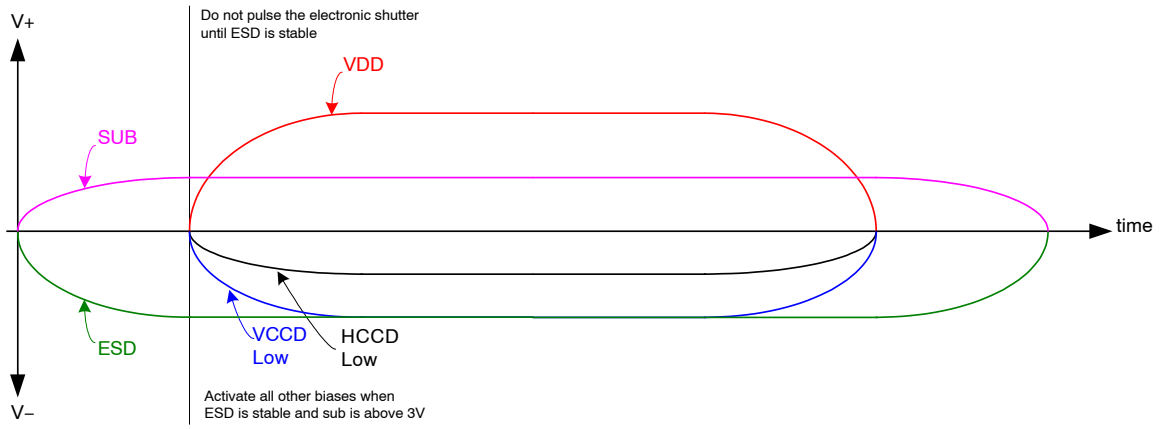

Figure 17. Power−Up and Power−Down Sequence

Notes:

1. Activate all other biases when ESD is stable and SUB is above 3 V
2. Do not pulse the electronic shutter until ESD is stable
3. VDD cannot be +15 V when SUB is 0 V
4. The image sensor can be protected from an accidental improper ESD voltage by current limiting the SUB current to less than 10 mA. SUB and VDD must always be greater than GND. ESD must always be less than GND. Placing diodes between SUB, VDD, ESD and ground will protect the sensor from accidental overshoots of SUB, VDD and ESD during power on and power off. See the figure below.

Downloaded from Arrow.com.

The VCCD clock waveform must not have a negative overshoot more than 0.4 V below the ESD voltage.

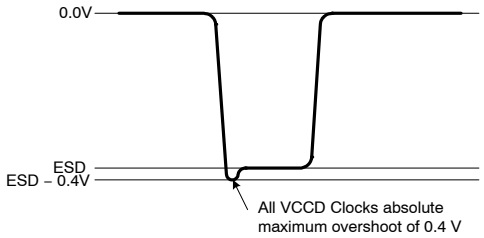

Figure 18.

Example of external diode protection for SUB, VDD and ESD. α denotes a, b, c or d

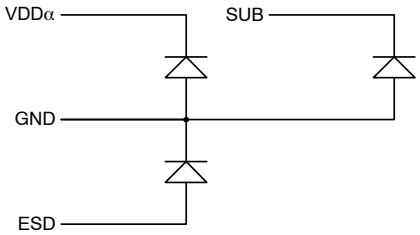

Figure 19.

Table 15. DC BIAS OPERATING CONDITIONS

Description	Pins	Symbol	Minimum	Nominal	Maximum	Units	Maximum DC Current	Notes
Reset Drain	RDα	RD	+11.8	+12.0	+12.2	V	10 μA	1
Output Gate	OGα	OG	−2.2	−2.0	−1.8	V	10 μA	1
Output Amplifier Supply	VDDα	VDD	+14.5	+15.0	+15.5	V	11.0 mA	1,2
Ground	GND	GND	0.0	0.0	0.0	V	−1.0 mA	
Substrate	SUB	VSUB	+5.0	VAB	VDD	V	50 μA	3, 8
ESD Protection Disable	ESD	ESD	−9.2	−9.0	Vx_L	V	50 μA	6, 7, 9
Output Bias Current	VOUTα	Iout	−3.0	−7.0	−10.0	mA		1, 4, 5

1. α denotes a, b, c or d
2. The maximum DC current is for one output. Idd = Iout + Iss. See Figure 20.
3. The operating value of the substrate voltage, VAB, will be marked on the shipping container for each device. The value of VAB is set such that the photodiode charge capacity is the nominal PNe (see Specifications).
4. An output load sink must be applied to each VOUT pin to activate each output amplifier.
5. Nominal value required for 40 MHz operation per output. May be reduced for slower data rates and lower noise.
6. Adherence to the power−up and power−down sequence is critical. See Power−Up and Power−Down Sequence section.
7. ESD maximum value must be less than or equal to V1_L + 0.4 V and V2_L + 0.4 V
8. Refer to Application Note *Using Interline CCD Image Sensors in High Intensity Visible Lighting Conditions*
9. Where Vx_L is the level set for V1_L, V2_L, V3_L, or V4_L in the application.

Downloaded from Arrow.com.

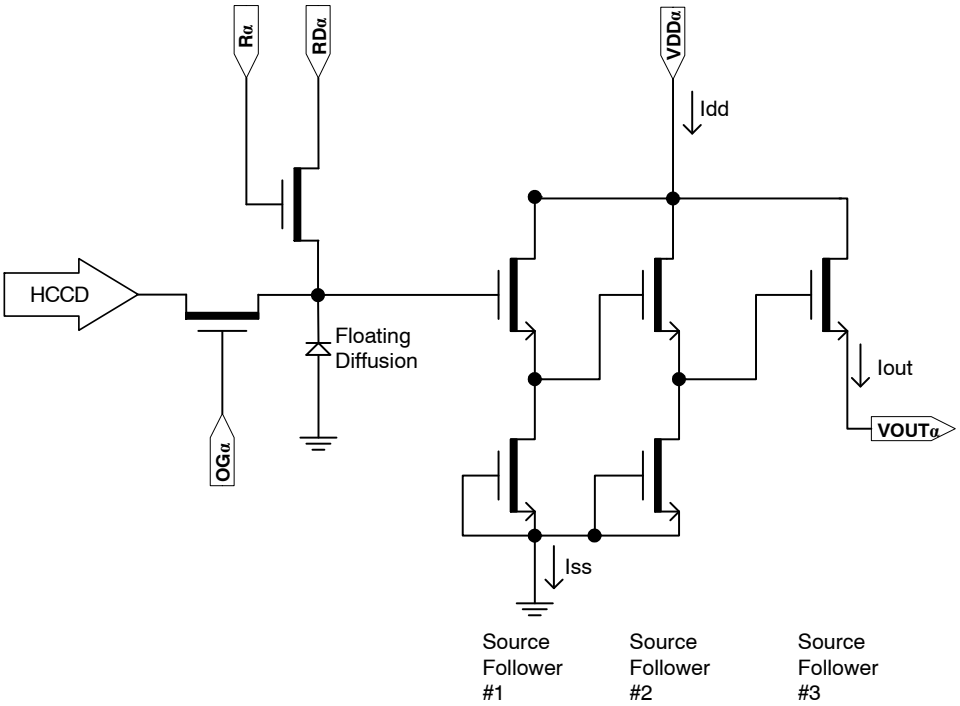

Figure 20. Output Amplifier

Downloaded from Arrow.com.

AC Operating Conditions

Table 16. CLOCK LEVELS

Description	Pins[1]	Symbol	Level	Minimum	Nominal	Maximum	Units	Capacitance[2]
Vertical CCD Clock, Phase 1	V1B, V1T	V1_L	Low	−8.2	−8.0	−7.8	V	43 nF (6)
		V1_M	Mid	−0.2	0.0	+0.2		
		V1_H	High	+11.5	+12.0	+12.5		
Vertical CCD Clock, Phase 2	V2B, V2T	V2_L	Low	−8.2	−8.0	−7.8	V	43 nF (6)
		V2_H	High	−0.2	0.0	+0.2		
Vertical CCD Clock, Phase 3	V3B, V3T	V3_L	Low	−8.2	−8.0	−7.8	V	43 nF (6)
		V3_H	High	−0.2	0.0	+0.2		
Vertical CCD Clock, Phase 4	V4B, V4T	V4_L	Low	−8.2	−8.0	−7.8	V	43 nF (6)
		V4_H	High	−0.2	0.0	+0.2		
Horizontal CCD Clock, Phase 1 Storage	H1Sα	H1S_L	Low	−5.2 (7)	−4.0	−3.8	V	280 pF (6)
		H1S_A	Amplitude	+3.8	+4.0	+5.2 (7)		
Horizontal CCD Clock, Phase 1 Barrier	H1Bα	H1B_L	Low	−5.2 (7)	−4.0	−3.8	V	190 pF (6)
		H1B_A	Amplitude	+3.8	+4.0	+5.2 (7)		
Horizontal CCD Clock, Phase 2 Storage	H2Sα	H2S_L	Low	−5.2 (7)	−4.0	−3.8	V	280 pF (6)
		H2S_A	Amplitude	+3.8	+4.0	+5.2 (7)		
Horizontal CCD Clock, Phase 2 Barrier	H2Bα	H2B_L	Low	−5.2 (7)	−4.0	−3.8	V	190 pF (6)
		H2B_A	Amplitude	+3.8	+4.0	+5.2 (7)		
Horizontal CCD Clock, Last Phase [3]	H2SLα	H2SL_L	Low	−5.2	−5.0	−4.8	V	20 pF (6)
		H2SL_A	Amplitude	+4.8	+5.0	+5.2		
Reset Gate	Rα	R_L [4]	Low	−3.5	−2.0	−1.5	V	16 pF (6)
		R_H	High	+2.5	+3.0	+4.0		
Electronic Shutter [5]	SUB	VES	High	+29.0	+30.0	+40.0	V	3 nF (6)

1. α denotes a, b, c or d
2. Capacitance is total for all like named pins
3. Use separate clock driver for improved speed performance.
4. Reset low should be set to −3 volts for signal levels greater than 40,000 electrons.
5. Refer to Application Note *Using Interline CCD Image Sensors in High Intensity Visible Lighting Conditions*
6. Capacitance values are estimated
7. If the minimum horizontal clock low level is used (−5.2 V), then the maximum horizontal clock amplitude should be used (5.2 V amplitude) to create a −5.2 V to 0.0 V clock. If a 5 volt clock driver is used, the horizontal low level should be set to −5.0 V and the high level should be a set to 0.0 V.

The figure below shows the DC bias (VSUB) and AC clock (VES) applied to the SUB pin. Both the DC bias and AC clock are referenced to ground.

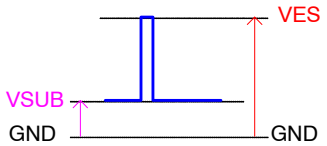

Figure 21.

Downloaded from Arrow.com.

Device Identification

The device identification pin (DevID) may be used to determine which ON Semiconductor 5.5 micron pixel interline CCD sensor is being used.

Table 17. DEVICE IDENTIFICATION

Description	Pins	Symbol	Minimum	Nominal	Maximum	Units	Maximum DC Current	Notes
Device Identification	DevID	DevID	8,000	10,000	12,000	Ω	TBD	1, 2, 3

1. Nominal value subject to verification and/or change during release of preliminary specifications.
2. If the Device Identification is not used, it may be left disconnected.
3. Values specified are for 40°C.

Recommended Circuit

Note that V1 must be a different value than V2.

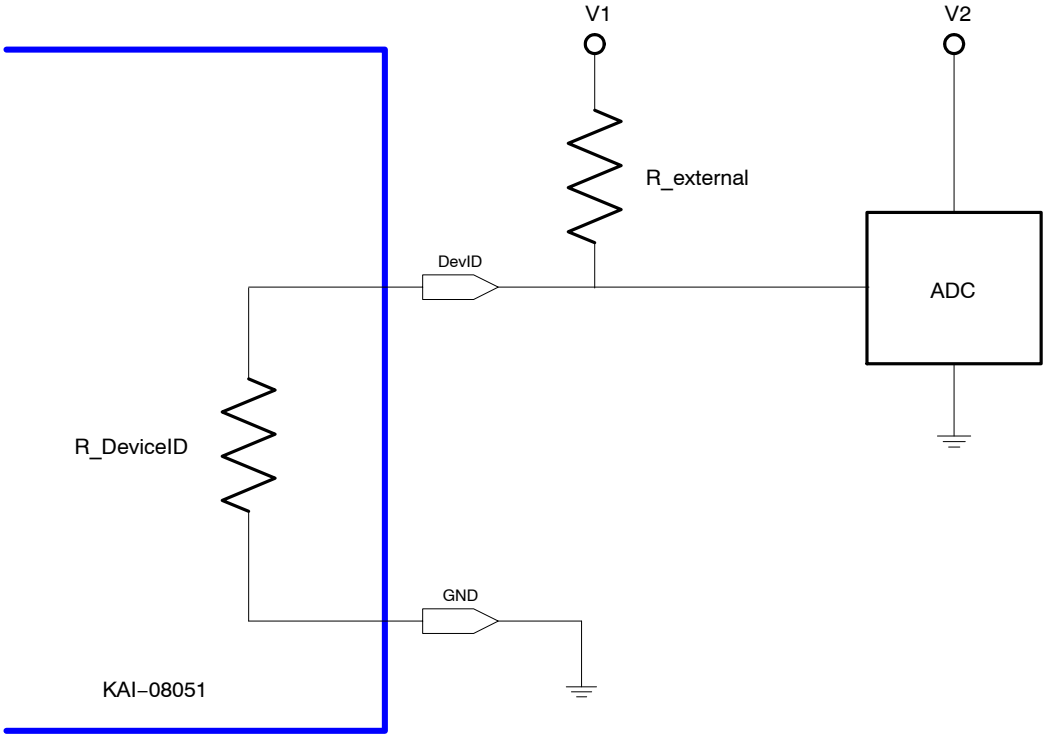

Figure 22. Device Identification Recommended Circuit

Downloaded from Arrow.com.

TIMING

Table 18. REQUIREMENTS AND CHARACTERISTICS

Description	Symbol	Minimum	Nominal	Maximum	Units	Notes
Photodiode Transfer	t_{pd}	1.0	–	–	μs	
VCCD Leading Pedestal	t_{3p}	4.0	–	–	μs	
VCCD Trailing Pedestal	t_{3d}	4.0	–	–	μs	
VCCD Transfer Delay	t_d	1.0	–	–	μs	
VCCD Transfer	t_v	2.0	–	–	μs	
VCCD Clock Cross−over	v_{VCR}	75		100	%	
VCCD Rise, Fall Times	t_{VR}, t_{VF}	5	–	10	%	2, 3
HCCD Delay	t_{hs}	0.2	–	–	μs	
HCCD Transfer	t_e	25.0	–	–	ns	
Shutter Transfer	t_{sub}	1.0	–	–	μs	
Shutter Delay	t_{hd}	1.0	–	–	μs	
Reset Pulse	t_r	2.5	–	–	ns	
Reset – Video Delay	t_{rv}	–	2.2	–	ns	
H2SL – Video Delay	t_{hv}	–	3.1	–	ns	
Line Time	t_{line}	45.5	–	–	μs	Dual HCCD Readout
		87.6	–	–		Single HCCD Readout
Frame Time	t_{frame}	57.4	–	–	ms	Quad HCCD Readout
		114.8	–	–		Dual HCCD Readout
		220.7	–	–		Single HCCD Readout

1. Refer to timing diagrams as shown in Figures 21, 22, 23, 24 and 25.
2. Refer to Figure 25: VCCD Clock Edge Alignment
3. Relative to the pulse width

Downloaded from Arrow.com.

Timing Diagrams

The timing sequence for the clocked device pins may be represented as one of seven patterns (P1−P7) as shown in the table below. The patterns are defined in Figure 21 and Figure 22. Contact ON Semiconductor Application Engineering for other readout modes.

Table 19.

Device Pin	Quad Readout	Dual Readout VOUTa, VOUTb	Dual Readout VOUTa, VOUTc	Single Readout VOUTa
V1T	P1T	P1B	P1T	P1B
V2T	P2T	P4B	P2T	P4B
V3T	P3T	P3B	P3T	P3B
V4T	P4T	P2B	P4T	P2B
V1B	P1B			
V2B	P2B			
V3B	P3B			
V4B	P4B			
H1Sa	P5			
H1Ba				
H2Sa2	P6			
H2Ba				
Ra	P7			
H1Sb	P5		P5	
H1Bb			P6	
H2Sb [2]	P6		P6	
H2Bb			P5	
Rb	P7		P7 [1] or Off [3]	P7 [1] or Off [3]
H1Sc	P5	P5 [1] or Off [3]	P5	P5 [1] or Off [3]
H1Bc				
H2Sc [2]	P6	P6 [1] or Off [3]	P6	P6 [1] or Off [3]
H2Bc				
Rc	P7	P7 [1] or Off [3]	P7	P7 [1] or Off [3]
H1Sd	P5	P5 [1] or Off [3]	P5	P5 [1] or Off [3]
H1Bd			P6	
H2Sd [2]	P6	P6 [1] or Off [3]	P6	P6 [1] or Off [3]
H2Bd			P5	
Rd	P7	P7 [1] or Off [3]	P7 [1] or Off [3]	P7 [1] or Off [3]

# Lines/Frame (Minimum)	1260	2520	1260	2520
# Pixels/Line (Minimum)	1693		3386	

1. For optimal performance of the sensor. May be clocked at a lower frequency. If clocked at a lower frequency, the frequency selected should be a multiple of the frequency used on the a and b register.
2. H2SLx follows the same pattern as H2Sx For optimal speed performance, use a separate clock driver.
3. Off = +5 V. Note that there may be operating conditions (high temperature and/or very bright light sources) that will cause blooming from the unused c/d register into the image area.

Downloaded from Arrow.com.

Photodiode Transfer Timing

A row of charge is transferred to the HCCD on the falling edge of V1 as indicated in the P1 pattern below. Using this timing sequence, the leading dummy row or line is combined with the first dark row in the HCCD. The “Last Line” is dependent on readout mode – either 632 or 1264 minimum counts required. It is important to note that, in general, the rising edge of a vertical clock (patterns P1−P4) should be coincident or slightly leading a falling edge at the same time interval. This is particularly true at the point where P1 returns from the high (3rd level) state to the mid−state when P4 transitions from the low state to the high state.

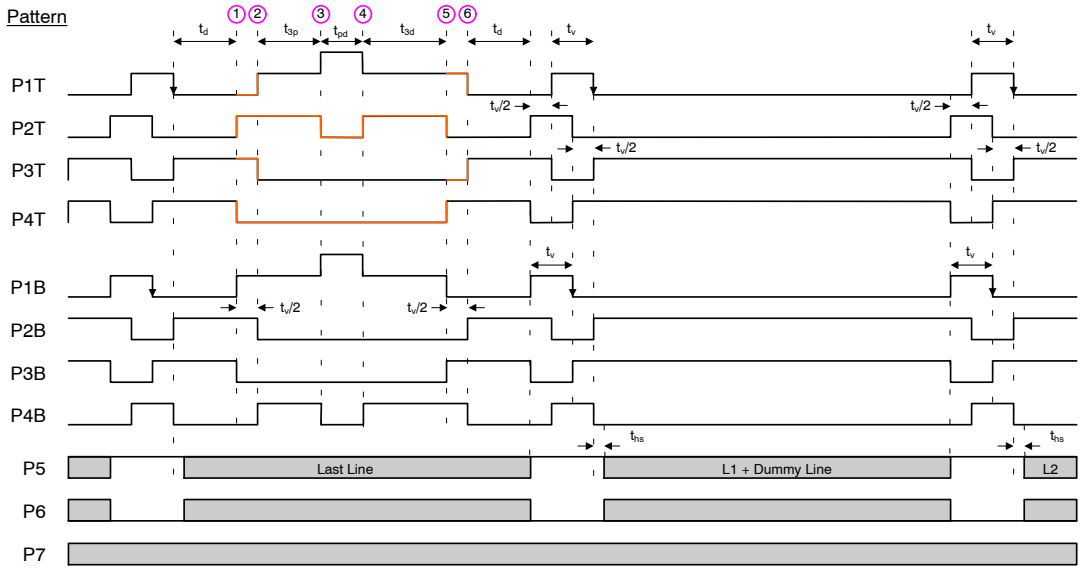

Figure 23. Photodiode Transfer Timing

Line and Pixel Timing

Each row of charge is transferred to the output, as illustrated below, on the falling edge of H2SL (indicated as P6 pattern). The number of pixels in a row is dependent on readout mode – either 853 or 1706 minimum counts required.

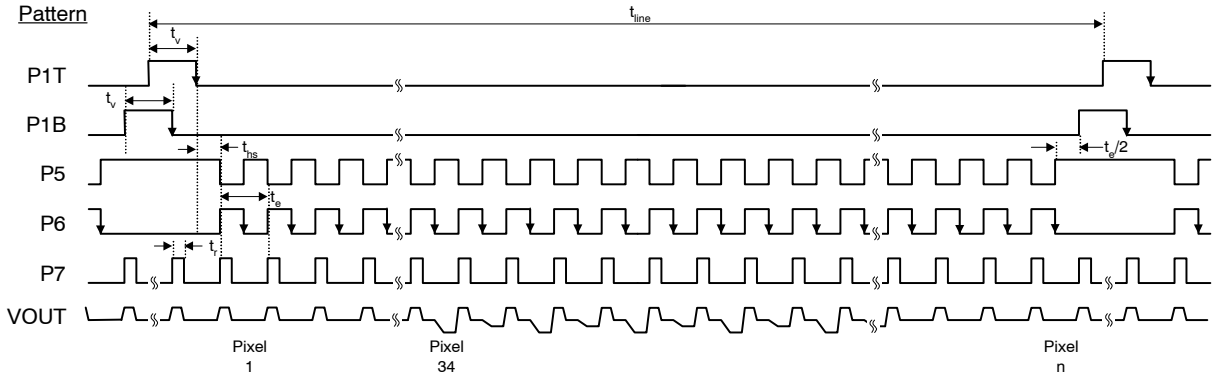

Figure 24. Line and Pixel Timing

Downloaded from Arrow.com.

Pixel Timing Detail

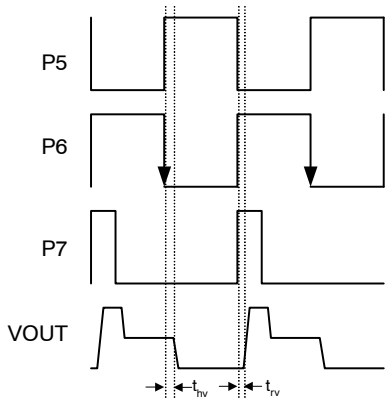

Figure 25. Pixel Timing Detail

Frame/Electronic Shutter Timing

The SUB pin may be optionally clocked to provide electronic shuttering capability as shown below.

The resulting photodiode integration time is defined from the falling edge of SUB to the falling edge of V1 (P1 pattern).

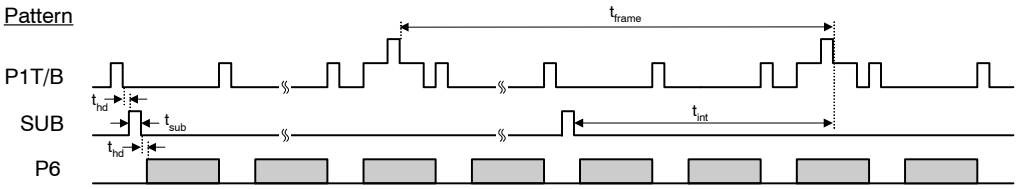

Figure 26. Frame/Electronic Shutter Timing

VCCD Clock Edge Alignment

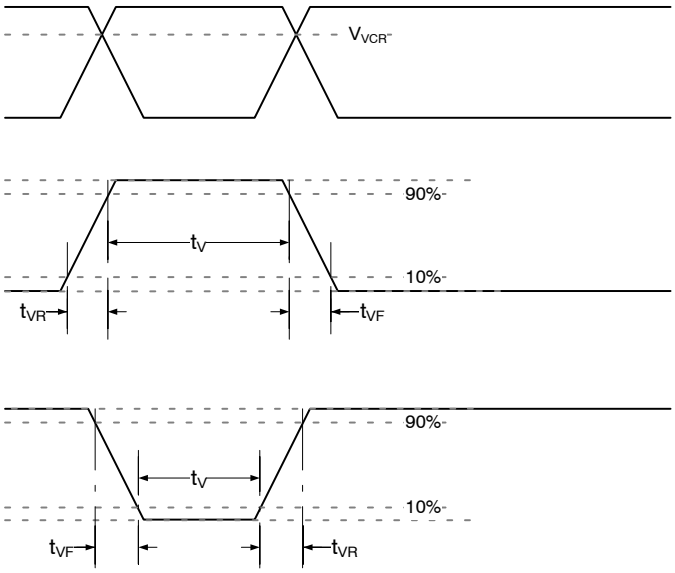

Figure 27. VCCD Clock Edge Alignment

Downloaded from Arrow.com.

Line and Pixel Timing − Vertical Binning by 2

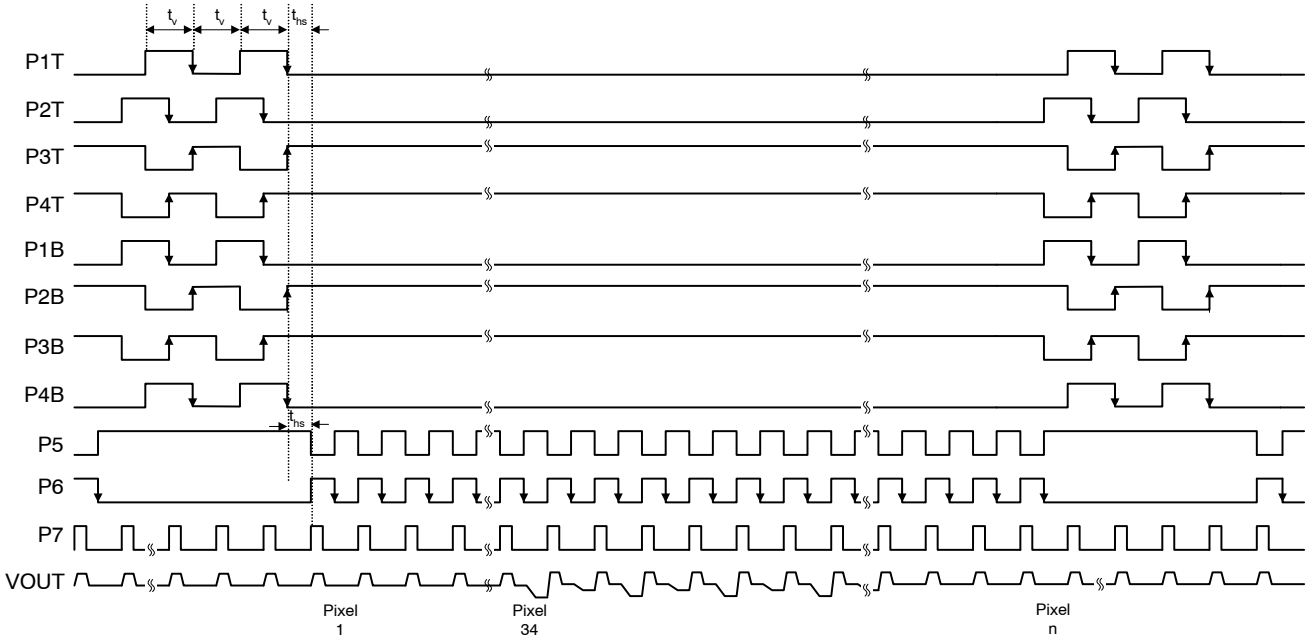

Figure 28. Line and Pixel Timing − Vertical Binning by 2

Downloaded from Arrow.com.

STORAGE AND HANDLING

Table 20. STORAGE CONDITIONS

Description	Symbol	Minimum	Maximum	Units	Notes
Storage Temperature	T_{ST}	−55	+80	°C	1
Humidity	RH	5	90	%	2

1. Long term storage toward the maximum temperature will accelerate color filter degradation.
2. T = 25°C. Excessive humidity will degrade MTTF.

For information on ESD and cover glass care and cleanliness, please download the *Image Sensor Handling and Best Practices* Application Note (AN52561/D) from www.onsemi.com.

For information on soldering recommendations, please download the Soldering and Mounting Techniques Reference Manual (SOLDERRM/D) from www.onsemi.com.

For quality and reliability information, please download the *Quality & Reliability* Handbook (HBD851/D) from www.onsemi.com.

For information on device numbering and ordering codes, please download the *Device Nomenclature* technical note (TND310/D) from www.onsemi.com.

For information on Standard terms and Conditions of Sale, please download Terms and Conditions from www.onsemi.com.

Downloaded from Arrow.com.

MECHANICAL INFORMATION

Completed Assembly

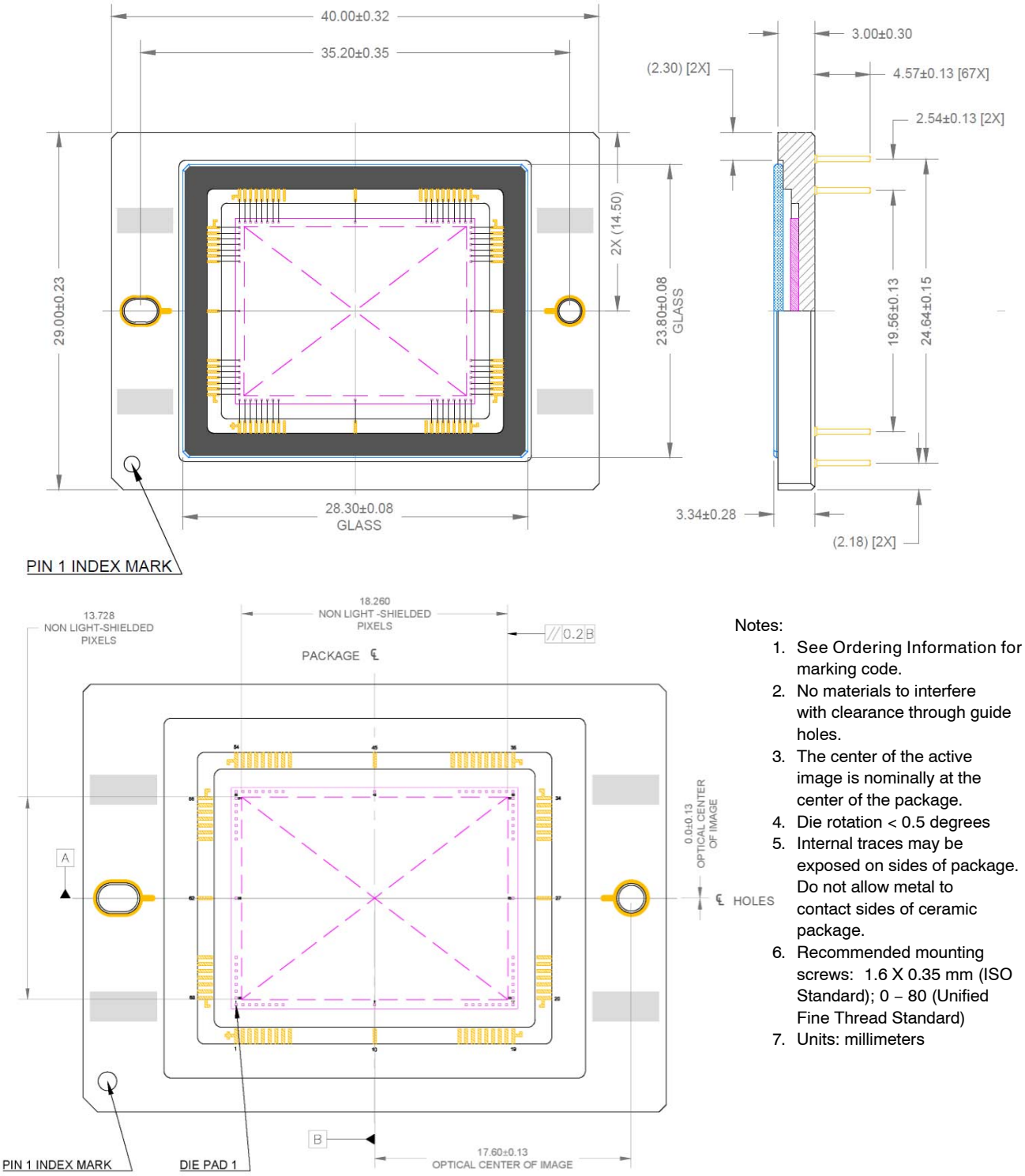

Notes:

1. See Ordering Information for marking code.
2. No materials to interfere with clearance through guide holes.
3. The center of the active image is nominally at the center of the package.
4. Die rotation < 0.5 degrees
5. Internal traces may be exposed on sides of package. Do not allow metal to contact sides of ceramic package.
6. Recommended mounting screws: 1.6 X 0.35 mm (ISO Standard); 0 − 80 (Unified Fine Thread Standard)
7. Units: millimeters

Figure 29. Completed Assembly, Top and Side View

Downloaded from Arrow.com.

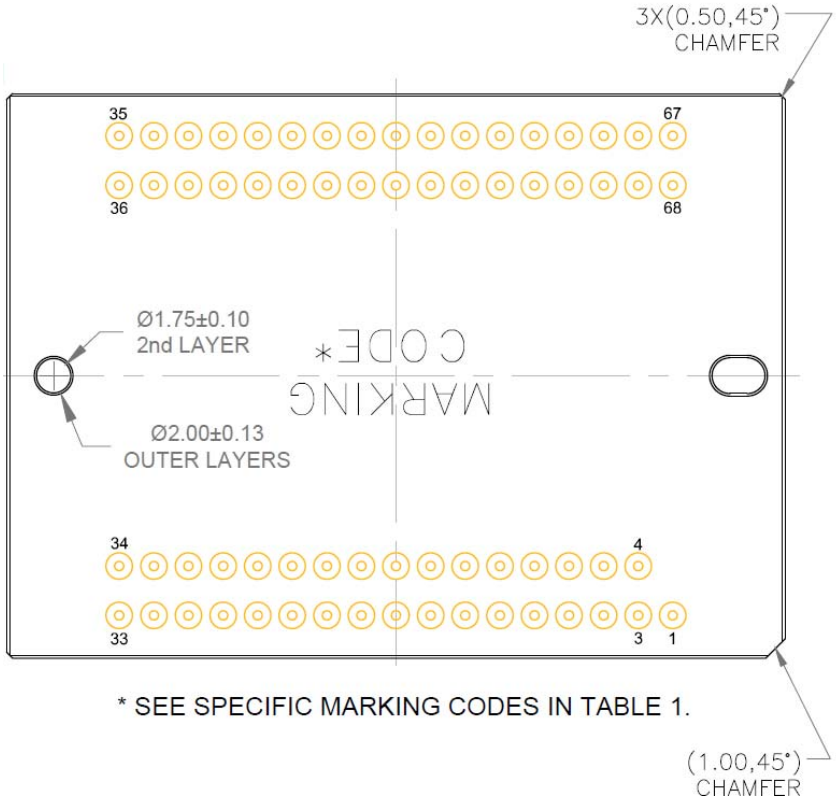

Notes:

1. See Ordering Information for marking code.
2. No materials to interfere with clearance through guide holes.
3. Recommended mounting screws: 1.6 X 0.35 mm (ISO Standard); 0 − 80 (Unified Fine Thread Standard)
4. Units: millimeters

Figure 30. Completed Assembly, Bottom View

Downloaded from Arrow.com.

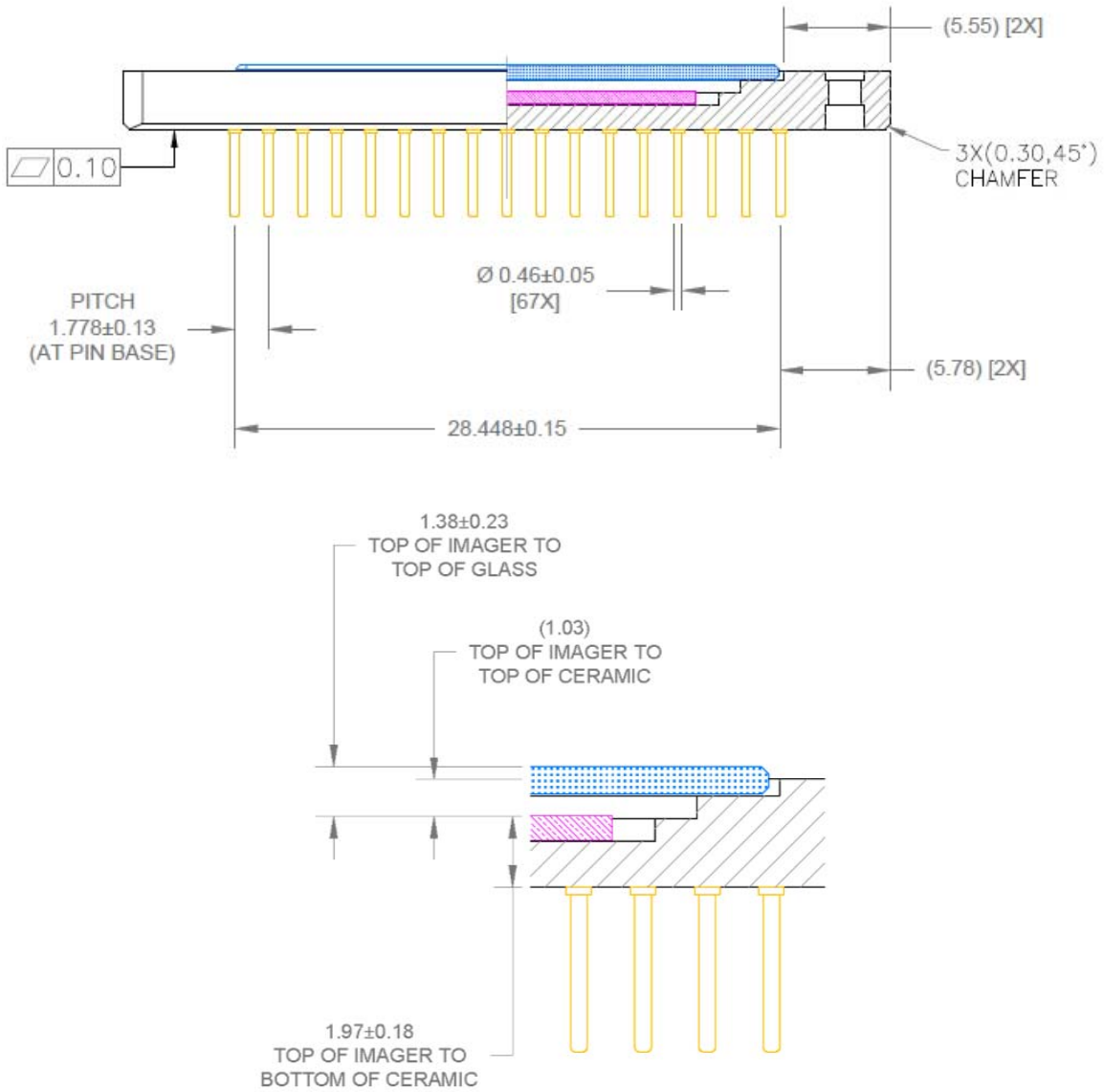

Notes:

1. No materials to interfere with clearance through guide holes.
2. Internal traces may be exposed on sides of package. Do not allow metal to contact sides of ceramic package.
3. Recommended mounting screws: 1.6 X 0.35 mm (ISO Standard); 0 − 80 (Unified Fine Thread Standard)
4. Units: millimeters

Figure 31. Completed Assembly, Side View with Glass and Die Detail

Downloaded from Arrow.com.

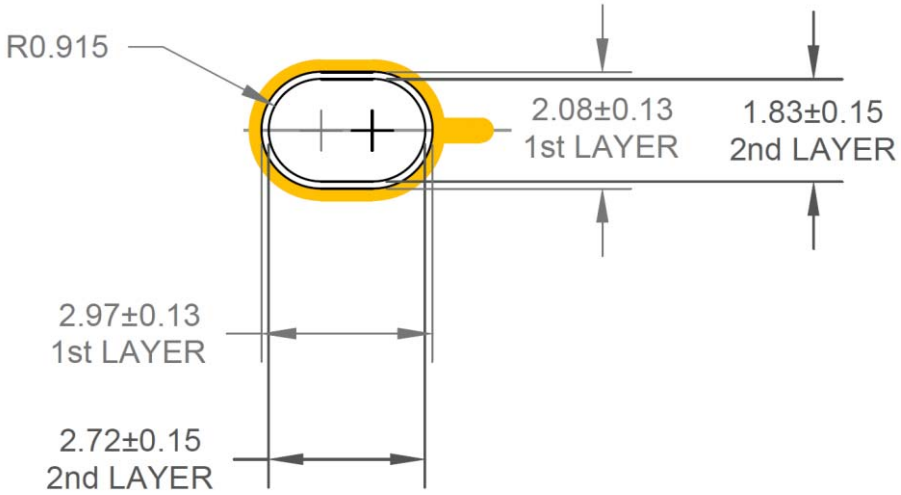

Notes:

1. No materials to interfere with clearance through guide holes.
2. Recommended mounting screws: 1.6 X 0.35 mm (ISO Standard); 0 − 80 (Unified Fine Thread Standard)
3. Units: millimeters

Figure 32. Mechanical Details, Oblong Guide Hole

Downloaded from Arrow.com.

MAR Cover Glass

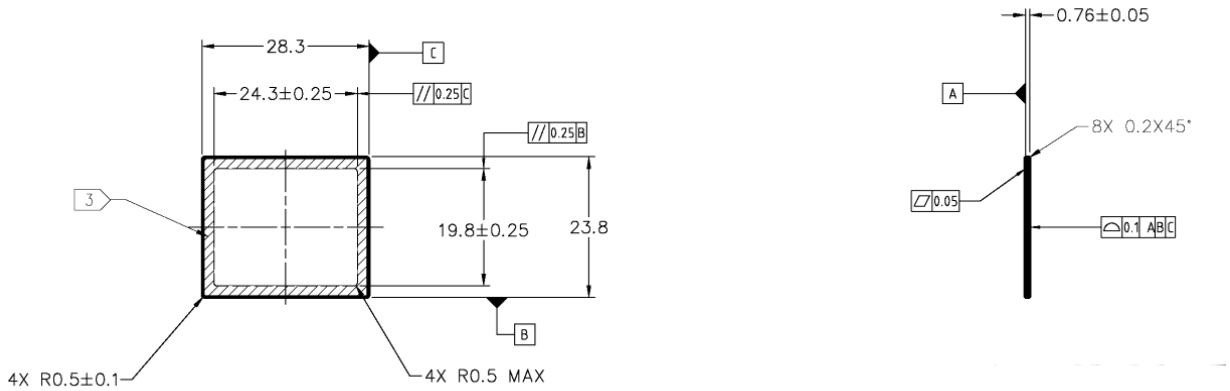

Notes:
1. Dust/Scratch count – 12 micron maximum
2. Units: MM

Figure 33. MAR Cover Glass

Clear Cover Glass

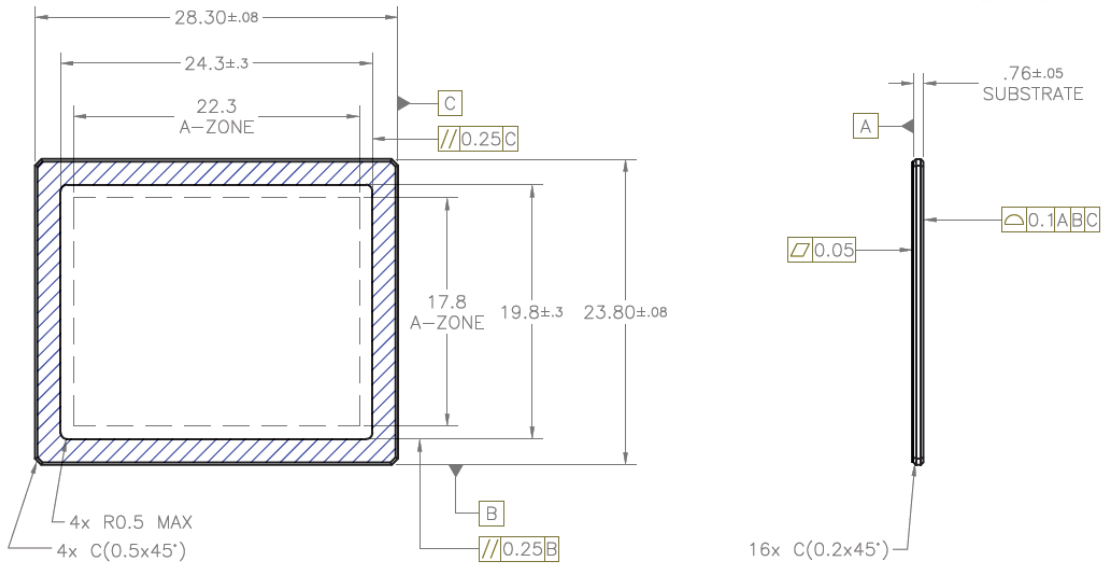

Notes:
1. Dust/Scratch count – 10 micron maximum
2. Units: MM

Figure 34. Clear Cover Glass

Downloaded from Arrow.com.

Cover Glass Transmission

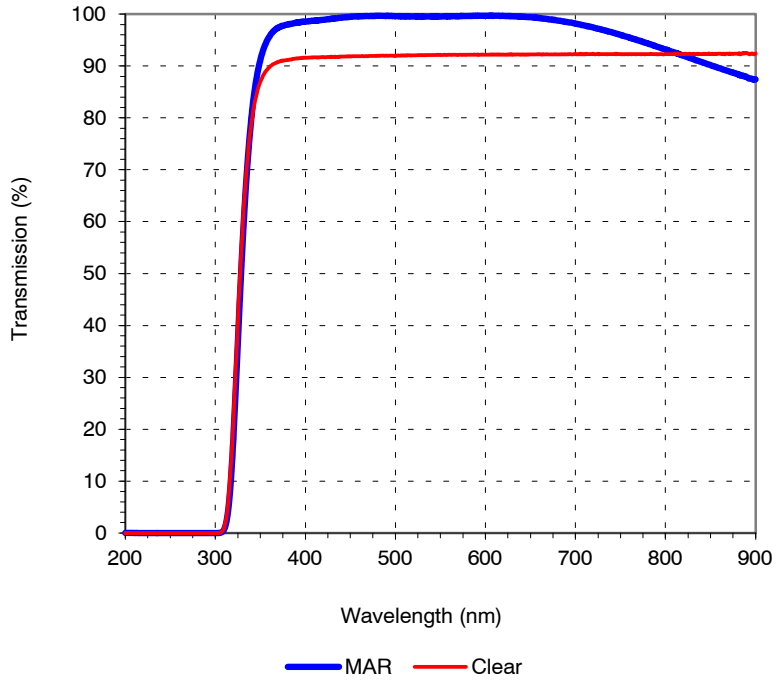

Figure 35. Cover Glass Transmission

ON Semiconductor and the ON are registered trademarks of Semiconductor Components Industries, LLC (SCILLC) or its subsidiaries in the United States and/or other countries. SCILLC owns the rights to a number of patents, trademarks, copyrights, trade secrets, and other intellectual property. A listing of SCILLC's product/patent coverage may be accessed at www.onsemi.com/site/pdf/Patent−Marking.pdf. SCILLC reserves the right to make changes without further notice to any products herein. SCILLC makes no warranty, representation or guarantee regarding the suitability of its products for any particular purpose, nor does SCILLC assume any liability arising out of the application or use of any product or circuit, and specifically disclaims any and all liability, including without limitation special, consequential or incidental damages. "Typical" parameters which may be provided in SCILLC data sheets and/or specifications can and do vary in different applications and actual performance may vary over time. All operating parameters, including "Typicals" must be validated for each customer application by customer's technical experts. SCILLC does not convey any license under its patent rights nor the rights of others. SCILLC products are not designed, intended, or authorized for use as components in systems intended for surgical implant into the body, or other applications intended to support or sustain life, or for any other application in which the failure of the SCILLC product could create a situation where personal injury or death may occur. Should Buyer purchase or use SCILLC products for any such unintended or unauthorized application, Buyer shall indemnify and hold SCILLC and its officers, employees, subsidiaries, affiliates, and distributors harmless against all claims, costs, damages, and expenses, and reasonable attorney fees arising out of, directly or indirectly, any claim of personal injury or death associated with such unintended or unauthorized use, even if such claim alleges that SCILLC was negligent regarding the design or manufacture of the part. SCILLC is an Equal Opportunity/Affirmative Action Employer. This literature is subject to all applicable copyright laws and is not for resale in any manner.

PUBLICATION ORDERING INFORMATION

LITERATURE FULFILLMENT:
Literature Distribution Center for ON Semiconductor
19521 E. 32nd Pkwy, Aurora, Colorado 80011 USA
Phone: 303−675−2175 or 800−344−3860 Toll Free USA/Canada
Fax: 303−675−2176 or 800−344−3867 Toll Free USA/Canada
Email: orderlit@onsemi.com

N. American Technical Support: 800−282−9855 Toll Free USA/Canada
Europe, Middle East and Africa Technical Support:
Phone: 421 33 790 2910
Japan Customer Focus Center
Phone: 81−3−5817−1050

ON Semiconductor Website: **www.onsemi.com**

Order Literature: http://www.onsemi.com/orderlit

For additional information, please contact your local Sales Representative

Downloaded from Arrow.com.