Recruitment information
site map

BN-23



Information on RoHS Directive

Solder heat resistance condition

Lens color

R G OR C

specification

Rating	AC 100 V to 125 V, AC 200 V to 250 V
Withstand voltage	AC 1500 V (1 minute)
Insulation resistance	DC 500 V, 100 MΩ or more
lifespan	Continuous lighting 20000 hours or more (discharge current at about 1.1 mA)
Body material	acrylic
Panel mounting method	Tightening nut
Main insulating material	PBT (UL 94 V - 0)
Terminal fittings	Soldering shared 187 tab terminal (t 0.5)
Lens color	R (red), G (green), OR (orange), C (transparent)
Mounting plate thickness	4.0 mm (MAX)
Nut tightening torque	Below 1.2 N · m
Nut width on two sides	18 mm
Usage notes	①Caution for soldering (Please solder the lug downwards or horizontally)

Notes

Neon bracket notes
General remarks

Order number BN - 23 - [Voltage specification] - [Lens color]

Order example BN - 23 - 1 - R (Voltage AC 100 ~ 125 V · Lens color red when ordered)

Order example BN - 23 - 2 - R (Voltage AC 200 - 250 V · Lens color red when ordered)

Product partial change notice

2012/06/01 Changing built-in protection resistance and neon ball
2010/03/25 Changing the rating label
2003/03/07 Changed to lead-free solder

Dimensional drawing

サトパーツショップ
Screw-less terminal Adoption Examples
Contact Us
To the top of the page

Downloaded from Arrow.com.

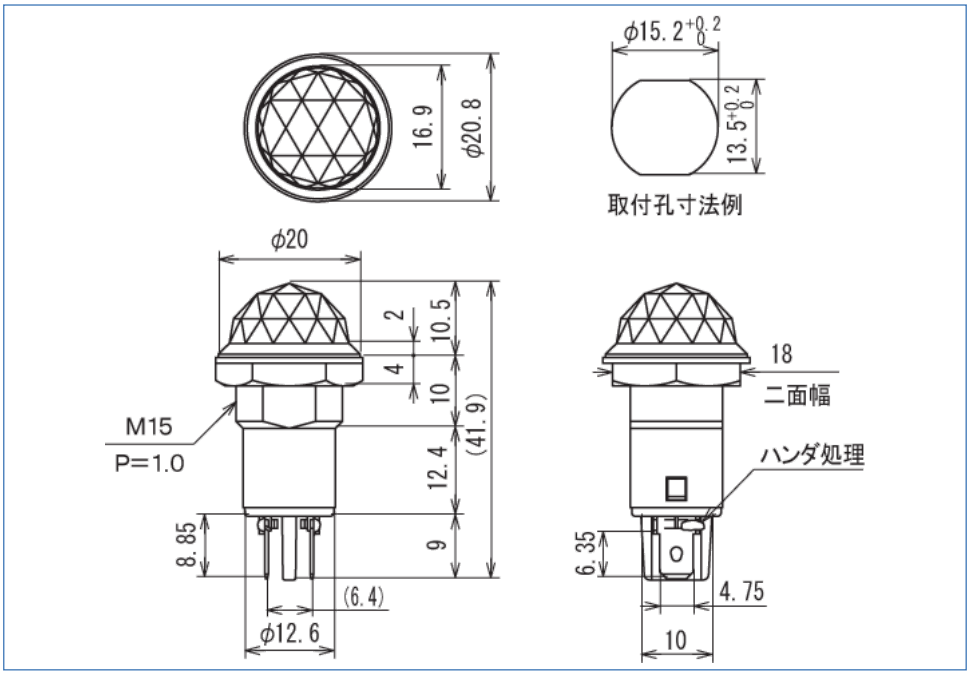

Unit: mm

DXF file / Environmentally hazardous substance report download

* Please download the DXF file usage agreement when downloading DXF file .

※ For environmentally hazardous substances report, commitment to the environment please visit.

Model number	DXF file	Environmentally hazardous substance report
BN-23	Download [History]	
BN-23-1-C		Download [History]
BN-23-1-G		Download [History]
BN-23-1-OR		Download [History]
BN-23-1-R		Download [History]
BN-23-2-C		Download [History]
BN-23-2-G		Download [History]
BN-23-2-OR		Download [History]
BN-23-2-R		Download [History]

Updated: 2016/07/19

All contents posted on this site are prohibited without permission and diversion without permission.

E-Mail: marketing@satoparts.co.jp
Customer consultation desk 0120-70-7215

Copyright (c) 2001-2017 SATO PARTS CO., LTD. All Rights Reserved.

サトパーツショップ
Screw-less terminal Adoption
Contact Us
To the top of the page

Downloaded from Arrow.com.