DATE	REV	ECN	APP'D. BY
1-16-15	B2	10207	TRM
2-29-16	B3	10573	TRM

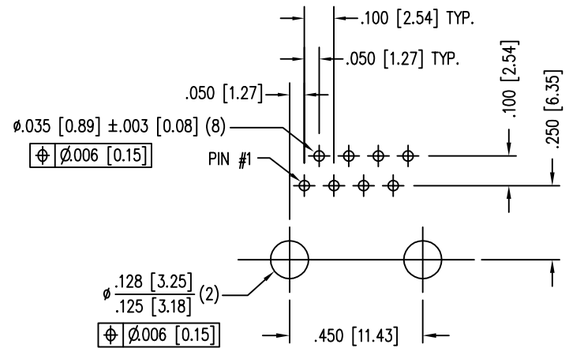

P.C.B. RECOMMENDED HOLE LAYOUT
SEEN FROM COMPONENT SIDE

ALL CENTERLINE DIMENSIONS ARE BASIC.

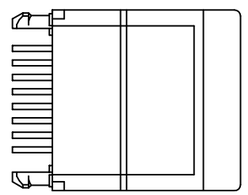

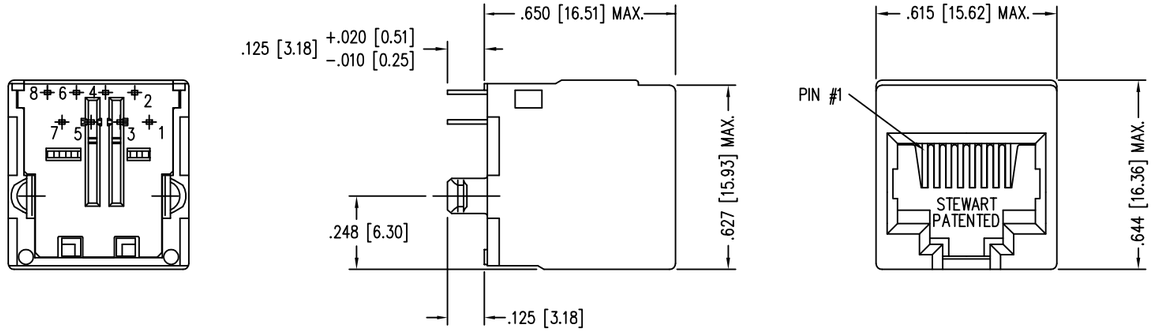

NOTES:

1. CONNECTOR MATERIALS:
   HOUSING: THERMOPLASTIC UL94 V-0
   CONTACTS: COPPER ALLOY
   CONTACT PLATING: SELECTIVE GOLD OR EQUIVALENT IN THE CONTACT AREA SEE CHART FOR PART NUMBER
2. FOR PRODUCT SPECIFICATIONS SEE PR026-01.
3. DIMENSIONS AND TOLERANCES COMPLY WITH TIA-1096 STANDARD.
4. DESIGNED FOR CATEGORY 5/5e APPLICATIONS.

50 MICRO-INCHES [1.27um]	SS-7188V-A-NF-50
30 MICRO-INCHES [0.76um]	SS-7188V-A-NF
CONTACT PLATING IN MATING AREA	PART NUMBER

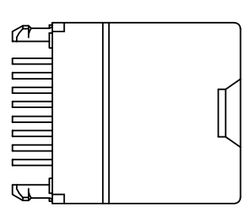

RoHS

THIRD ANGLE PROJECTION

DO NOT SCALE DRAWING

DRAWING IS SUBJECT TO CHANGE WITHOUT NOTICE

DIMENSIONS: INCHES [METRIC]

UNLESS OTHERWISE SPECIFIED TOLERANCES ARE ±.005 [0.13] ANGLES ARE ± 1°

SHEET NO. 1 OF 1

stewart CONNECTOR a bel group
11118 Susquehanna Trail South
Glen Rock, PA 17327-9199
(717) 235-7512
http://www.stewartconnector.com

TITLE: EIGHT CONTACT, EIGHT POSITION; CAT 5/5e VERTICAL MOUNT UNSHIELDED JACK, NON-FLANGE

THIS DRAWING AND THE SUBJECT MATTER SHOWN THEREON ARE CONFIDENTIAL AND THE PROPRIETARY PROPERTY OF STEWART CONNECTOR AND SHALL NOT BE REPRODUCED, COPIED, OR USED IN ANY MANNER WITHOUT PRIOR WRITTEN CONSENT OF STEWART CONNECTOR. ONE OR MORE U.S. PATENTS MAY APPLY TO THIS PRODUCT. FOR DETAILS, PLEASE VISIT: HTTP://BELFUSE.COM/STEWART/STEWART_PATENTS/

DRN BY:	TRM	DATE	1-27-03
APPD BY:	RGC	DATE	1-28-03
DWG NO.	CT710021	REV.	B3

AutoCAD

Downloaded from Arrow.com.