CUI Devices is now Same Sky! Learn More

MODEL: CDM-20008 | DESCRIPTION: SPEAKER

FEATURES

- metal frame
- PEN cone

RoHS

SPECIFICATIONS

parameter	conditions/description	min	typ	max	units
diameter			20		mm
depth			3.1		mm
input power	max. power: IEC-60268-5, filter 60 s on / 120 s off, 10 cycles at room temp		3.0	0.5	W
impedance	at 1 kHz, 1 V	6.8	8	9.2	Ω
resonant frequency	at 1 V	448	560	672	Hz
sound pressure level	0.3 W, 10 cm ave. at 1.0, 1.2, 1.5, 2.0 kHz	89	92	95	dB
response				7,000	Hz
distortion	at 1 kHz, 0.3 W			5	%
buzz, rattle, etc.	must be normal at sine wave 1.54 V				
magnet size	8.0 x 1.0 mm (Nd-Fe-B)				
operating temperature		-20		55	°C
weight			2.3		g
material	metal				
RoHS	yes				

SOLDERABILITY

parameter	conditions/description
hand soldering	370 ±10°C for 3 ±1 seconds

MECHANICAL DRAWING

units: mm
tolerance: ± 0.5mm

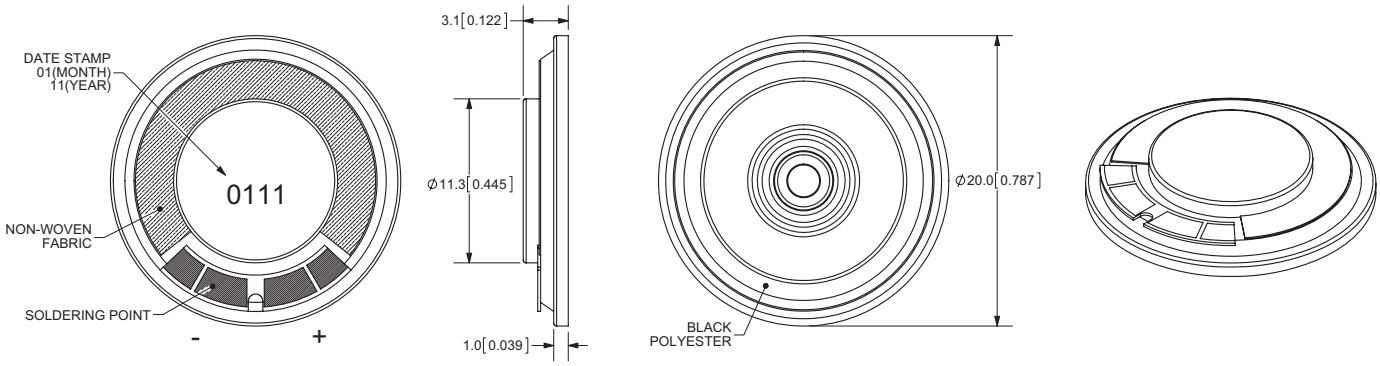

Downloaded from Arrow.com.

RESPONSE CURVES

Frequency Response Curve

Test Conditions: 0.3 W / 0.1 m

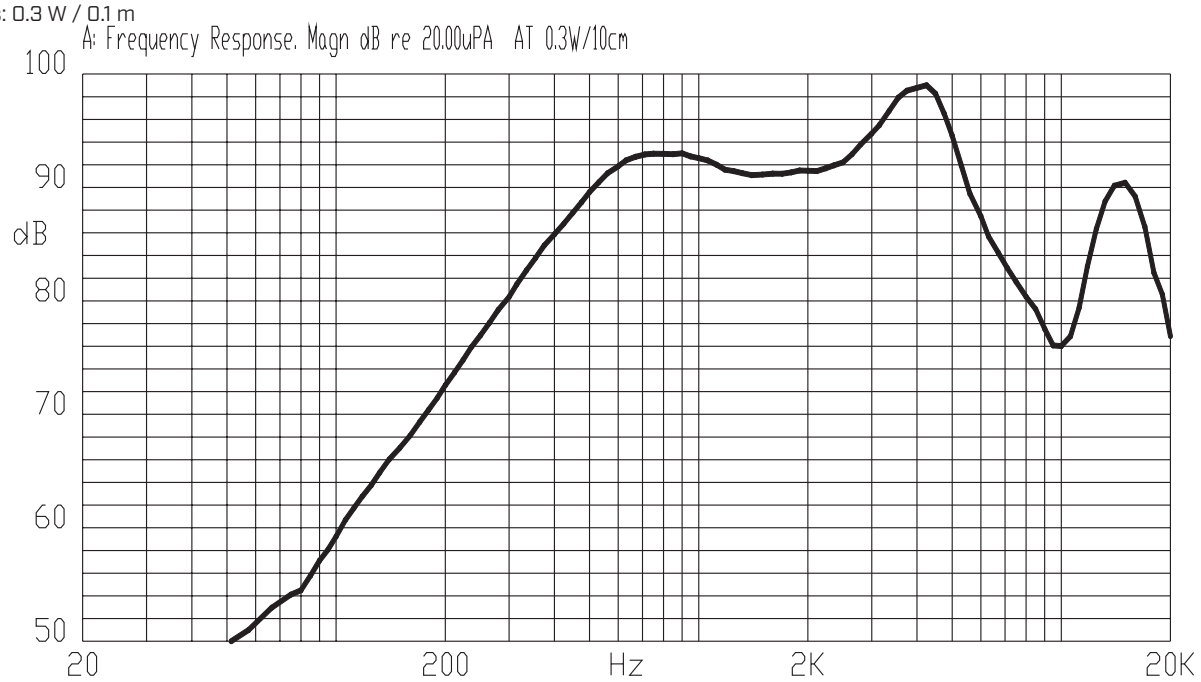

THIELE-SMALL PARAMETERS

parameter	conditions/description	typ
Mechanical Q Factor	Qms	2.0206
Electrical Q Factor	Qes	8.8014
Total Q Factor	Qts	1.6433
Compliance Equivalent Volume	Vas	0.0019

Notes: 2. Results represent typical performance in Free Air conditions.

Downloaded from Arrow.com.

PACKAGING

units: mm

Tray QTY: 80 pcs per tray
Carton Size: 355 x 242 x 300 mm
Carton QTY: 1,200 pcs per carton

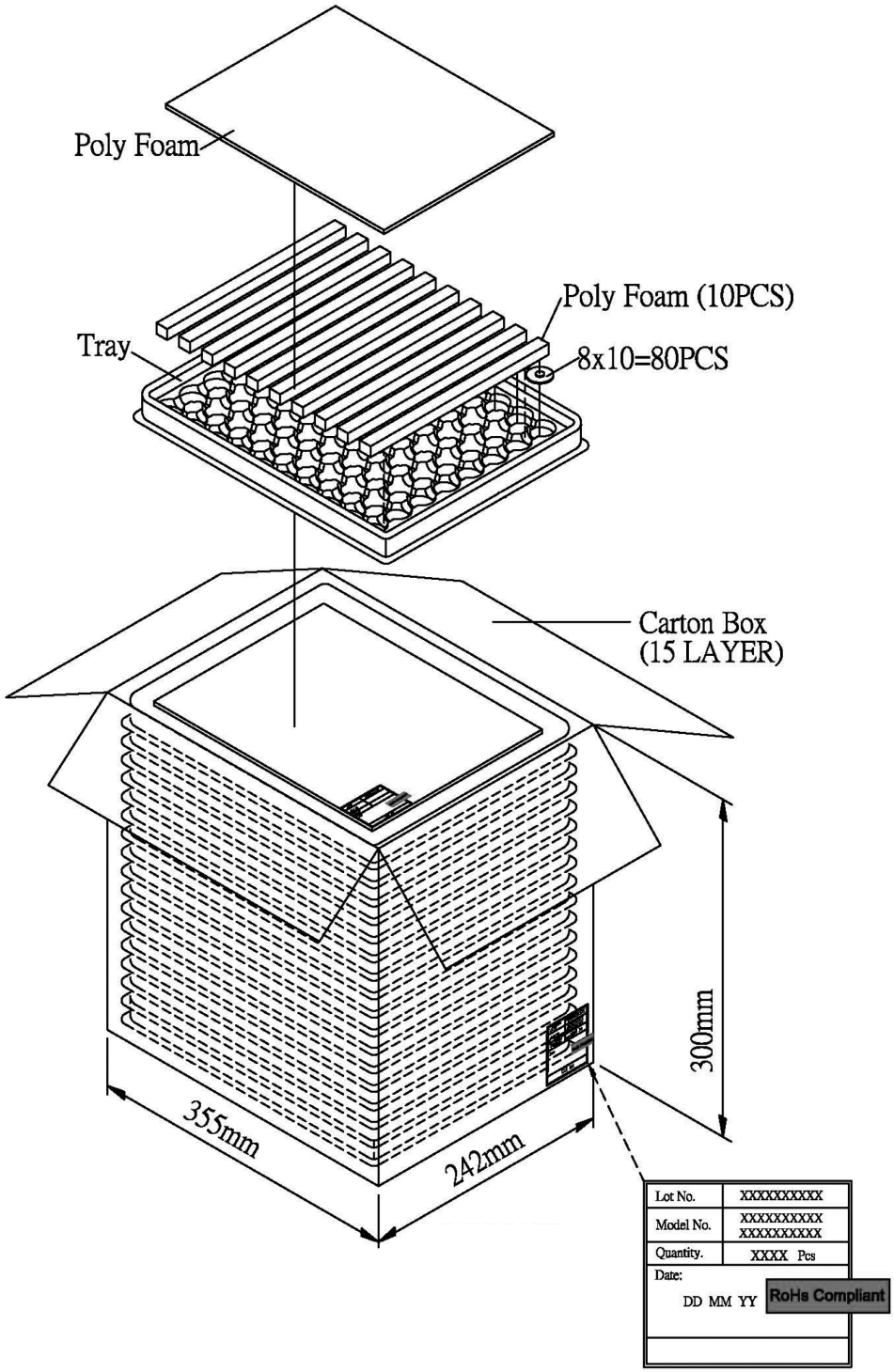

Downloaded from Arrow.com.

REVISION HISTORY

rev.	description	date
1.0	initial release	11/09/2011
1.01	updated datasheet	12/12/2017
1.02	updated packaging QTY, brand update	12/17/2019
1.03	logo, datasheet style update	08/05/2022
1.04	CUI Devices rebranded to Same Sky	09/11/2024
1.05	added Thiele-Small Parameters	02/26/2025

The revision history provided is for informational purposes only and is believed to be accurate.

Same Sky offers a one (1) year limited warranty. Complete warranty information is listed on our website.

Same Sky reserves the right to make changes to the product at any time without notice. Information provided by Same Sky is believed to be accurate and reliable. However, no responsibility is assumed by Same Sky for its use, nor for any infringements of patents or other rights of third parties which may result from its use.

Same Sky products are not authorized or warranted for use as critical components in equipment that requires an extremely high level of reliability. A critical component is any component of a life support device or system whose failure to perform can be reasonably expected to cause the failure of the life support device or system, or to affect its safety or effectiveness.

Downloaded from Arrow.com.