THIS DRAWING IS UNPUBLISHED. RELEASED FOR PUBLICATION -,- .
© COPYRIGHT 2011 BY TYCO ELECTRONICS CORPORATION. ALL RIGHTS RESERVED.

LOC	DIST
DW	—

REVISIONS

P	LTR	DESCRIPTION	DATE	DWN	APVD
	B2	REVISED (ECR-14-003928)	19MAR14	SW	SC

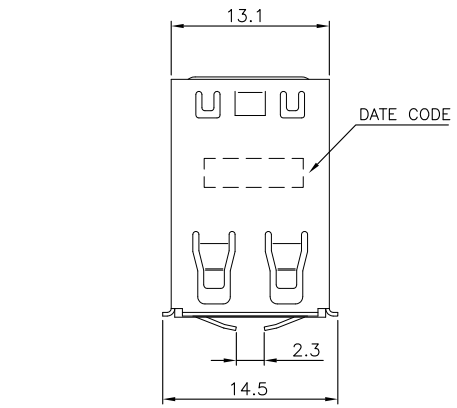

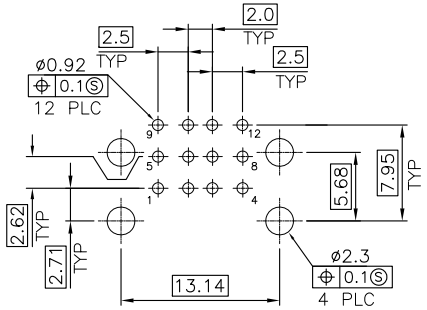

RECOMMENDED P.C.B LAYOUT
TOLERANCE: ±0.05

NOTES:

1. MATERIAL:
   HOUSING: THERMOPLASTIC (PA6T) WITH 30% GF, UL 94V-0,
   COLOR: SEE TABLE.
   CONTACTS: PHOSPHOR BRONZE.
   FRONT SHELL: PHOSPHOR BRONZE.
   REAR SHELL: SPCC.
   SPRING: PHOSPHOR BRONZE.

2. FINISH:
   CONTACTS: GOLD PLATED (SEE TABLE) ON CONTACT AREA,
   2.54um[100u"] MIN. BRIGHT-TIN PLATING ON SOLDERTAILS,
   1.27um [50u"] MIN. NICKEL UNDERPLATED OVER ALL.
   FRONT SHELL: 2.54um[100u"] MIN. BRIGHT-TIN PLATING,
   1.27um [50u"] MIN. NICKEL UNDERPLATED OVER ALL.
   REAR SHELL: 1.27um [50u"] MIN. NICKEL PLATING.
   SRIING: 1.27um [50u"] MIN. NICKEL PLATING.

3. RECOMMENDED PCB THICKNESS: 1.6mm.

4. WAVE SOLDER CAPABLE TO 265°C PER TE TEST SPEC.
   109-202, CONDITION B.

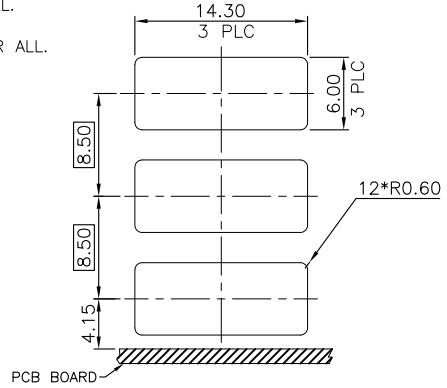

MOUNTING PANEL CUTOUT

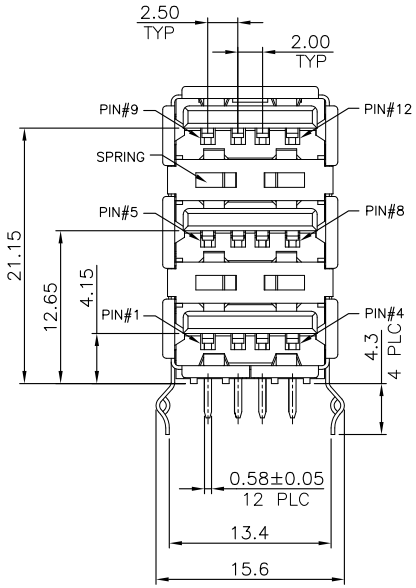

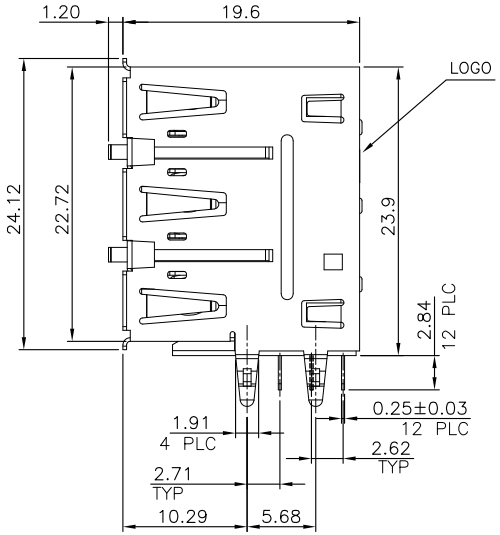

OBSOLETE	~~BEIGE (726C)~~	~~0.762um (30u")~~	~~1775615-8~~
OBSOLETE	~~BLACK (426C)~~	~~0.762um (30u")~~	~~1775615-7~~
OBSOLETE	~~BEIGE (726C)~~	~~0.381um (15u")~~	~~1775615-6~~
OBSOLETE	~~BLACK (426C)~~	~~0.381um (15u")~~	~~1775615-5~~
OBSOLETE	~~BEIGE (726C)~~	~~0.127um (5u")~~	~~1775615-4~~
OBSOLETE	~~BLACK (426C)~~	~~0.127um (5u")~~	~~1775615-3~~
OBSOLETE	~~BEIGE (726C)~~	~~0.0254um (1u")~~	~~1775615-2~~
	BLACK (426C)	0.0254um (1u")	1775615-1
	HOUSHING COLOR	MIN. GOLD THICKNESS	PART NUMBER

THIS DRAWING IS A CONTROLLED DOCUMENT.

DIMENSIONS: mm

TOLERANCES UNLESS OTHERWISE SPECIFIED:

0 PLC	± -
1 PLC	± 0.30
2 PLC	± 0.25
3 PLC	± 0.20
4 PLC	± -
ANGLES	± 3'

MATERIAL: SEE NOTE

FINISH: SEE NOTE

DWN	H. HUANG	21MAR2007
CHK	S. HOU	21MAR2007
APVD	W.J. KE	21MAR2007
PRODUCT SPEC	108-57519	
APPLICATION SPEC	—	
WEIGHT	9.2 GRAMS	

TE Connectivity

NAME: TRIPLE STACKED USB, A TYPE R/A, RECEPTACLE, DIP CONNECTOR

SIZE	CAGE CODE	DRAWING NO	RESTRICTED TO
A3	00779	C-1775615	—

CUSTOMER DRAWING | SCALE — | SHEET 1 OF 2 | REV B2

1470-19 (1/08)

Downloaded from Arrow.com.

THIS DRAWING IS UNPUBLISHED. RELEASED FOR PUBLICATION -,- .
© COPYRIGHT 2011 BY TYCO ELECTRONICS CORPORATION. ALL RIGHTS RESERVED.

LOC	DIST
DW	—

REVISIONS

P	LTR	DESCRIPTION	DATE	DWN	APVD
		SEE SHEET 1.			

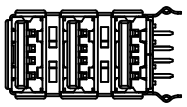

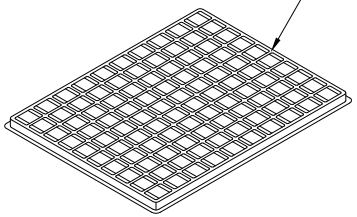

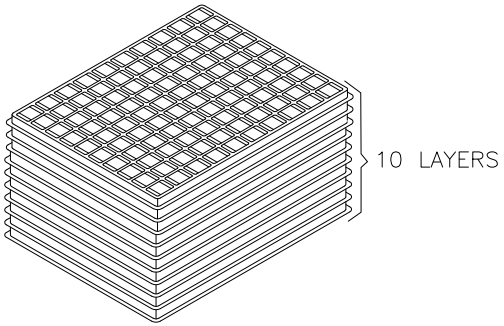

NOTES:

1. DIMENSION:
   TRAY: L= 360, W=280, H=25
   SHIPPING CARTON: L= 375, W=295, H=210

2 QUANTITY: (SEE TABLE)

3. CARTON WEIGHT: (SEE TABLE)

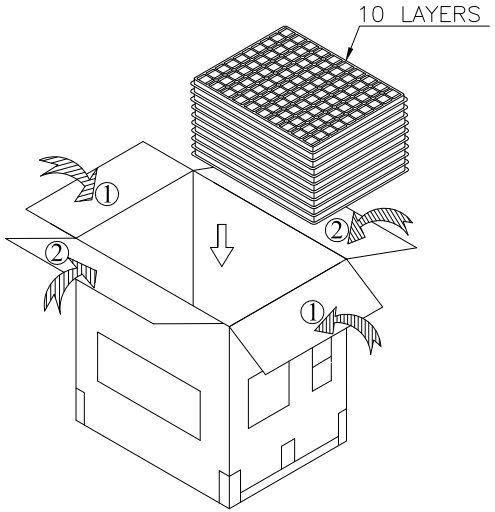

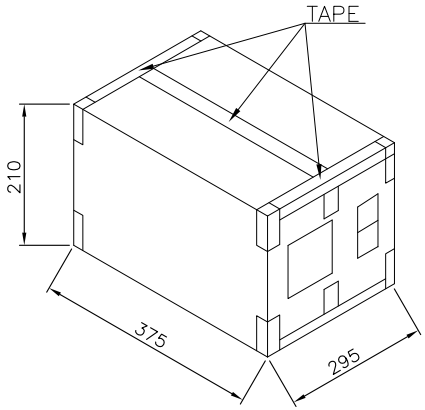

13.0 Kg	12.0 Kg	100	10	1000 PCS
GROSS WEIGHT	NET WEIGHT	PCS/TRAY	TRAYS /CARTON	QUANTITY

THIS DRAWING IS A CONTROLLED DOCUMENT.

DIMENSIONS: mm

TOLERANCES UNLESS OTHERWISE SPECIFIED:
0 PLC ± –
1 PLC ± –
2 PLC ± –
3 PLC ± –
4 PLC ± –
ANGLES ± –

MATERIAL –

FINISH –

DWN –
CHK –
APVD –
PRODUCT SPEC –
APPLICATION SPEC –
WEIGHT –

TE Connectivity

NAME
TRIPLE STACKED USB, A TYPE
R/A, RECEPTACLE, DIP CONNECTOR

SIZE	CAGE CODE	DRAWING NO	RESTRICTED TO
A3	00779	C-1775615	—

CUSTOMER DRAWING | SCALE — | SHEET 2 OF 2 | REV B2

1470-19 (1/08)

Downloaded from Arrow.com.