TRACO POWER

AC/DC Power Supply

TXM 035 Series, 35 Watt

Not recommended for new designs

- **Very compact metal cased power supplies**
- **High operating temperature up to 70°C**
- **Low no load power consumption <0.5W**
- **Screw terminal block**
- **No internal fan**
- **Universal AC input, full range**
- **Withstand 300 VAC surge input for 5 s**
- **Adjustable output voltage**
- **3-year product warranty**



UL 62368-1 IEC 62368-1

The TXM 035 series of 35 Watt is a family of enclosed AC/DC power supplies designed for cost critical applications. With a low profile metal case and screw terminal block connections, they are easy to install in any equipment. There are five models of single output voltages from 5 VDC to 48 VDC. These power supplies have universal input and comply with European EMC standards and the Low Voltage Directive (LVD).

Models

Order Code	Output Power max.	Output Voltage nom. (adjustable)	Output Current max.	Efficiency typ.
TXM 035-105 *	30 W	5 VDC (4.75 - 5.5 VDC)	6'000 mA	80 %
TXM 035-112 *	36 W	12 VDC (11.4 - 13.2 VDC)	3'000 mA	84 %
TXM 035-115 *		15 VDC (14.25 - 16.5 VDC)	2'400 mA	86 %
TXM 035-124 *		24 VDC (22.8 - 26.4 VDC)	1'500 mA	87 %
TXM 035-148 *		48 VDC (45.6 - 52.8 VDC)	750 mA	88 %

Note * Not recommended for new designs

Downloaded from Arrow.com.

Input Specifications

Input Voltage	- AC Range	Operational Range:	85 - 264 VAC (Full Range)
		Rated Range:	100 - 240 VAC (Full Range)
	- DC Range	Operational Range:	120 - 375 VDC (Designed for, no certification)
		Polarity:	irrelevant
			(Surge voltage (5 s max.): 300 VAC max.)
Input Frequency		Operational Range:	47 - 63 Hz
		Certified:	50/60 Hz
Power Consumption	- No load & Vin = 230 VAC		500 mW max.
	- No load & Vin = 115 VAC		500 mW max.
Input Current	- Full load & Vin = 115 VAC		1'000 mA max.
Input Inrush Current	- At 230 VAC		50 A max.
Recommended Input Fuse			(The need of an external fuse has to be assessed in the final application.)

Output Specifications

Output Voltage Adjustment			–5% to +10% (By trim potentiometer) Output power must not exceed rated power!
Voltage Set Accuracy			±3% max.
Regulation	- Input Variation (Vmin - Vmax)		0.5% max.
	- Load Variation (0 - 100%)		1% max.
Ripple and Noise (20 MHz Bandwidth)		5 VDC model:	50 mVp-p max. (w/ 0.1 µF || 10 µF)
		12 VDC model:	80 mVp-p max. (w/ 0.1 µF || 10 µF)
		15 VDC model:	120 mVp-p max. (w/ 0.1 µF || 10 µF)
		24 VDC model:	120 mVp-p max. (w/ 0.1 µF || 10 µF)
		48 VDC model:	180 mVp-p max. (w/ 0.1 µF || 10 µF)
Minimum Load			Not required
Temperature Coefficient			±0.03 %/K max.
Hold-up Time	- At 230 VAC		20 ms min.
	- At 115 VAC		10 ms min.
Start-up Time	- At 230 VAC		1'000 ms max.
Start-up Overshoot Voltage			5% max.
Short Circuit Protection			Continuous, Automatic recovery
Output Current Limitation			105 - 150% of Iout max.
Overvoltage Protection			110 - 150% of Vout nom.
Transient Response	- Response Deviation		9% max. (75% to 100% Load Step)
	- Response Time		400 µs typ. (75% to 100% Load Step)

Safety Specifications

Standards	- IT / Multimedia Equipment		EN 60950-1 EN 62368-1 IEC 60950-1 IEC 62368-1 UL 60950-1 UL 62368-1
	- Certification Documents		www.tracopower.com/txm035-safety-cert/
Protection Class			Class I (Prepared): Connection to PE
		See application note:	www.tracopower.com/info/protection-class.pdf
Energy Source	- Output, acc. to 62368-1		ES1
Power Source	- Output, acc. to 62368-1		PS2
Pollution Degree			PD 2
Over Voltage Category			OVC II

All specifications valid at 230 VAC, resistive full load and +25°C after warm-up time, unless otherwise stated.

Downloaded from Arrow.com.

EMC Specifications

EMI (Emissions)	- Conducted Emissions		EN 55032 class A (internal filter)
			EN 55032 class B (internal filter)
	- Radiated Emissions		EN 55032 class A (internal filter)
			EN 55032 class B (internal filter)
	- Harmonic Current Emissions		EN 61000-3-2, class A
	- Voltage Fluctuations & Flicker		EN 61000-3-3
EMS (Immunity)			EN 55024 (IT Equipment)
			EN 55035 (Multimedia)
	- Electrostatic Discharge	Air:	EN 61000-4-2, ±8 kV, perf. criteria B
		Contact:	EN 61000-4-2, ±4 kV, perf. criteria B
	- RF Electromagnetic Field		EN 61000-4-3, 3 V/m, perf. criteria A
	- EFT (Burst) / Surge		EN 61000-4-4, ±1 kV, perf. criteria B
		L to L:	EN 61000-4-5, ±1 kV, perf. criteria B
		L to PE:	EN 61000-4-5, ±2 kV, perf. criteria B
	- Conducted RF Disturbances		EN 61000-4-6, 3 Vrms, perf. criteria A
	- PF Magnetic Field	Continuous:	EN 61000-4-8, 1 A/m, perf. criteria A
	- Voltage Dips & Interruptions	230 VAC / 50 Hz:	EN 61000-4-11
			30%, 25 periods, perf. criteria C
			>95%, 0.5 periods, perf. criteria B
			>95%, 250 periods, perf. criteria C

General Specifications

Relative Humidity		90% max. (non condensing)
Temperature Ranges	- Operating Temperature	–25°C to +70°C
	- Storage Temperature	–40°C to +85°C
Power Derating	- High Temperature	2.0 %/K above 50°C
Cooling System		Natural convection (20 LFM)
Altitude During Operation		5'000 m max.
Regulator Topology		Flyback Converter
Switching Frequency		65 kHz typ. (PWM)
Insulation System		Reinforced Insulation
Working Voltage (rated)		282 VAC
Isolation Test Voltage	- Input to Output, 60 s	4'000 VDC
	- Input to Case or PE, 60 s	2'500 VDC
Creepage	- Input to Output	6.1 mm min.
Clearance	- Input to Output	6.1 mm min.
Isolation Resistance	- Input to Output, 500 VDC	100 MΩ min.
Leakage Current	- Earth Leakage Current	3500 µA max.
	- Touch Current	250 µA max.
Reliability	- Calculated MTBF	200'000 h (MIL-HDBK-217F, ground benign)
Housing Material		Aluminum
Housing Type		Metal Case
Mounting Type		Chassis Mount
Connection Type		Screw Terminal
Weight		205 g
Environmental Compliance	- REACH Declaration	www.tracopower.com/info/reach-declaration.pdf
		REACH SVHC list compliant
		REACH Annex XVII compliant
	- RoHS Declaration	www.tracopower.com/info/rohs-declaration.pdf
		Exemptions: 7(a), 7(c)-I
		(RoHS exemptions refer to the component concentration only, not to the overall concentration in the product (O5A rule).)
	- SCIP Reference Number	d6b4b48a-92bd-42d7-a7e6-08dac2490823

All specifications valid at 230 VAC, resistive full load and +25°C after warm-up time, unless otherwise stated.

Downloaded from Arrow.com.

Additional Information

Supporting Documents	www.tracopower.com/overview/txm035
Frequently Asked Questions	www.tracopower.com/glossary-faq
Glossary	www.tracopower.com/info/glossary.pdf
Service Portal	www.tracoserviceportal.com

Outline Dimensions

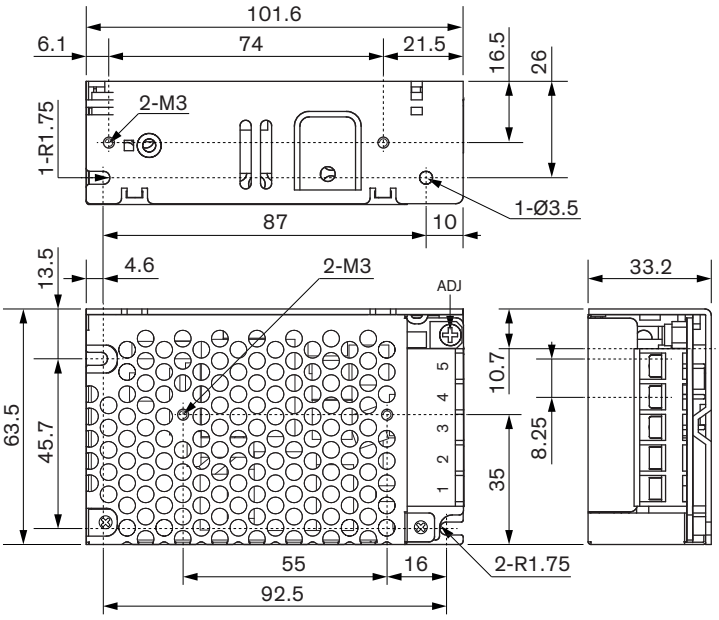

Dimensions in mm
Outer dimension tolerance: ±0.3
Mounting screw tightening torque: Max. 6.5 kgfcm
Mounting scren length: Max. 4

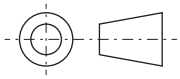

Pin-Out	
Pin	**Function**
1	AC (L)
2	AC (N)
3	PE
4	– Vout
5	+ Vout

Screw locked torque:
8.2 kgfcm (0.80 Nm) max.

© Copyright 2026 Traco Electronic AG Specifications can be changed without notice.

Downloaded from Arrow.com.