Overview

KEMET's F161 polyester (PET) film surface mount capacitor is encapsulated in a self-extinguishing material, meeting the requirements of UL 94 V–0. This series meets IEC 60384–19 standards, as well as the demanding Automotive Electronics Council's AEC–Q200 qualification.

Applications

Typical applications include bypassing and signal coupling. F161 is a general purpose series designed for the highest reliability.

Benefits

- Rated voltage: 50 – 630 VDC
- Rated voltage: 30 – 250 VAC
- Capacitance range: 0.01 – 12 µF
- EIA size: 2220 – 6560
- Capacitance tolerance: ±5%, ±10%, ±20%, other tolerances available on request
- Climatic category: 55/125/56
- RoHS Compliant and lead-free terminations
- Operating temperature range of −55°C to +125°C
- Automotive grade options available

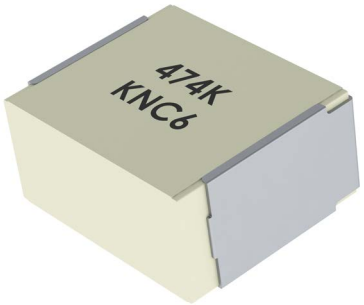

Part Number System

F	161	P	P	103	K	050	V
Capacitor Class	Series	Chip Size	Size Code	Capacitance Code (pF)	Capacitance Tolerance	Rated Voltage (VDC)	Packaging Code
F = Film	Metallized Polyester Stacked Technology	P = 2220 S = 2824 W = 4036 Y = 5045 Z = 6560	See Dimension Table	First two digits indicate the two most significant digits of the capacitance value in picofarads. The third digit is the number of following zeros.	J = ±5 K = ±10% M = ±20% Other tolerances on request.	050 = 50 063 = 63 100 = 100 250 = 250 400 = 400 630 = 630	See Ordering Options Table

Downloaded from Arrow.com.

Ordering Options Table

Chip Size (EIA)	Packaging Type	Packaging Code
2220	**Standard Packaging Options**	
	Tape & Reel (Standard Reel)	V
	Bulk (Bag)	A
2824	**Standard Packaging Options**	
	Tape & Reel (Standard Reel)	V
	Bulk (Bag)	A
4036	**Standard Packaging Options**	
	Tape & Reel (Standard Reel)	V
	Bulk (Bag)	A
	Other Packaging Options	
	Tape & Reel (Vertical Orientation Standard Reel)	Y
5045	**Standard Packaging Options**	
	Tape & Reel (Standard Reel)	V
	Bulk (Bag)	A
	Other Packaging Options	
	Tape & Reel (Vertical Orientation Standard Reel)	Y
6560	**Standard Packaging Options**	
	Tape & Reel (Standard Reel)	V
	Bulk (Bag)	A
	Other Packaging Options	
	Tape & Reel (Vertical Orientation Standard Reel)	Y

Downloaded from Arrow.com.

Dimensions – Millimeters

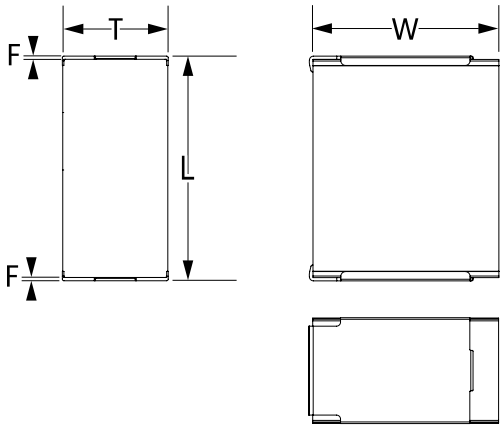

Size Code	Chip Size (EIA)	W		T		L		F	
		Nominal	Tolerance	Nominal	Tolerance	Nominal	Tolerance	Nominal	Tolerance
PP	2220	5.0	±0.2	3.0	±0.2	5.7	±0.2	0.5	Nominal
PU	2220	5.0	±0.2	4.0	±0.2	5.7	±0.2	0.5	Nominal
SL	2824	6.0	±0.2	3.0	±0.2	7.3	±0.2	0.5	Nominal
SP	2824	6.0	±0.2	3.5	±0.2	7.3	±0.2	0.5	Nominal
ST	2824	6.0	±0.2	4.5	±0.2	7.3	±0.2	0.5	Nominal
WP	4036	9.1	±0.2	5.5	±0.2	10.2	±0.2	0.5	Nominal
YR	5045	11.5	±0.2	6.5	±0.2	12.7	±0.2	0.5	Nominal
ZS	6560	15.0	±0.2	7.0	±0.2	16.5	±0.2	0.5	Nominal

Environmental Compliance

All KEMET surface mount capacitors are RoHS Compliant.

RoHS

Qualification

Automotive Grade products meet or exceed the requirements outlined by the Automotive Electronics Council. Details regarding test methods and conditions are referenced in document AEC–Q200, Stress Test Qualification for Passive Components. For additional information regarding the Automotive Electronics Council and AEC–Q200, please visit their website at www.aecouncil.com.

Downloaded from Arrow.com.

Performance Characteristics

Rated Voltage (VDC)	50	63	100	250	400	630
Rated Voltage (VAC)	30	40	63	160	200	250
Capacitance Range (µF)	0.01 – 12.0	0.01 – 4.7	0.01 – 4.7	0.01 – 1.0	0.022 – 0.47	0.1 – 0.18
Chip Size (EIA)	2220 – 6560					
Capacitance Tolerance	±5%, ±10%, ±20%, other tolerances available on request					
Category Temperature Range	−55°C to +125°C					
Rated Temperature	+85°C					
Voltage Derating	The rated voltage should be decreased by 1.25%/°C from +85°C to +125°C.					
Climatic Category	55/125/56					
Test Voltage	1.6 x V_R, 60 seconds					
Insulation Resistance	Measured at +20°C, Charging Time 1 Minute					
	Minimum Values Between Terminals					
	Charging Voltage		C ≤ 0.33 µF		C > 0.33 µF	
	10 V for V_R ≤ 100		1,000 MΩ		400 MΩ • µF	
	100 v for V_R > 100		1,000 MΩ		400 MΩ • µF	
Dissipation Factor	Maximum Values at +23°C					
		C ≤ 0.1 µF	0.1 < C < 1 µF	1 ≤ C ≤ 10 µF	C > 10 µF	
	1 kHz	0.8%	0.8%	0.8%	0.8%	
	10 kHz	1.2%	1.2%	1.5%	3.0%	
	100 kHz	2.5%	3.0%			
Maximum Pulse Rise Time	The capacitors can withstand an unlimited number of pulses with a dV/dt according to Table below.					
Voltage Range	50 VDC	63 VDC	100 VDC	250 VDC	400 VDC	630 VDC
dV/dt (V/µs)	40	40	50	150	200	250

Capacitance vs. Temperature

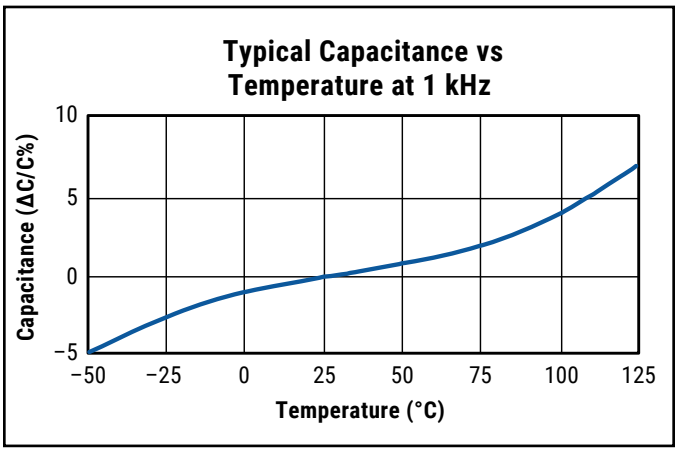

Dissipation Factor vs. Temperature

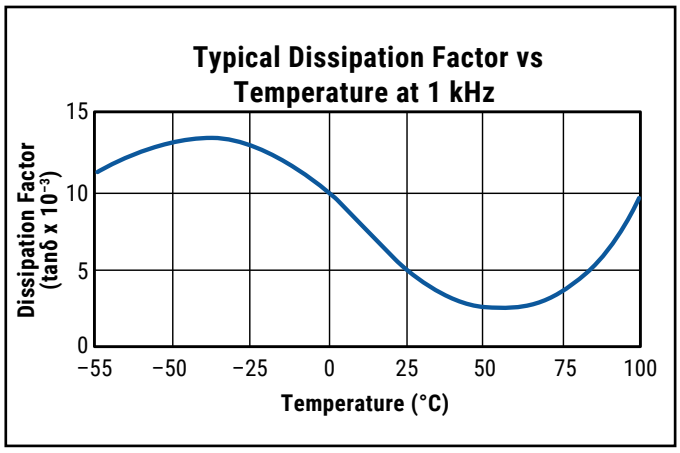

Downloaded from Arrow.com.

Table 1 – Ratings & Part Number Reference

VDC	VAC	Capacitance Value (µF)	Chip Size	Dimension in mm			dV/dt (V/µs)	Part Number
				B	H	L		
50	30	0.01	2220	5.0	3.0	5.7	40	F161PP103(1)050(2)
50	30	0.012	2220	5.0	3.0	5.7	40	F161PP123(1)050(2)
50	30	0.015	2220	5.0	3.0	5.7	40	F161PP153(1)050(2)
50	30	0.018	2220	5.0	3.0	5.7	40	F161PP183(1)050(2)
50	30	0.022	2220	5.0	3.0	5.7	40	F161PP223(1)050(2)
50	30	0.027	2220	5.0	3.0	5.7	40	F161PP273(1)050(2)
50	30	0.033	2220	5.0	3.0	5.7	40	F161PP333(1)050(2)
50	30	0.039	2220	5.0	3.0	5.7	40	F161PP393(1)050(2)
50	30	0.047	2220	5.0	3.0	5.7	40	F161PP473(1)050(2)
50	30	0.056	2220	5.0	3.0	5.7	40	F161PP563(1)050(2)
50	30	0.068	2220	5.0	3.0	5.7	40	F161PP683(1)050(2)
50	30	0.082	2220	5.0	3.0	5.7	40	F161PP823(1)050(2)
50	30	0.1	2220	5.0	3.0	5.7	40	F161PP104(1)050(2)
50	30	0.12	2220	5.0	3.0	5.7	40	F161PP124(1)050(2)
50	30	0.15	2220	5.0	3.0	5.7	40	F161PP154(1)050(2)
50	30	0.18	2220	5.0	4.0	5.7	40	F161PU184(1)050(2)
50	30	0.22	2220	5.0	4.0	5.7	40	F161PU224(1)050(2)
50	30	0.01	2824	6.0	3.0	7.3	40	F161SL103(1)050(2)
50	30	0.012	2824	6.0	3.0	7.3	40	F161SL123(1)050(2)
50	30	0.015	2824	6.0	3.0	7.3	40	F161SL153(1)050(2)
50	30	0.018	2824	6.0	3.0	7.3	40	F161SL183(1)050(2)
50	30	0.022	2824	6.0	3.0	7.3	40	F161SL223(1)050(2)
50	30	0.027	2824	6.0	3.0	7.3	40	F161SL273(1)050(2)
50	30	0.033	2824	6.0	3.0	7.3	40	F161SL333(1)050(2)
50	30	0.039	2824	6.0	3.0	7.3	40	F161SL393(1)050(2)
50	30	0.047	2824	6.0	3.0	7.3	40	F161SL473(1)050(2)
50	30	0.056	2824	6.0	3.0	7.3	40	F161SL563(1)050(2)
50	30	0.068	2824	6.0	3.0	7.3	40	F161SL683(1)050(2)
50	30	0.082	2824	6.0	3.0	7.3	40	F161SL823(1)050(2)
50	30	0.1	2824	6.0	3.0	7.3	40	F161SL104(1)050(2)
50	30	0.12	2824	6.0	3.0	7.3	40	F161SL124(1)050(2)
50	30	0.15	2824	6.0	3.0	7.3	40	F161SL154(1)050(2)
50	30	0.18	2824	6.0	3.0	7.3	40	F161SL184(1)050(2)
50	30	0.22	2824	6.0	3.0	7.3	40	F161SL224(1)050(2)
50	30	0.27	2824	6.0	3.5	7.3	40	F161SP274(1)050(2)
50	30	0.33	2824	6.0	3.5	7.3	40	F161SP334(1)050(2)
50	30	0.022	4036	9.1	5.5	10.2	40	F161WP223(1)050(2)
50	30	0.027	4036	9.1	5.5	10.2	40	F161WP273(1)050(2)
50	30	0.033	4036	9.1	5.5	10.2	40	F161WP333(1)050(2)
50	30	0.039	4036	9.1	5.5	10.2	40	F161WP393(1)050(2)
50	30	0.047	4036	9.1	5.5	10.2	40	F161WP473(1)050(2)
50	30	0.056	4036	9.1	5.5	10.2	40	F161WP563(1)050(2)
50	30	0.068	4036	9.1	5.5	10.2	40	F161WP683(1)050(2)
50	30	0.082	4036	9.1	5.5	10.2	40	F161WP823(1)050(2)
50	30	0.1	4036	9.1	5.5	10.2	40	F161WP104(1)050(2)
50	30	0.12	4036	9.1	5.5	10.2	40	F161WP124(1)050(2)
50	30	0.15	4036	9.1	5.5	10.2	40	F161WP154(1)050(2)
50	30	0.18	4036	9.1	5.5	10.2	40	F161WP184(1)050(2)
50	30	0.22	4036	9.1	5.5	10.2	40	F161WP224(1)050(2)
50	30	0.27	4036	9.1	5.5	10.2	40	F161WP274(1)050(2)
50	30	0.33	4036	9.1	5.5	10.2	40	F161WP334(1)050(2)
50	30	0.39	4036	9.1	5.5	10.2	40	F161WP394(1)050(2)
50	30	0.47	4036	9.1	5.5	10.2	40	F161WP474(1)050(2)
50	30	0.56	4036	9.1	5.5	10.2	40	F161WP564(1)050(2)
50	30	0.68	4036	9.1	5.5	10.2	40	F161WP684(1)050(2)
50	30	0.82	4036	9.1	5.5	10.2	40	F161WP824(1)050(2)
50	30	1	4036	9.1	5.5	10.2	40	F161WP105(1)050(2)
50	30	1.2	4036	9.1	5.5	10.2	40	F161WP125(1)050(2)
50	30	1.5	4036	9.1	5.5	10.2	40	F161WP155(1)050(2)
50	30	1.8	4036	9.1	5.5	10.2	40	F161WP185(1)050(2)
VDC	**VAC**	**Capacitance Value (µF)**	**Chip Size**	**B (mm)**	**H (mm)**	**L (mm)**	**dV/dt (Vµs)**	**Part Number**

(1) J = ±5%, K = ±10%, M = ±20%, other tolerances on request.

(2) Insert ordering code for lead type and packaging. See Ordering Options Table for available options.

Downloaded from Arrow.com.

Table 1 – Ratings & Part Number Reference cont.

VDC	VAC	Capacitance Value (µF)	Chip Size	Dimension in mm			dV/dt (V/µs)	Part Number
				B	H	L		
50	30	2.7	5045	11.5	6.5	12.7	40	F161YR275(1)050(2)
50	30	3.3	5045	11.5	6.5	12.7	40	F161YR335(1)050(2)
50	30	5.6	6560	15.0	7.0	16.5	40	F161ZS565(1)050(2)
50	30	6.8	6560	15.0	7.0	16.5	40	F161ZS685(1)050(2)
50	30	8.2	6560	15.0	7.0	16.5	40	F161ZS825(1)050(2)
63	40	0.01	2824	6.0	3.0	7.3	40	F161SL103(1)063(2)
63	40	0.012	2824	6.0	3.0	7.3	40	F161SL123(1)063(2)
63	40	0.015	2824	6.0	3.0	7.3	40	F161SL153(1)063(2)
63	40	0.018	2824	6.0	3.0	7.3	40	F161SL183(1)063(2)
63	40	0.022	2824	6.0	3.0	7.3	40	F161SL223(1)063(2)
63	40	0.027	2824	6.0	3.0	7.3	40	F161SL273(1)063(2)
63	40	0.033	2824	6.0	3.0	7.3	40	F161SL333(1)063(2)
63	40	0.039	2824	6.0	3.0	7.3	40	F161SL393(1)063(2)
63	40	0.047	2824	6.0	3.0	7.3	40	F161SL473(1)063(2)
63	40	0.056	2824	6.0	3.0	7.3	40	F161SL563(1)063(2)
63	40	0.068	2824	6.0	3.0	7.3	40	F161SL683(1)063(2)
63	40	0.082	2824	6.0	3.0	7.3	40	F161SL823(1)063(2)
63	40	0.1	2824	6.0	3.0	7.3	40	F161SL104(1)063(2)
63	40	0.12	2824	6.0	3.0	7.3	40	F161SL124(1)063(2)
63	40	0.15	2824	6.0	3.0	7.3	40	F161SL154(1)063(2)
63	40	0.18	2824	6.0	3.0	7.3	40	F161SL184(1)063(2)
63	40	0.22	2824	6.0	3.0	7.3	40	F161SL224(1)063(2)
63	40	0.27	2824	6.0	3.5	7.3	40	F161SP274(1)063(2)
63	40	0.33	2824	6.0	3.5	7.3	40	F161SP334(1)063(2)
63	40	0.022	4036	9.1	5.5	10.2	40	F161WP223(1)063(2)
63	40	0.027	4036	9.1	5.5	10.2	40	F161WP273(1)063(2)
63	40	0.033	4036	9.1	5.5	10.2	40	F161WP333(1)063(2)
63	40	0.039	4036	9.1	5.5	10.2	40	F161WP393(1)063(2)
63	40	0.047	4036	9.1	5.5	10.2	40	F161WP473(1)063(2)
63	40	0.056	4036	9.1	5.5	10.2	40	F161WP563(1)063(2)
63	40	0.068	4036	9.1	5.5	10.2	40	F161WP683(1)063(2)
63	40	0.082	4036	9.1	5.5	10.2	40	F161WP823(1)063(2)
63	40	0.1	4036	9.1	5.5	10.2	40	F161WP104(1)063(2)
63	40	0.12	4036	9.1	5.5	10.2	40	F161WP124(1)063(2)
63	40	0.15	4036	9.1	5.5	10.2	40	F161WP154(1)063(2)
63	40	0.18	4036	9.1	5.5	10.2	40	F161WP184(1)063(2)
63	40	0.22	4036	9.1	5.5	10.2	40	F161WP224(1)063(2)
63	40	0.27	4036	9.1	5.5	10.2	40	F161WP274(1)063(2)
63	40	0.33	4036	9.1	5.5	10.2	40	F161WP334(1)063(2)
63	40	0.39	4036	9.1	5.5	10.2	40	F161WP394(1)063(2)
63	40	0.47	4036	9.1	5.5	10.2	40	F161WP474(1)063(2)
63	40	0.56	4036	9.1	5.5	10.2	40	F161WP564(1)063(2)
63	40	0.68	4036	9.1	5.5	10.2	40	F161WP684(1)063(2)
63	40	0.82	4036	9.1	5.5	10.2	40	F161WP824(1)063(2)
63	40	1	4036	9.1	5.5	10.2	40	F161WP105(1)063(2)
63	40	1.2	4036	9.1	5.5	10.2	40	F161WP125(1)063(2)
63	40	1.5	4036	9.1	5.5	10.2	40	F161WP155(1)063(2)
63	40	1.8	5045	11.5	6.5	12.7	40	F161YR185(1)063(2)
63	40	2.2	5045	11.5	6.5	12.7	40	F161YR225(1)063(2)
63	40	2.7	5045	11.5	6.5	12.7	40	F161YR275(1)063(2)
63	40	3.3	5045	11.5	6.5	12.7	40	F161YR335(1)063(2)
63	40	3.9	6560	15.0	7.0	16.5	40	F161ZS395(1)063(2)
63	40	4.7	6560	15.0	7.0	16.5	40	F161ZS475(1)063(2)
100	63	0.01	2220	5.0	3.0	5.7	50	F161PP103(1)100(2)
100	63	0.012	2220	5.0	3.0	5.7	50	F161PP123(1)100(2)
100	63	0.015	2220	5.0	3.0	5.7	50	F161PP153(1)100(2)
100	63	0.018	2220	5.0	3.0	5.7	50	F161PP183(1)100(2)
100	63	0.022	2220	5.0	3.0	5.7	50	F161PP223(1)100(2)
100	63	0.027	2220	5.0	3.0	5.7	50	F161PP273(1)100(2)
VDC	**VAC**	**Capacitance Value (µF)**	**Chip Size**	**B (mm)**	**H (mm)**	**L (mm)**	**dV/dt (Vµs)**	**Part Number**

(1) J = ±5%, K = ±10%, M = ±20%, other tolerances on request.
(2) Insert ordering code for lead type and packaging. See Ordering Options Table for available options.

Downloaded from Arrow.com.

Table 1 – Ratings & Part Number Reference cont.

VDC	VAC	Capacitance Value (µF)	Chip Size	Dimension in mm			dV/dt (V/µs)	Part Number
				B	H	L		
100	63	0.033	2220	5.0	3.0	5.7	50	F161PP333(1)100(2)
100	63	0.039	2220	5.0	3.0	5.7	50	F161PP393(1)100(2)
100	63	0.047	2220	5.0	3.0	5.7	50	F161PP473(1)100(2)
100	63	0.056	2220	5.0	3.0	5.7	50	F161PP563(1)100(2)
100	63	0.068	2220	5.0	3.0	5.7	50	F161PP683(1)100(2)
100	63	0.082	2220	5.0	4.0	5.7	50	F161PU823(1)100(2)
100	63	0.1	2220	5.0	4.0	5.7	50	F161PU104(1)100(2)
100	63	0.01	2824	6.0	3.0	7.3	50	F161SL103(1)100(2)
100	63	0.012	2824	6.0	3.0	7.3	50	F161SL123(1)100(2)
100	63	0.015	2824	6.0	3.0	7.3	50	F161SL153(1)100(2)
100	63	0.018	2824	6.0	3.0	7.3	50	F161SL183(1)100(2)
100	63	0.022	2824	6.0	3.0	7.3	50	F161SL223(1)100(2)
100	63	0.027	2824	6.0	3.0	7.3	50	F161SL273(1)100(2)
100	63	0.033	2824	6.0	3.0	7.3	50	F161SL333(1)100(2)
100	63	0.039	2824	6.0	3.0	7.3	50	F161SL393(1)100(2)
100	63	0.047	2824	6.0	3.0	7.3	50	F161SL473(1)100(2)
100	63	0.056	2824	6.0	3.0	7.3	50	F161SL563(1)100(2)
100	63	0.068	2824	6.0	3.0	7.3	50	F161SL683(1)100(2)
100	63	0.082	2824	6.0	3.0	7.3	50	F161SL823(1)100(2)
100	63	0.1	2824	6.0	3.0	7.3	50	F161SL104(1)100(2)
100	63	0.12	2824	6.0	3.0	7.3	50	F161SL124(1)100(2)
100	63	0.15	2824	6.0	3.5	7.3	50	F161SP154(1)100(2)
100	63	0.18	2824	6.0	3.5	7.3	50	F161SP184(1)100(2)
100	63	0.22	2824	6.0	4.5	7.3	50	F161ST224(1)100(2)
100	63	0.022	4036	9.1	5.5	10.2	50	F161WP223(1)100(2)
100	63	0.027	4036	9.1	5.5	10.2	50	F161WP273(1)100(2)
100	63	0.033	4036	9.1	5.5	10.2	50	F161WP333(1)100(2)
100	63	0.039	4036	9.1	5.5	10.2	50	F161WP393(1)100(2)
100	63	0.047	4036	9.1	5.5	10.2	50	F161WP473(1)100(2)
100	63	0.056	4036	9.1	5.5	10.2	50	F161WP563(1)100(2)
100	63	0.068	4036	9.1	5.5	10.2	50	F161WP683(1)100(2)
100	63	0.082	4036	9.1	5.5	10.2	50	F161WP823(1)100(2)
100	63	0.1	4036	9.1	5.5	10.2	50	F161WP104(1)100(2)
100	63	0.12	4036	9.1	5.5	10.2	50	F161WP124(1)100(2)
100	63	0.15	4036	9.1	5.5	10.2	50	F161WP154(1)100(2)
100	63	0.18	4036	9.1	5.5	10.2	50	F161WP184(1)100(2)
100	63	0.22	4036	9.1	5.5	10.2	50	F161WP224(1)100(2)
100	63	0.27	4036	9.1	5.5	10.2	50	F161WP274(1)100(2)
100	63	0.33	4036	9.1	5.5	10.2	50	F161WP334(1)100(2)
100	63	0.39	4036	9.1	5.5	10.2	50	F161WP394(1)100(2)
100	63	0.47	4036	9.1	5.5	10.2	50	F161WP474(1)100(2)
100	63	0.56	4036	9.1	5.5	10.2	50	F161WP564(1)100(2)
100	63	0.68	4036	9.1	5.5	10.2	50	F161WP684(1)100(2)
100	63	0.82	4036	9.1	5.5	10.2	50	F161WP824(1)100(2)
100	63	1	4036	9.1	5.5	10.2	50	F161WP105(1)100(2)
100	63	1.2	5045	11.5	6.5	12.7	50	F161YR125(1)100(2)
100	63	1.5	5045	11.5	6.5	12.7	50	F161YR155(1)100(2)
100	63	1.8	5045	11.5	6.5	12.7	50	F161YR185(1)100(2)
100	63	2.2	6560	15.0	7.0	16.5	50	F161ZS225(1)100(2)
100	63	2.7	6560	15.0	7.0	16.5	50	F161ZS275(1)100(2)
100	63	3.3	6560	15.0	7.0	16.5	50	F161ZS335(1)100(2)
100	63	3.9	6560	15.0	7.0	16.5	50	F161ZS395(1)100(2)
100	63	4.7	6560	15.0	7.0	16.5	50	F161ZS475(1)100(2)
250	160	0.01	2824	6.0	3.0	7.3	150	F161SL103(1)250(2)
250	160	0.012	2824	6.0	3.0	7.3	150	F161SL123(1)250(2)
250	160	0.015	2824	6.0	3.0	7.3	150	F161SL153(1)250(2)
250	160	0.018	2824	6.0	3.0	7.3	150	F161SL183(1)250(2)
250	160	0.022	2824	6.0	3.0	7.3	150	F161SL223(1)250(2)
250	160	0.027	2824	6.0	3.5	7.3	150	F161SP273(1)250(2)
VDC	**VAC**	**Capacitance Value (µF)**	**Chip Size**	**B (mm)**	**H (mm)**	**L (mm)**	**dV/dt (Vµs)**	**Part Number**

(1) J = ±5%, K = ±10%, M = ±20%, other tolerances on request.
(2) Insert ordering code for lead type and packaging. See Ordering Options Table for available options.

Downloaded from Arrow.com.

Table 1 – Ratings & Part Number Reference cont.

VDC	VAC	Capacitance Value (µF)	Chip Size	Dimension in mm			dV/dt (V/µs)	Part Number
				B	H	L		
250	160	0.033	2824	6.0	3.5	7.3	150	F161SP333(1)250(2)
250	160	0.039	2824	6.0	3.5	7.3	150	F161SP393(1)250(2)
250	160	0.047	2824	6.0	4.5	7.3	150	F161ST473(1)250(2)
250	160	0.022	4036	9.1	5.5	10.2	150	F161WP223(1)250(2)
250	160	0.027	4036	9.1	5.5	10.2	150	F161WP273(1)250(2)
250	160	0.033	4036	9.1	5.5	10.2	150	F161WP333(1)250(2)
250	160	0.039	4036	9.1	5.5	10.2	150	F161WP393(1)250(2)
250	160	0.047	4036	9.1	5.5	10.2	150	F161WP473(1)250(2)
250	160	0.056	4036	9.1	5.5	10.2	150	F161WP563(1)250(2)
250	160	0.068	4036	9.1	5.5	10.2	150	F161WP683(1)250(2)
250	160	0.082	4036	9.1	5.5	10.2	150	F161WP823(1)250(2)
250	160	0.1	4036	9.1	5.5	10.2	150	F161WP104(1)250(2)
250	160	0.12	4036	9.1	5.5	10.2	150	F161WP124(1)250(2)
250	160	0.15	4036	9.1	5.5	10.2	150	F161WP154(1)250(2)
250	160	0.18	4036	9.1	5.5	10.2	150	F161WP184(1)250(2)
250	160	0.22	4036	9.1	5.5	10.2	150	F161WP224(1)250(2)
250	160	0.27	5045	11.5	6.5	12.7	150	F161YR274(1)250(2)
250	160	0.33	5045	11.5	6.5	12.7	150	F161YR334(1)250(2)
250	160	0.39	5045	11.5	6.5	12.7	150	F161YR394(1)250(2)
250	160	0.47	5045	11.5	6.5	12.7	150	F161YR474(1)250(2)
250	160	0.56	6560	15.0	7.0	16.5	150	F161ZS564(1)250(2)
250	160	0.68	6560	15.0	7.0	16.5	150	F161ZS684(1)250(2)
250	160	0.82	6560	15.0	7.0	16.5	150	F161ZS824(1)250(2)
250	160	1	6560	15.0	7.0	16.5	150	F161ZS105(1)250(2)
400	200	0.022	4036	9.1	5.5	10.2	200	F161WP223(1)400(2)
400	200	0.027	4036	9.1	5.5	10.2	200	F161WP273(1)400(2)
400	200	0.033	4036	9.1	5.5	10.2	200	F161WP333(1)400(2)
400	200	0.039	4036	9.1	5.5	10.2	200	F161WP393(1)400(2)
400	200	0.047	4036	9.1	5.5	10.2	200	F161WP473(1)400(2)
400	200	0.056	4036	9.1	5.5	10.2	200	F161WP563(1)400(2)
400	200	0.068	4036	9.1	5.5	10.2	200	F161WP683(1)400(2)
400	200	0.082	5045	9.1	5.5	10.2	200	F161WP823(1)400(2)
400	200	0.1	5045	11.5	6.5	12.7	200	F161YR104(1)400(2)
400	200	0.12	5045	11.5	6.5	12.7	200	F161YR124(1)400(2)
400	200	0.15	5045	11.5	6.5	12.7	200	F161YR154(1)400(2)
400	200	0.18	5045	11.5	6.5	12.7	200	F161YR184(1)400(2)
400	200	0.22	6560	15.0	7.0	16.5	200	F161ZS224(1)400(2)
400	200	0.27	6560	15.0	7.0	16.5	200	F161ZS274(1)400(2)
400	200	0.33	6560	15.0	7.0	16.5	200	F161ZS334(1)400(2)
400	200	0.39	6560	15.0	7.0	16.5	200	F161ZS394(1)400(2)
400	200	0.47	6560	15.0	7.0	16.5	200	F161ZS474(1)400(2)
630	250	0.1	6560	15.0	7.0	16.5	250	F161ZS104(1)630(2)
630	250	0.12	6560	15.0	7.0	16.5	250	F161ZS124(1)630(2)
630	250	0.15	6560	15.0	7.0	16.5	250	F161ZS154(1)630(2)
630	250	0.18	6560	15.0	7.0	16.5	250	F161ZS184(1)630(2)
VDC	**VAC**	**Capacitance Value (µF)**	**Chip Size**	**B (mm)**	**H (mm)**	**L (mm)**	**dV/dt (Vµs)**	**Part Number**

(1) J = ±5%, K = ±10%, M = ±20%, other tolerances on request.
(2) Insert ordering code for lead type and packaging. See Ordering Options Table for available options.

Downloaded from Arrow.com.

Soldering Process

Reflow soldering temperature is measured on the top surface of the component: Preheating temperature should be less than 170°C. The time above 217°C should be less than 50 seconds. The peak temperature must not exceed 240°C.

Reflow	
Test Conditions	See Solder Process
Performance	
Capacitance Change |Δ C/C|	≤ 3%

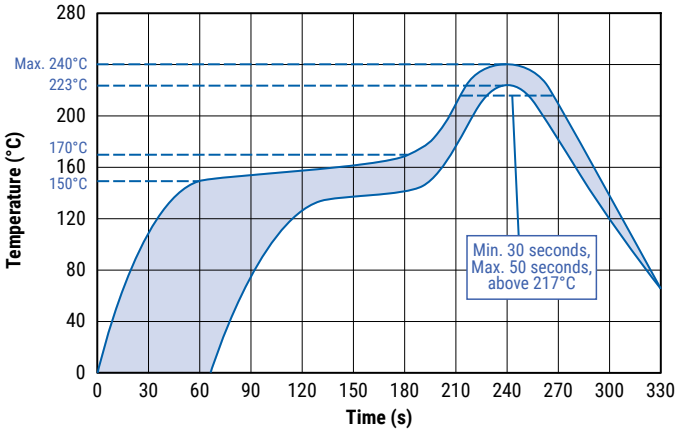

Construction

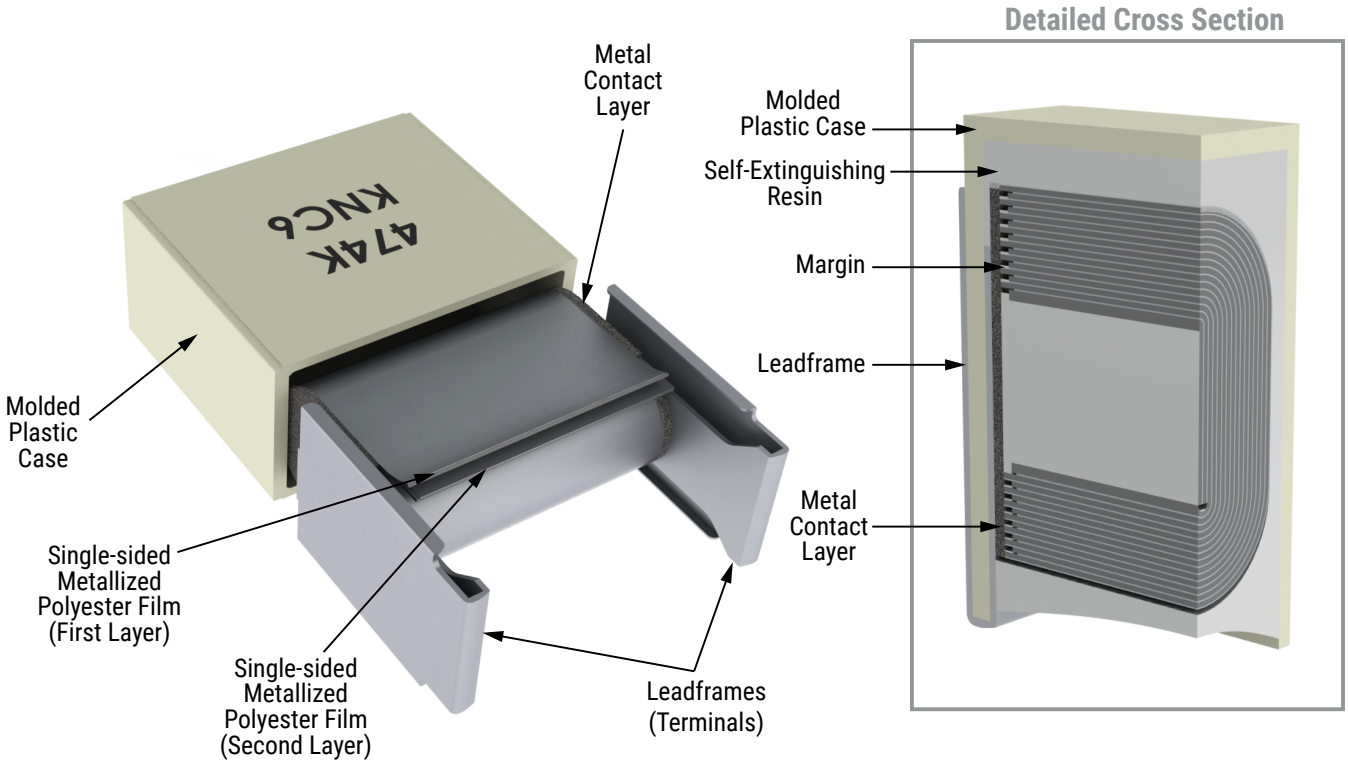

Downloaded from Arrow.com.

Marking

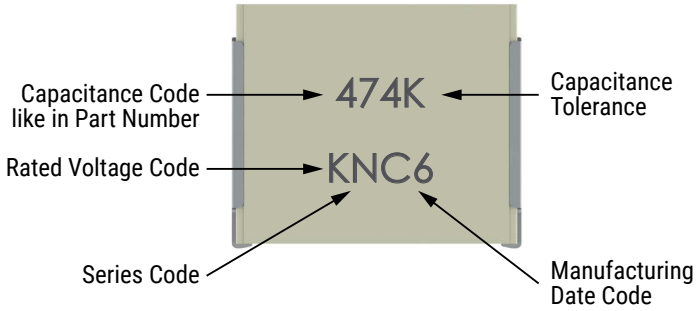

Rated Voltage	Code
50 VDC	Z
63 VDC	C
100 VDC	D
250 VDC	H
400 VDC	K
630 VCD	M

Manufacturing Date Code (IEC 60062)			
Year	Code	Month	Code
2020	M	January	1
2021	N	February	2
2022	P	March	3
2023	R	April	4
2024	S	May	5
2025	T	June	6
2026	U	July	7
2027	V	August	8
2028	W	September	9
2029	X	October	O
2030	A	November	N
2031	B	December	D
2032	C		
2033	D		
2034	E		
2035	F		
2036	H		
2037	J		
2038	K		
2039	L		
2040	M		

Flux & Cleaning

KEMET recommends using a no-clean flux with a halogen content lower than 0.1%.

To clean the PCB assembly KEMET recommends to use a suitable solvent like Isopropyl alcohol, deionized water, or neutral pH detergents. Aggressive solvents shall not be used. For any different cleaning solvent used please contact KEMET Technical Services to analyze the potential impact on KEMET products.

Downloaded from Arrow.com.

Storage and Moisture Recommendations

KEMET SMD Film Capacitors are supplied in a MBB (Moisture Barrier Bag) Class 1. We can guarantee a 24 month shelf life (temperature ≤ 40°C/relative humidity ≤ 90%). After the MBB has been opened, components may stay in areas with controlled temperature and humidity (temperature ≤ 30°C/relative humidity ≤ 60%) for 168 hours [MSL 3]. For longer periods of time and/or higher temperature and/or higher relative humidity values, it is absolutely necessary to protect the components against humidity. If the reel inside the MBB is partially used, KEMET recommends to re-use the same MBB or to avoid areas without controlled temperature and humidity (see above). If the above conditions are not respected, components require a baking (minimum time: 48 hours at 55 ±5°C) before the reflow.

Packaging Quantities

Chip Size (EIA)	Size Code	Base (mm)	Height (mm)	Length (mm)	Bulk	Reel Horizontal Orientation	Reel Vertical Orientation
2220	PP	5.0	3.0	5.7	2,000	2,400	
2220	PU	5.0	4.0	5.7	2,000	2,100	
2824	SL	6.0	3.0	7.3	2,000	2,500	
2824	SP	6.0	3.5	7.3	2,000	2,300	
2824	ST	6.0	4.5	7.3	1,000	1,700	
4036	WP	9.1	5.5	10.2	1,000	800	500
5045	YR	11.5	6.5	12.7	1,000	600	400
6560	ZS	15.0	7.0	16.5	800	500	200

Landing

Mounting	Chip Size	Dimensions in mm		
		A	B	X
Horizontal	2220	5.1	1.5	3.0
	2824	6.1	1.5	3.8
	4036	9.1	2.0	5.5
	5045	11.6	2.5	7.0
	6560	15.0	3.0	9.0
Vertical	4022	5.6	2.0	5.5
	5026	6.6	2.5	7.0
	6528	7.1	3.0	9.0

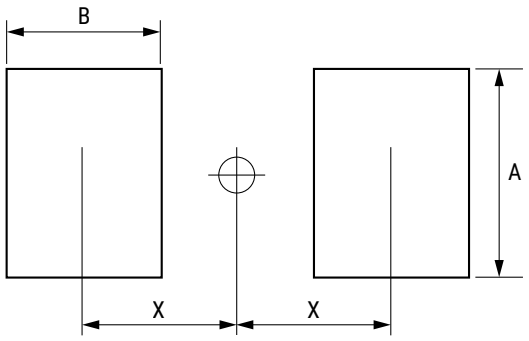

Downloaded from Arrow.com.

Carrier Taping & Packaging (IEC 60286–2)

Horizontal Taping Orientation

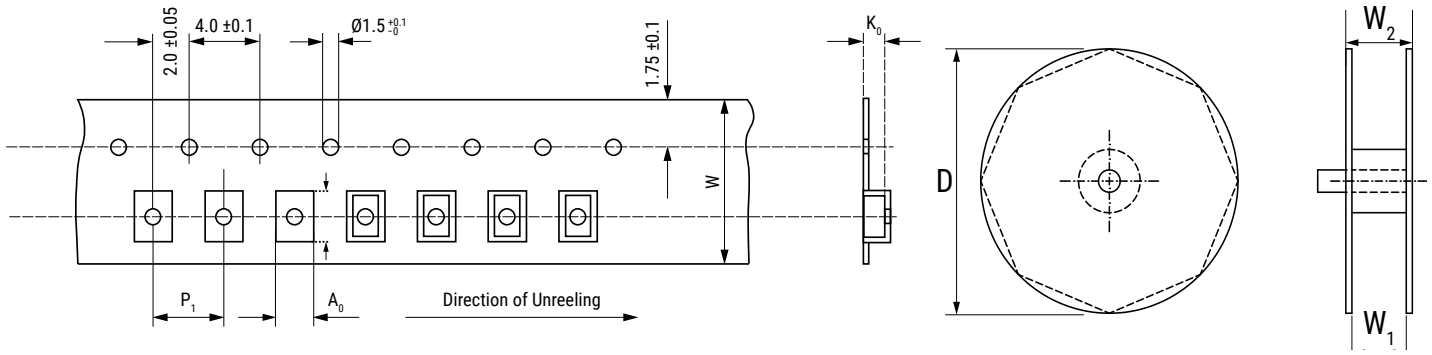

EIA Size Code Horizontal Mounting	Size Code	Dimensions in mm			Taping Specification							
		B	H	L	W	P_1	A_0	B_0	K_0	D	W_1	W_2
		Nominal	Nominal	Nominal	−0/+0.3	±0.1	Nominal	Nominal	Nominal	±2.0	−0/+2	Maximum
2220	PP	5.0	3.0	5.7	12.0	8.0	5.5	6.0	3.3	330	12.4	22.0
2220	PU	5.0	4.0	5.7	12.0	8.0	5.5	6.0	4.3	330	12.4	22.0
2824	SL	6.0	3.0	7.3	12.0	8.0	6.5	7.5	3.3	330	12.4	22.0
2824	SP	6.0	3.5	7.3	12.0	8.0	6.5	7.5	3.8	330	12.4	22.0
2824	ST	6.0	4.5	7.3	16.0	8.0	6.6	7.9	5.5	330	16.4	22.0
4036	WP	9.1	5.5	10.2	16.0	16.0	9.5	10.5	5.8	330	16.4	22.0
5045	YR	11.5	6.5	12.7	24.0	16.0	11.9	13.1	6.8	330	24.4	30.0
6560	ZS	15.0	7.0	16.5	24.0	20.0	15.4	16.8	7.3	330	24.4	30.0

Downloaded from Arrow.com.

Carrier Taping & Packaging (IEC 60286–2) cont.

Vertical Taping Orientation

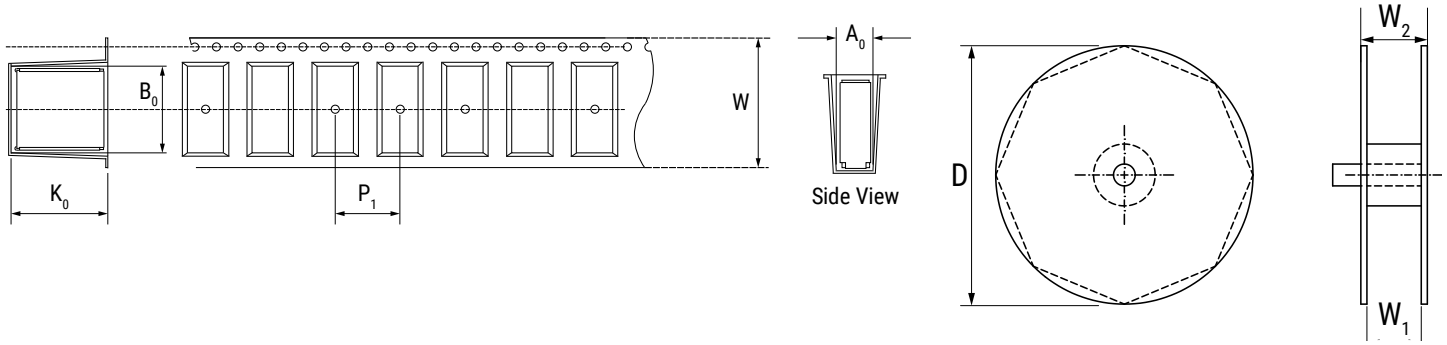

Size Code Vertical Mounting	Size Code	Dimensions in mm			Taping Specification							
		B	H	L	W	P_1	A_0	B_0	K_0	D	W_1	W_2
		Nominal	Nominal	Nominal	−0/+0.3	±0.1	Nominal	Nominal	Nominal	±2.0	−0/+2	Maximum
4022	WP	5.5	9.1	10.2	24.0	16.0	6.0	10.5	9.3	330	24.4	30.0
5026	YR	6.5	11.5	12.7	24.0	16.0	6.9	13.1	11.8	330	24.4	30.0
6528	ZS	7.0	15.0	16.5	44.0	20.0	7.5	17.0	15.3	330	44.5	49.5
Note: Chip dimensions B and H correspond to dimensions H and B in the horizontal mounting table.												

Downloaded from Arrow.com.

KEMET Electronics Corporation Sales Offices

For a complete list of our global sales offices, please visit https://www.yageogroup.com/SalesResources/SalesOffices

Disclaimer

YAGEO Corporation and its affiliates do not recommend the use of commercial or automotive grade products for high reliability applications or manned space flight.

All product specifications, statements, information and data (collectively, the "Information") in this datasheet are subject to change. The customer is responsible for checking and verifying the extent to which the Information contained in this publication is applicable to an order at the time the order is placed. All Information given herein is believed to be accurate and reliable, but it is presented without guarantee, warranty, or responsibility of any kind, expressed or implied.

Statements of suitability for certain applications are based on KEMET Electronics Corporation's ("KEMET") knowledge of typical operating conditions for such applications, but are not intended to constitute – and KEMET specifically disclaims – any warranty concerning suitability for a specific customer application or use. The Information is intended for use only by customers who have the requisite experience and capability to determine the correct products for their application. Any technical advice inferred from this Information or otherwise provided by KEMET with reference to the use of KEMET's products is given gratis, and KEMET assumes no obligation or liability for the advice given or results obtained.

Although KEMET designs and manufactures its products to the most stringent quality and safety standards, given the current state of the art, isolated component failures may still occur. Accordingly, customer applications which require a high degree of reliability or safety should employ suitable designs or other safeguards (such as installation of protective circuitry or redundancies) in order to ensure that the failure of an electrical component does not result in a risk of personal injury or property damage.

Although all product–related warnings, cautions and notes must be observed, the customer should not assume that all safety measures are indicated or that other measures may not be required.

Additional information about production site flexibility can be found <here>

KEMET is a registered trademark of KEMET Electronics Corporation.

Downloaded from Arrow.com.